TOWN OF CALEDON
PLANNING
RECEIVED

Jul 12, 2021

The Manors of Belfountain Corp.

REVISED HYDROGEOLOGICAL INVESTIGATION REPORT

Manors of Belfountain, Caledon, ON

COLE ENGINEERING GROUP LTD.

HEAD OFFICE
70 Valleywood Drive, Markham, ON Canada L3R 4T5
T. 905 940 6161 | 416 987 6161 F. 905 940 2064
www.coleengineering.ca

MAY 2020

TOWN OF CALEDON
PLANNING
RECEIVED

Jul 12, 2021

May 29, 2020
Reference No. 2017-0646

The Manors of Belfountain Corp
7681 Highway 27, Unit 16
Woodbridge, ON L4L 455

Attention: **John Spina**

Re: **Manors of Belfountain, Caledon, ON**
Revised Hydrogeological Investigation Report

Dear Mr. Spina,

Cole Engineering Group Ltd. (COLE) is pleased to submit the enclosed revised hydrogeological investigation report for the development Lot 9, Concession 5 in Caledon, ON. The investigation provides an update to COLE's 2018 Hydrogeological Investigation Report based on additional field work and analysis completed to address applicable agency review comments on the 2018 report.

Should you have any questions or comments, please do not hesitate to contact the undersigned.

Best Regards,
COLE ENGINEERING GROUP LTD.

Steve Davies, M.Sc., P.Geo.
Senior Hydrogeologist

/az/ks

COLE ENGINEERING GROUP LTD.

HEAD OFFICE
70 Valleywood Drive, Markham, ON Canada L3R 4T5
T. 905 940 6161 | 416 987 6161 **F.** 905 940 2064
www.coleengineering.ca

2018 SME CANADA'S TOP SMALL & MEDIUM EMPLOYERS

TOWN OF CALEDON
PLANNING
RECEIVED

Jul 12, 2021

PREPARED BY:

COLE ENGINEERING GROUP LTD.

Aron Zhao
Environmental Specialist

LICENSED PROFESSIONAL ENGINEER
A. E. ZHAO
100554915
Dec 1, 2020
PROVINCE OF ONTARIO

CHECKED BY:

COLE ENGINEERING GROUP LTD.

Steve Davies, M.Sc., P.Geo.
Senior Manager – Environmental Geoscience

AUTHORIZED FOR ISSUE BY:

COLE ENGINEERING GROUP LTD.

Muin Husain, Ph.D., P.Geo.
Vice President – Environment and Energy

Issues and Revisions Registry

Identification	Date	Description of issued and/or revision
Draft Report	May 8, 2020	For client review
Revised Draft Report	As of May 29, 2020	For client review

TOWN OF CALEDON
PLANNING
RECEIVED

Jul 12, 2021

Statement of Conditions

This Report / Study (the "Work") has been prepared at the request of, and for the exclusive use of, The Manors of Belfountain Corp "The Manors "and its affiliates (the "Intended User"). No one other than the Intended User has the right to use and rely on the Work without first obtaining the written authorization of Cole Engineering Group Ltd. and The Manors. Cole Engineering Group Ltd. expressly excludes liability to any party except the Intended User for any use of, and/or reliance upon, the work. Reliance is extended to review agencies such as Niagara Escarpment Commission, Town of Caledon, Credit Valley Conservation, and the Regional Municipality of Peel.

Neither possession of the Work, nor a copy of it, carries the right of publication. All copyright in the Work is reserved to Cole Engineering Group Ltd. The Work shall not be disclosed, produced or reproduced, quoted from, or referred to, in whole or in part, or published in any manner, without the express written consent of Cole Engineering Group Ltd. and or the Manors.

TOWN OF CALEDON
PLANNING
RECEIVED

Jul 12, 2021

Table of Contents

Transmittal Letter
Table of Contents

1 Introduction 1
1.1 Project Description 1
1.2 Objectives 1
1.3 Applicable Regulations and Agencies 2

2 Regional Geological and Hydrogeological Understanding 4
2.1 Topography and Drainage 4
2.2 Physiography 4
2.3 Regional Geology and Hydrogeology 5
2.4 Source Protection Plan Considerations 9

3 Natural Heritage 9
3.1 Water Courses 9
3.2 Wetlands 10

4 Site Investigations 10
4.1 Previous Investigations 10
4.2 COLE Investigations 12

5 Local Geological and Hydrogeological Conditions 15
5.1 Topography and Physiography 15
5.2 Geology 15
5.3 Hydraulic Conductivity 16
5.4 Infiltration Rates 17
5.5 Groundwater Levels 19
5.6 Groundwater Flow and Hydraulic Gradients 22
5.7 Groundwater Quality 22
5.8 Groundwater – Surface Water Interactions 27
5.9 MECP Well Records 29

6 Impact Assessment 29
6.1 Water Balance 29
6.2 Water Quality Impact Assessment 33
6.3 Water Supply 37

7 Receptors and Impacts 43
7.1 Surrounding Groundwater Users 43
7.2 Natural Features 44

8 Summary 46

9 Recommendations 49

10 References 50

TOWN OF CALEDON
PLANNING
RECEIVED

Jul 12, 2021

LIST OF TABLES

Table 2.1 Orangeville Groundwater Takings (Town of Orangeville, 2016) 7
Table 2.2 Mono Groundwater Takings (Town of Orangeville, 2017) 8
Table 2.3 Erin Groundwater Takings (Town of Erin, 2017) 8
Table 2.4 Hillsburgh Groundwater Takings (Town of Erin, 2017) 8
Table 2.5 Caledon Village Groundwater Takings (Regional Municipality of Peel, 2015) 9
Table 2.6 Alton Groundwater Takings (Regional Municipality of Peel, 2015) 9
Table 4.1 Monitoring Well Details 13
Table 5.1 Summary of Geologic Units at the Site 15
Table 5.2 Estimated Transmissivity and Hydraulic Conductivity 17
Table 5.3 Infiltration Test Results 17
Table 5.4 Infiltration Testing Results (November 2019) 18
Table 5.5 Groundwater Level Measurements 21
Table 5.6 Select Groundwater Quality Results from March 2020 24
Table 5.7 Select Groundwater Quality Results from March, 2020 Continued 25
Table 5.8 Nitrate Concentrations on-site 26
Table 5.9 Summary of MECP Well Records within a 500 m Radius Around the Site 29
Table 6.1 Summary of Infiltration Factors and Soil Moisture Capacity 31
Table 6.2 Results of Pre-Development Water Balance Analysis for 2010-2015 31
Table 6.3 Results of Pre-Development Water Balance Analysis for 1981 to 2010 31
Table 6.4 Post-Development summary of Infiltration Factors and Soil Moisture Capacity 32
Table 6.5 Results of Post-Development Water Balance Analysis for 2010-2015 32
Table 6.6 Maximum Calculated Chloride Concentration Post-Development 36
Table 6.7 Pumping Test Results and Estimated Long Term Drawdown 39
Table 6.8 Calculated Safe Yield (m^3/day) 41
Table 7.1 Distance from Receptors to Closest on-site Supply Well 44

LIST OF FIGURES

Figure 1 Site Location
Figure 2 Regional Topography
Figure 3 Physiography
Figure 4 Overburden Geology
Figure 5 Bedrock Geology
Figure 6 Depth to Bedrock
Figure 7 Boreholes, Wells, and Other Monitoring Locations
Figure 8 Cross-Section Plan
Figure 9 Cross-Section A
Figure 10 Cross-Section B
Figure 11 Infiltration Testing Location
Figure 12 Depth to Groundwater
Figure 13 Groundwater Elevation Contours
Figure 14 Average 2015-2020 Nitrate Concentrations
Figure 15 MECP Well Records

TOWN OF CALEDON
PLANNING
RECEIVED

Jul 12, 2021

APPENDICES

Appendix A	Draft Plan of Subdivision
Appendix B	Borehole Logs
Appendix C	Drawdown-time Curves
Appendix D	Infiltration Data
Appendix E	Hydrographs
Appendix F	Groundwater Quality
Appendix G	Certificates of Analysis
Appendix H	Typical Water and Wastewater Treatment Systems
Appendix I	MECP Well Records Search
Appendix J	Water Balance Analysis
Appendix K	Caledon Road Salt Management Plan
Appendix L	Pumping Test Data
Appendix M	Long-term Safe-Yield Analysis
Appendix N	Radius of Influence Analysis

TOWN OF CALEDON
PLANNING
RECEIVED

Jul 12, 2021

Executive Summary

Cole Engineering Group Ltd. (COLE) was retained by The Manors of Belfountain Corp ("The Manors ") in 2017 to undertake a hydrogeological study in support of a proposed residential development located at part of Lot 9, Concession 5 in Caledon, ON (the "Site"). The results of that investigation were provided in a Hydrogeological Investigation Report, dated February 13, 2018. The report was provided to the Town of Caledon, the Region of Peel, the Credit Valley Conservation, the Niagara Escarpment Commission, and the Belfountain Community Organization for review and comment. In addition, the Town of Caledon retained Terra-Dynamics Consulting Inc. to complete an independent third-party review of the 2018 report. The present report provides the results of additional field work and analysis that was completed to address the various review comments received.

The Site is approximately 70.28 hectares (ha) in area and is currently used for agricultural purposes. It is generally bounded by Bush Street to the north, Shaws Creek Road to the west, Mississauga Road to the east, and vacant lands to the south.

The Belfountain Public School and a number of existing residential properties are located northwest of the Site. The Site is located within the jurisdiction of the Credit Valley Conservation Authority (CVC). Based on the Draft Plan of Subdivision 21T-91015C dated April 24, 2020, prepared by Nicole Yang of MDTR GROUP, the development will include 75 rural estate lots with an average lot size of 0.4 ha. Water supply will be provided by private wells and wastewater servicing will be provided by individual septic systems with tertiary (Level IV) treatment. The stormwater management plan for the Site will rely on retention and infiltration to match existing conditions.

Previous Site investigations date back to 1988 and include work done by Terraprobe, W.B. Beatty & Associates Limited, Winter Associates, and R.J. Burnside. These investigations included the drilling of monitoring wells, pumping tests, a water supply and wastewater servicing review, groundwater level monitoring and sampling, infiltration tests, and a well survey of nearby properties. Since October 2017, COLE conducted a hydrogeological investigation consisting of groundwater level measurements, groundwater sampling, water balance analysis, nitrate loading assessment, and the assessment of water taking rates and analysis of pumping tests.

The Site is located within the West Credit River Subwatershed and is considered to be within the Horseshoe Moraine physiographic region due to the sand content and hummocky nature of the topography. Geology at the Site consists of approximately 10 m to 20 m of sandy overburden overlying the Amabel Formation dolostone aquifer, which overlies the Cabot Head shale aquitard.

Hydraulic conductivity estimates of the dolostone bedrock aquifer range from $4.7x10^{-6}$ m/s to $2.9x10^{-4}$ m/s with an average of $3.6x10^{-5}$ m/s. Based on testing completed at the Site by R.J. Burnside, infiltration rates for the overburden range from 29 mm/hr to 420 mm/hr with an average of approximately 152 mm/hr. Supplementary infiltration field data, completed by COLE in November 2019, identified an average infiltration rate of 100 mm/hr in the shallow overburden at the Site. The 2014 and 2019 infiltration test data suggest that Wentworth Till deposits may underlie the glaciofluvial outwash material in locations at, or near, ground surface across the southernmost 100 m to 150 m of the Site boundaries. Locations underlain by these till deposits exhibited lower percolation rates than locations underlain strictly by the more permeable sand and gravel. It is noted that even within each depositional soil type (e.g. sand and gravel), local variability is common in glacial sediments.

Water levels measured in October 2017 and March 2020 indicate that groundwater across the Site is typically 10 to 20 m below ground surface (mbgs) with the exception of the on-site wetland features (SWT3-2 and MAS3-1) located at a topographically lower elevation north of the developable area, where groundwater is typically between 0 to 1 mbgs. Seasonal groundwater fluctuations across the Site are

TOWN OF CALEDON
PLANNING
RECEIVED

Jul 12, 2021

typically not greater than 3 m, with decreasing water levels in the summer and fall months. In general, groundwater elevations are higher in the south and groundwater movement is approximately south to north across the Site.

Groundwater discharge is expected to occur at the West Credit River and the off-Site wetland features (SWM1-1 and MAM3-1). However, no on-site water courses or wetland features (e.g., RB1, SWT3-2, and MAS3-1) were interpreted to receive groundwater discharge. Groundwater in the area of the proposed SWM ponds ranges from 10 – 20 mbgs and, as such, groundwater discharge is not occurring in these areas.

A pre-development Site water balance analysis was completed, and results indicate that infiltration comprises approximately 30% of the total precipitation across the Site, runoff comprises approximately 9% of total precipitation, and evapotranspiration comprises more than half (61%) of total precipitation. The water balance analysis shows a significant amount of infiltration, which is to be expected due to the closed depressions within the hummocky topography and sandy overburden materials.

A post-development water balance shows that the proposed development will result in an estimated 16% reduction in infiltration across the Site. It is understood that infiltration measures will be utilized to maintain pre-development infiltration on-site, with essentially no runoff leaving the Site up to two (2) back to back 100 year storm events in the post-development conditions. To achieve this, two (2) stormwater management ponds designed to infiltrate back-to-back 100-year events are currently proposed for the development.

Groundwater quality analysis was conducted at twelve (12) on-site wells and results identified total coliform bacteria in five (5) of the twelve (12) test wells. None of the twelve (12) groundwater samples analyzed for E. Coli detected the presence of fecal contamination at the Site, which is considered to be a more reliable indicator of contamination. In addition, there were no detectable concentrations of pesticides and herbicides in groundwater quality samples collected from four (4) test wells located within the agricultural areas. This suggests that historical on-site and neighboring agricultural activities have not negatively impacted groundwater quality at the Site.

No other exceedances of health-related Ontario Drinking Water Standards (ODWS) were identified, however there were some exceedances in total hardness, total dissolved solids, sulphate, turbidity, and iron. These parameters, with the exception of hardness, are considered aesthetic parameters that affect the taste, odour or colour of water but do not directly affect the safety of the water supply. Water hardness at the Site and aesthetic parameters can be controlled with water treatment systems for each property.

Nitrate concentrations in groundwater at the Site meet the ODWS of 10 mg/L. Nitrate concentrations generally increase from south to north across the Site, with the existing nitrate concentrations likely due to agricultural activities both on and off-Site. Wells with higher nitrate concentration are hydrogeologically downgradient of the largest agricultural area. Development of the Site will result in a reduction of the agricultural areas interpreted of contributing to the on-site nitrate concentrations by approximately 68%, which corresponds to the available area of agricultural land on and upgradient of the Site being converted from agricultural use to domestic use. It is noted that only the current agricultural land to the southeast is located upgradient of the Site and is considerably smaller in area than the Site, thus a change of land use to residential should eliminate approximately two thirds of the agricultural fertilizer inputs to the groundwater at the Site. Therefore, development of the Site is expected to lead to a long-term decrease in nitrate concentrations. Evidence from similar development projects in the local geological area suggest that the anticipated natural nitrate concentration reduction may be close to an order of magnitude (90%).

A nitrate loading analysis was completed in compliance with MOECC Procedure D-5-4 in order to evaluate the potential impact of the individual on-site septic systems. Results indicate that a nitrate loading

TOWN OF CALEDON
PLANNING
RECEIVED
Jul 12, 2021

concentration of approximately 2.52 mg/L is expected at the Site boundary. This concentration is lower than the CCME guideline for NO_3-as-N of 3 mg/L for protection of sensitive surface water habitat, which has also been adopted by CVC. As on-site wetland features (SWT3-2 and MAS3-1) are essentially at the Site boundary, and any groundwater seepage locations appear to be beyond the Site boundary, the CCME / CVC guideline is therefore met at all downgradient natural features that may receive even minimal groundwater discharge.

Although existing on-site nitrate concentrations in groundwater are consistently below the ODWS, as a precautionary approach it is recommended that supply wells should not be installed in the northernmost portion of the Site where the highest on-site nitrate concentration were identified. It is therefore recommended that supply wells not be placed north or east of an identified line of higher nitrate concentrations (i.e., > 7 mg/L) and that any wells be located a minimum of 7 m south (upgradient) of this line, based on a radius of contribution analysis. Review of the Draft Plan for the Site confirms that there is sufficient room to locate supply wells on every lot in compliance with this recommendation.

Pumping tests to assess the supply of groundwater available at the Site were completed at the Site by R.J. Burnside and are considered to demonstrate water supply compliance with MOECC Procedure D-5-5. Water supply analysis based on the pumping test results indicate that all tested wells can sustainably support continuous pumping at the expected average pumping rate of 1.56 L/min/house for a duration of 50 years. In addition, a more conservative analysis indicates that most tested wells can sustainably support continuous pumping at the peak pumping rate of 18.75 L/min/house for a duration of 50 years. The total water takings expected at the Site, based on an average pumping rate of 1.56 L/min/house and 75 houses, is 168,750 L/day, which is a small portion of the estimated recharge across the Site (519,784 L/day). The proposed water taking was also reviewed using two “safe yield” analytical techniques that showed that the Site wells that were installed to sufficient depth within the Amabel Formation could theoretically continuous pumping at the peak pumping rates for 20 years.

Higher summer demand pumping rates were reviewed using data provided from a 2010 Town of Carlisle water supply study, which indicated that the summer maximum day flow rates ranged from 2.1 to 3.3 times the average daily flow ratees. Using a conservative 3.3 rate, the calculated rate for the Site was calculated to be 7.425 m^3/day, which is far less than the calculated safe yields across the Site. Based on this analysis, the underlying Amabel Formation aquifer has been demonstrated to be able to adequately support the higher summer rates at all locations. However, the use of cisterns and drought resistant grasses shall be enforced through the design guidelines for the Site to reduce potential summer demand pumping.

Based on the estimated long-term average pumping rate of 1.56 L/min/house and the effect of recharge on groundwater quantity, the expected radius of influence for each well is estimated to be approximately 30 m (or 0.27 ha in area). As the average lot size is approximately 0.4 ha in area, minimal supply interference is expected between lots.

On-Site wells be placed a minimum of 30 m apart. Since the radius of influence of each well is expected to be 30 m, if wells are placed 30 m apart minor superposition of drawdown may occur where the radii intersect. The maximum superposition of drawdown is expected to occur at the midpoint between wells (15 m). However, interference between supply wells spaced 30 m apart will be negligible.

Safe yield calculations demonstrate that the Site can adequately support the peak day pumping rate of 27 m^3/day, as well as a peak dry summer day scenario of 43.2 m^3/day.

Potential long-term impacts to the closest groundwater users are expected to be minimal as nitrate loading at the Site boundary is low, the radius of influence of individual supply wells is not expected to extend beyond the Site, and total water takings are small compared to total input of horizontal groundwater flux and recharge at the Site. Negligible impacts are anticipated as a result in an increase in

TOWN OF CALEDON
PLANNING
RECEIVED

Jul 12, 2021

chloride at the Site. The proposed subdivision roads will classify as Class 5 and, as such, road salt will not be applied. Groundwater at the Site is expected to see a small increase in chloride concentration from residential water softeners; however, the resultant chloride concentrations in groundwater were calculated to be much less than the applicable drinking water criteria or criteria for the protection of aquatic life.

Potential long-term impacts to natural features are also expected to be minimal as on-site features do not rely on groundwater contributions. For off-Site features that do rely on groundwater contributions, impacts are also expected to be minimal as total nitrate loadings at the property boundary are expected to be lower than the CCME and CVC guideline for NO_3-as-N of 3 mg/L, infiltration is expected to be maintained or enhanced post-development, and total groundwater taking on-site are small. Therefore, feature based water balance analysis for on-site and off-Site wetland features is not recommended.

Based on the results of the various groundwater investigations completed at the Site and the review of groundwater receptors and potential impacts from development of the Site from changes to groundwater quality and quantity, there does not appear to be a significant potential for impacts to groundwater users or natural features from the proposed development of the Site. This assessment assumes that mitigation measures, such as maintaining infiltration and implementation of tertiary (Level IV) septic systems will be implemented across the proposed development. Cumulative impacts are not anticipated with either the James Dick sand and gravel pit expansion license application or the proposed Erin Sewage Treatment plant.

TOWN OF CALEDON
PLANNING
RECEIVED

Jul 12, 2021

1 Introduction

Cole Engineering Group Ltd. (COLE) was retained by The Manors of Belfountain Corp. ("The Manors") in 2017 to undertake a hydrogeological study in support of a proposed residential development located near the intersection of Bush Street and Mississauga Road in Caledon, Ontario. The legal description of the proposed development is Part of East Half and West Half Lot 9, Concession 5, W.H.S. (Hamlet of Belfountain), Town of Caledon, Regional Municipality of Peel (the "Site"). The location of the Site is shown on **Figure 1.**

The results of COLE's 2017 investigation were provided in a COLE Hydrogeological Investigation Report, dated February 13, 2018. The report was provided to the Town of Caledon (Caledon), the Region of Peel (Peel), the Credit Valley Conservation (CVC), the Niagara Escarpment Commission (NEC), and the Belfountain Community Organization (BCO) for review and comment. In addition, the Town of Caledon retained Terra-Dynamics Consulting Inc. (Terra-Dynamics) to complete an independent third-party review of the 2018 report.

The present report provides an update to COLE's 2018 report that incorporates the results of additional field work and analysis that was completed to address the various review comments.

1.1 Project Description

The Site is approximately 70.28 hectares (ha) in area and is currently used for agricultural purposes. It is approximately bounded by Bush Street to the north, Shaws Creek Road to the west, Mississauga Road to the east, and vacant lands to the south. Belfountain Public School and several existing residential properties are located northwest of the Site. The Site is located within the jurisdiction of the Credit Valley Conservation (CVC). Based on the Draft Plan of Subdivision 21T-91015C dated April 24, 2020, prepared by Nicole Yang of MDTR GROUP, the proposed development will include 75 rural estate lots with an average lot size of 0.4 ha. Additional areas of the Site are proposed for open space (21.53 ha), a park (2.38 ha), and two stormwater dry ponds and a stormwater channel (5.98 ha combined).

Water supply will be provided by private wells and wastewater servicing will be provided by individual septic systems with tertiary (Level IV) treatment. The stormwater management plan for the Site will rely on retention and infiltration to closely match existing conditions. Site servicing is described in detail in the functional servicing report (FSR) prepared by COLE and submitted under separate cover.

The April 24, 2020 Draft Plan of Subdivision is included as **Appendix A**.

1.2 Objectives

The objectives of this hydrogeological investigation are:

- Characterize the existing geological and hydrogeological setting;
- Identify environmentally sensitive features and groundwater receptors on or near the Site;
- Estimate the water balance parameters for the Site, particularly groundwater recharge;
- Estimate the potential water supply demand for the development and assess the results of pumping tests completed at on-site test wells;
- Review groundwater quality results for the Site and compare to Ontario Drinking Water Quality Standards (ODWQS);
- Estimate the potential nitrate loading to the groundwater system from the private septic systems;

TOWN OF CALEDON
PLANNING
RECEIVED

Jul 12, 2021

- Assess the potential impacts to the natural environment and other groundwater users as a result of the development, including the planned private wells and septic systems; and
- Provide recommendations on management and mitigation measures.

1.3 Applicable Regulations and Agencies

Environmental regulations and policies that may be relevant for this hydrogeological investigation are briefly discussed below.

Provincial Policy Statement (2020)

The Provincial Policy Statement provides direction to regional and local municipalities regarding planning policies for the protection and management of water resources. According to the Provincial Policy Statement, restrictions to development and alterations should be implemented to protect all municipal drinking water supplies and designated vulnerable areas. Development and alterations are to be restricted in or near sensitive surface water features and sensitive groundwater features such that their hydrologic function will be protected, restored, or improved.

Niagara Escarpment Plan (December 21, 2018 Consolidation)

The Niagara Escarpment Plan (NEP), last amended in 2018, seeks to protect the geologic feature of the Niagara Escarpment and lands within the vicinity by allowing only developments compatible with the natural environment. The objectives of the NEP are:

- To protect unique ecologic and historic areas;
- To maintain and enhance the quality and character of natural streams and water supplies;
- To provide adequate opportunities for outdoor recreation;
- To maintain and enhance the open landscape character of the Niagara Escarpment in so far as possible, by such means as compatible farming or forestry and by preserving the natural scenery;
- To ensure that all new development is compatible with the purpose of the Plan;
- To provide for adequate public access to the Niagara Escarpment; and
- To support municipalities within the Niagara Escarpment Plan Area in their exercise of the planning functions conferred upon them by the Planning Act.

Based on the NEP, the Site is located within the Minor Urban centre of Belfountain and is designated “Escarpment Rural Area”, “Escarpment Protection Area” and “Escarpment Natural Area”.

Region of Peel Official Plan (2018)

The Region of Peel Official Plan (“ROP”) is a public document that outlines the long-term policy framework for decision making related to protection of the environment, management of resources, directing growth and sets the basis for providing Regional services.

The Site is within the Region’s “Rural System” and the northeastern portion is within the Core Areas of the Greenlands System. The subject lands are located outside of the identified vulnerable aquifer areas in Peel, as shown on Schedule D2.

TOWN OF CALEDON
PLANNING
RECEIVED

Jul 12, 2021

The ROP identifies that proper protection, management and conservation of Peel's water resources and related natural systems are vital to sustaining the social, economic and environmental well-being of the Region. The ROP also recognizes the significance of maintaining and protecting woodlands, topographic depressions, and wetlands to sustaining groundwater quality and quantity (Section 2.2.5).

The ROP recognizes groundwater aquifers as an important source of drinking water for Caledon for both private and municipal water supplies (Section 3.4). The ROP identifies that in North Peel, groundwater recharge occurs through the bedrock dolostone of the Niagara Escarpment and surface drainage typical of morainal topography north of the Peel Plain and the Escarpment.

Town of Caledon Official Plan (2018)

The Town of Caledon Official Plan is a document that outlines the principles, goals, objectives, and policies intended to guide future land use, physical development, effects on the social, economic, and natural environment within the Town of Caledon. It was initially adopted in 1979 but has been consolidated in April 2018. According to the Town of Caledon Official Plan, the Site is situated within the settlement area (Hamlet) of Belfountain.

The OP establishes that new development shall not negatively impact the quality and quantity of groundwater aquifers (Section 3.2.5.13). Specifically, new development must ensure that quality and quantity of groundwater recharge and discharge and the flow distribution of groundwater, including groundwater-surface water interconnections and contributions to stream base flow, are protected, maintained and, where appropriate, enhanced and restored. Appropriate consideration shall be given to the cumulative effects of development and water taking on the water budget of the impacted area. Establishment of appropriate ecosystem linkages utilizing groundwater recharge and discharge zones is strongly encouraged.

Permit to Take Water – Section 34 of the Ontario Water Resources Act (1990)

Based on recent regulatory changes, a Permit to Take Water (PTTW) is required under Section 34 of the Ontario Water Resources Act (OWRA) for water takings greater than 50,000 L/day, and for construction water takings greater than 400,000 L/day. Construction water takings between 50,000 L/day and 400,000 L/day require registration on the Environmental Activity and Sector Registry (EASR). Water taking permit applications are not anticipated for either construction dewatering or for water supply purposes.

Credit Valley Conservation Authority (O.Reg. 160/06)

Under Section 28 of the Conservation Authorities Act, the local Conservation Authorities are mandated to protect the health and integrity of the regional greenspace system and to maintain or improve the hydrological and ecological functions performed by valley and stream corridors. CVC, through its regulatory mandate, is responsible for issuing permits under O.Reg. 160/06, Development, Interference with Wetlands and Alterations to Shorelines and Watercourses for development applications or Site alteration works within regulated areas.

The Clean Water Act, 2006 – Ontario Ministry of the Environment, Conservation and Parks

The Ministry of the Environment, Conservation and Parks (MECP) mandates the protection of existing and future sources of drinking water under the Clean Water Act, 2006 (CWA). Initiatives under the CWA include the delineation of Wellhead Protection Areas (WHPAs), significant groundwater recharge areas (SGRAs) and Highly Vulnerable Aquifers (HVAs) as well as the assessment of drinking water quality and quantity threats within Source Protection Regions. Source Protection Plans are developed under the CWA

TOWN OF CALEDON
PLANNING
RECEIVED
Jul 12, 2021

and include the restriction and prohibition of certain types of activities and land uses within WHPAs. Based on MECP Source Water Protection mapping, the Site appears to border a WHPA-E of Peel Region's Inglewood Well 2.

2 Regional Geological and Hydrogeological Understanding

A conceptual understanding of the geological and hydrogeological system was developed through review of existing reports and available geological information. This included:

- Chapman, L.J. and Putnam, D.F. (1984) The Physiography of Southern Ontario, 3rd Edition. Ontario Geologic Survey, Special Volume 2, 270 p.;
- Cowan, W.R. (1976) Quaternary Geology of the Orangeville Area Southern Ontario. Ontario Division of Mines, Report 141, 98 p.;
- Credit Valley Conservation (2011) Erin Servicing and Settlement Master Plan, 2011: Environmental Component – Existing Conditions Report
- Credit Valley Conservation (1998) West Credit Subwatershed Study: Characterization Report.
- Davies, S. and Holysh, S. (2007) Groundwater Resources Study of the Credit River Watershed. Ontario Geological Survey; and,
- AquaResources Inc. (2009) Integrated Water Budget Report – Tier 2: Credit Valley Source Protection Area. Credit Valley Conservation Authority.

2.1 Topography and Drainage

The Site lies within the West Credit River Subwatershed under the jurisdiction of the CVC. The West Credit River drains into the main branch of the Credit River east of Belfountain, below the Niagara Escarpment at the Forks of the Credit. The West Credit Subwatershed is an important groundwater recharge area due to the local presence of coarse-grained soils and hummocky topography. Significant groundwater discharge occurs along the West Credit River and, as a result, it is mapped as coldwater fish habitat. The West Credit Subwatershed includes the Town of Erin, the Town of Caledon, and the community of Belfountain.

Topography of the West Credit River Subwatershed varies from between approximately 375 m above sea level (masl) to approximately 475 masl. Topography within this area reflects glacial processes that deposited landforms such as streamlined hills (drumlins), topographic ridges (moraines), and high-relief hummocky topography with closed depressions. As noted above, recharge within the subwatershed is relatively high, due to extensive highly permeable sediments, and is amplified in areas with hummocky topography compared to areas covered by relatively flat till plains.

Regional topography is shown on **Figure 2**.

2.2 Physiography

Several physiographic regions have been mapped (Chapman and Putnam, 1984) within the West Credit River Subwatershed as follows:

- Niagara Escarpment;
- Horseshoe Moraine;
- Guelph Drumlin Field; and,

TOWN OF CALEDON
PLANNING
RECEIVED

Jul 12, 2021

- Hillsburgh Sandhills (Orangeville Moraine).

The majority of the subwatershed is comprised of the Guelph Drumlin Field and the Horseshoe Moraines regions.

A summary of each physiographic region is provided below.

Niagara Escarpment: The Niagara Escarpment is a major topographic change in the bedrock of Southern Ontario that results from differential weathering of the underlying dolostone and shale. Bedrock only outcrops within the West Credit River Subwatershed at the Niagara Escarpment and within river valleys. The vast majority of the subwatershed is above the Escarpment where ground surface elevations are higher.

Horseshoe Moraine: The Horseshoe moraine includes the Paris, Galt, and Singhampton moraines and is described as a kame moraine deposited by ice-contact processes.

Within the subwatershed, the Paris Moraine is the dominant moraine feature and occurs in the southern portion of the study area. The Horseshoe moraine is considered a hummocky deposit primarily composed of sand to sandy silt till that is commonly referred to as the Wentworth Till. The sandy silt till results in lower infiltration rates that may be increased by the hummocky topography and closed depressions of the moraine. Sandy interbeds may be found within the Horseshoe moraine and where present may also increase permeability.

Guelph Drumlin Field: The drumlins of the Guelph Drumlin Field are typically composed of sandy silt till commonly referred to as the Port Stanley Till. The sandy silt till results in lower infiltration rates and do not likely contain sand and gravel interbeds. Between the streamlined drumlin hills are relatively flat meltwater channels composed of glaciofluvial sand and gravel that may extend to bedrock. Significant outwash deposits associated with the Caledon Meltwater channel occur in the subwatershed from the Niagara Escarpment west towards Erin.

Hillsburgh Sandhills (Orangeville Moraine): The Hillsburgh Sandhills / Orangeville Moraine are primarily ice contact sand and gravel. In addition to the sandy nature of this deposit, the high-relief and hummocky topography promotes increased recharge in the area. As a result, the Hillsburgh Sandhills are an important recharge area within the West Credit River Subwatershed.

Bedrock topography of the area is gently sloping towards the south / southwest and is relatively flat with local relief commonly ranging from 2 m to 6 m. An exception to the relatively flat bedrock topography is the existence of buried bedrock valleys and the steep change in elevation at the Niagara Escarpment. Specifically, within the West Credit River Subwatershed, there is a buried valley that follows the current West Credit River from Erin to Belfountain. In this location overburden materials are thicker and top of bedrock elevations are lower. In general, the bedrock surface represents a regional unconformity affected by erosion from glacial and fluvial processes.

A map of the regional physiography is shown on **Figure 3**.

2.3 Regional Geology and Hydrogeology

A conceptual understanding of the geological and hydrogeological system was developed through review of existing reports and available geological information primarily from work conducted by the Ontario Geological Survey (OGS) and reports completed for the CVC. From these resources, the West Credit River Subwatershed stratigraphy was interpreted to consist of the following units (youngest to oldest):

TOWN OF CALEDON
PLANNING
RECEIVED

Jul 12, 2021

- Recent deposits (Overburden);
- Wentworth Till (Overburden);
- Glaciofluvial deposits / Orangeville Moraine (Overburden);
- Port Stanley Till (Overburden);
- Guelph Formation Dolostone (Bedrock);
- Amabel Formation Dolostone (also referred to as the Gasport Formation; Bedrock);
- Fossil Hill Formation Dolostone (Bedrock);
- Cabot Head Formation Shale (Bedrock);
- Manitoulin Formation Dolostone (Bedrock);
- Whirlpool Formation Sandstone (Bedrock); and,
- Queenston Formation Shale (Bedrock).

The following section provides a detailed summary of each overburden and bedrock unit.

Overburden Units

Recent Deposits: The most recent deposits consist of a mixture of gravel, sand, silt, and clay that commonly occurs along streams. Recent deposits in the area also consist of organic deposits in areas with poor drainage.

Wentworth Till: The Wentworth Till is described predominantly as a sandy silt to silty sand till and displays variable thickness, with its thickest portion found within the Paris Moraine of the Horseshoe Moraine physiographic element. The sandy silt till results typically results in modest infiltration rates; however, recharge rates are enhanced, due to the hummocky topography and closed depressions common in the Horseshoe Moraine physiographic region.

Glaciofluvial/Orangeville Moraine: The glaciofluvial / Orangeville Moraine sediments are dominated by sand and gravel. Specifically, the Orangeville Moraine is considered an ice contact kame moraine dominated by sand and gravel sediments. The coarse sediments result in higher infiltration but may be locally absent between local till units.

Port Stanley Till: The Port Stanley till is a stoney sandy silt till with low plasticity that is commonly considered the basal till unit existing that may exist across portions of the Site above bedrock. Recent work by the OGS (e.g. Burt 2017) suggest that the Port Stanley is more prevalent north of the site. This till is texturally similar to the Wentworth Till although it may have a greater total carbonate content. Similar to the Wentworth Till, the sandy silt till of the Port Stanley Till results in lower infiltration rates than the outwash deposits and may act as a confining unit. However, the abundance of domestic water wells north of the Site (including some high capacity wells) in areas with mapped Port Stanley Till demonstrates that water can infiltrate through this unit.

Overburden geology is shown on **Figure 4**.

Bedrock Units

Guelph Formation: The Guelph Formation is a light brown crystalline dolostone similar to the Amabel Formation. This formation acts as an aquifer but is only found in the western parts of the Credit River Watershed and where found it is commonly thin and difficult to distinguish from the Amabel Formation. The Guelph Formation has been mapped in the West Credit Subwatershed, west of the Site.

Amabel Formation (a.k.a. Gasport Formation): The Amabel Formation is a light grey, crystalline dolostone with thick beds and abundant fossils and reefal structures. The Amabel Formation is regionally extensive and is considered a significant aquifer due to its high primary and secondary porosity, common fractures,

TOWN OF CALEDON
PLANNING
RECEIVED
Jul 12, 2021

and possible karstic features. Above the Niagara Escarpment the Amabel Formation is the primary surficial bedrock unit and is considered the cap rock of the escarpment. The Amabel Formation is the uppermost bedrock unit mapped at the Site.

Fossil Hill Formation: The Fossil Hill Formation of the Clinton group is a fossiliferous dolostone. This unit is commonly thin within the Credit River Watershed, with maximum thickness of approximately 3 m.

Cabot Head Formation: The Cabot Head Formation is described as a greenish grey and red silty shale that is considered a regional aquitard. This formation contains thin sandstone and limestone interbeds and abundant fossils (fossiliferous).

Manitoulin Formation: The Manitoulin Formation is a thin to medium bedded dolostone with abundant fossils and shale beds.

Whirlpool Formation: The Whirlpool Formation is a grey to reddish grey / brown fine grained quartzose sandstone.

Queenston Formation: The Queenston Formation consists of thin to thick beds of red shale and may contain interbeds of grey-green shale, limestone, or siltstone. Although the Queenston Formation is commonly considered an aquitard, when weathered its aquitard characteristics are diminished.

Bedrock geology is shown on **Figure 5** and depth to bedrock is illustrated on **Figure 6**.

2.3.1 Groundwater Takings

In the upper Credit River Watershed, most municipal water supplies are sourced from groundwater and several municipal wells take significant amounts of water from the Guelph-Amabel regional bedrock aquifer, which also is the main aquifer underlying the Site.

The following tables summarize the details of the municipal supply wells in the upper Credit River Watershed, including the well depth below ground surface, permitted rate of water taking and average rate of water taking in 2016 as reported by the municipalities. The municipal groundwater takings indicate that the Guelph-Amabel bedrock aquifer is generally capable of supporting large groundwater takings for drinking water systems.

The closest municipal takings to this Site are the Erin municipal wells, which are approximately 4.3 Km away from the Site. The cumulative total of the Erin municipal takings was 768,031 L/day, on average, in 2016. **Table 2.1** to **Table 2.6** demonstrates that the Guelph-Amabel formations are regionally very transmissive aquifers.

It should be noted that in an Expert Panel Report on Water Well Sustainability in Ontario (Novakowski *et a*l., 2006), the Amabel and Guelph Formations are described as the most extensive and productive bedrock aquifers in Ontario.

Table 2.1 Orangeville Groundwater Takings (Town of Orangeville, 2016)

Supply Well	Screened Layer	Depth (mbgs)	Permitted Water Taking Rate (L/day)	2016 Average Water Taking Rate (L/day)
2A	Guelph-Amabel	38.7	1,309,000	435,156
5/5A	Overburden	17.7	5,282,000	2,259,976
6	Guelph-Amabel	48.8	3,600,000	2,183,077

TOWN OF CALEDON
PLANNING
RECEIVED

Jul 12, 2021

Table 2.1 Orangeville Groundwater Takings (Town of Orangeville, 2016)

Supply Well	Screened Layer	Depth (mbgs)	Permitted Water Taking Rate (L/day)	2016 Average Water Taking Rate (L/day)
7	Guelph-Amabel	47.2	1,310,000	950,991
8C, 8C	Guelph-Amabel	79.2 76.2	654,000	311,145
9A/9B	Guelph-Amabel	17.4 17.4	878,000	679,890
10	Overburden	60.9	1,245,000	957,830
11	Guelph-Amabel	54.8	1,309,000	837,862
12	Guelph-Amabel	49.4	1,309,000	25,677

Table 2.2 Mono Groundwater Takings (Town of Orangeville, 2017)

Supply Well	Screened Layer	Depth (mbgs)	Permitted Water Taking Rate (L/day)	2016 Average Water Taking Rate (L/day)
MW-1	Guelph-Amabel	60	820,000	20,252
MW-3	Guelph-Amabel	55	1,571,000	322,158
MW-4	Guelph-Amabel	36	751,000	21,238
Island Lake TW1	Overburden	57.3	3,932,640	300,986
Island Lake PW1	Overburden	58.8		
Island PW2-06	Overburden	50.3		
PW1	Guelph-Amabel	25.1	655,200	150,214
PW2	Guelph-Amabel	25.1		

Table 2.3 Erin Groundwater Takings (Town of Erin, 2017)

Supply Well	Screened Layer	Depth (mbgs)	Permitted Water Taking Rate (L/day)	2016 Average Water Taking Rate (L/day)
E7	Guelph-Amabel	42	2,159,998	335,342
E8	Guelph-Amabel	46	1,967,998	432,689

Table 2.4 Hillsburgh Groundwater Takings (Town of Erin, 2017)

Supply Well	Screened Layer	Depth (mbgs)	Permitted Water Taking Rate (L/day)	2016 Average Water Taking Rate (L/day)
H2	Guelph-Amabel	88	454,000	76,149
H3	Guelph-Amabel	58	682,000	

TOWN OF CALEDON
PLANNING
RECEIVED
Jul 12, 2021

Table 2.5 Caledon Village Groundwater Takings (Regional Municipality of Peel, 2015)

Supply Well	Screened Layer	Depth (mbgs)	Permitted Water Taking Rate (L/day)	2016 Average Water Taking Rate (L/day)
Caledon Village 3	Overburden	36.1	1,964,000	-
Caledon Village 3B	Overburden	34.7	1,309,000	-
Caledon Village 4	Overburden	75.9	3,273,000	-

Table 2.6 Alton Groundwater Takings (Regional Municipality of Peel, 2015)

Supply Well	Screened Layer	Depth (mbgs)	Permitted Water Taking Rate (L/day)	2016 Average Water Taking Rate (L/day)
Alton 3	Guelph-Amabel	22	1,047,398	-
Alton 4	Guelph-Amabel	25	1,047,398	-

2.4 Source Protection Plan Considerations

As per the Clean Water Act, delineation of Wellhead Protection Areas (WHPA), Significant Groundwater Recharge Areas (SGRA) and Highly Vulnerable Aquifers (HVA) must be completed for the protection of existing and future drinking water sources.

Based on the Credit Valley Source Protection Area Assessment Report, the Site is located within a SGRA and partially within a HVA. The Site also borders a WHPA-E of Peel Region's Inglewood Well 2. The WHPA-E is an area associated with wells that may be Groundwater Under Direct Influence (GUDI) of surface water.

The portion of the Site that borders the WHPA-E and is within the HVA is an open space feature that will continue to be open space post-development, located over 200 m from the limits of development. Therefore, no influence or impact within the WHPA-E or HVA from development of the Site is anticipated. As discussed later in this report, groundwater recharge will be maintained post-development, which fulfills the requirement for development within a SGRA.

3 Natural Heritage

3.1 Water Courses

The West Credit River is managed as a cold-water fish habitat. In the main and middle tributaries, it is home to cold-water fish such as brook trout and brown trout. The lower portion of the West Credit River supports a migratory coldwater fishery, including Chinook salmon, rainbow trout and brown trout (CVC, 2009). The cold-water habitat is supported by groundwater discharge, which supports baseflow. Baseflow within the West Credit River has been estimated to be approximately 330 L/s (Davies and Holysh, 2007). By comparison, an assumed groundwater taking of approximately 1.95 L/s is expected at the Site (168,750 L/day) (~ 0.6% of the total baseflow of the West Credit River).

There in a small headwater drainage feature labelled RA1 north of the Site in a topographically lower area that has flows into the Upper West Credit River. This feature is interpreted to be supported by groundwater discharge. The MNRF has indicated that the West Credit Brook Trout community uses some portion of RA1 (Savanta, 2018).

TOWN OF CALEDON
PLANNING
RECEIVED
Jul 12, 2021

There is an ephemeral drainage feature that flows onto the Site from the property to the south, which has been labelled as RB1 by Savanta (2018). The source of the flow is considered to be seasonal run-off from external catchment south of the Site. The drainage feature was observed to be dry during COLE site visits in fall 2017, and it appears that any flow in this feature infiltrates into the overburden in a depression on-site and provides recharge to the groundwater system.

There are no other watercourses that traverse the Site.

3.2 Wetlands

The on-site wetlands (SWT3-2 and MAS3-1), located in the northern area of the Site, are a diverse habitat consisting of at least two organic soil vegetation types; Cattail Marsh (MAS3-1) and Willow Thicket Swamp (SWT3-2) (Savanta 2018). The Cattail Marsh is classified as a shallow marsh with the tall herb layer formed of broad-leaved cattail, blue-joint grass and reed-canary grass, while the medium layer is dominated by beaked sedge. The marsh has been confirmed as a breeding habitat for the endangered Jefferson Salamander, and is dominated by Broad-leaved Cattail (*Typha latifolia*), Reed-canary Grass (*Phalaris arundinacea*) and Blue-joint Grass (*Calamagrostis canadensis; Savanta 2018*). The Willow Thicket Swamp occurs in shallow water on an almost floating organic mat. The willow is accompanied by red-osier dogwood and bitter nightshade. Beneath the canopy of shrubs grow tall grasses – blue joint and reed canary. The swamp is dominated by the locally rare (CVC) plant species Autumn Willow *(Salix serissima)* and is accompanied by Red-Osier Dogwood (*Cornus sericea*) and Bitter Nightshade (*Solanum dulcamara; Savanta 2018*).

The off-Site wetlands (SWM1-1 and MAM3-1), located just north of the Site, consist of a White Cedar-Hardwood Mineral Mixed Treed Swamp (SWM1-1) and a Blue-Joint Organic Meadow Marsh (MAM3-1).

The wetland locations identified above can be seen on **Figure 7**.

4 Site Investigations

4.1 Previous Investigations

The following are summaries of previous hydrogeological investigations at the Site conducted by other consultants.

4.1.1 Terraprobe

Terraprobe conducted a hydrogeological investigation at the Site between 1988 and 1989. There were 30 boreholes completed with standpipes drilled to approximately three (3) mbgs and an additional nine (9) boreholes completed with standpipes ranging between 3.6 mbgs to 18.7 mbgs in 1989. A layer of fine sand to silt material was noted at depths of up to approximately 1.4 mbgs at locations 88-2, 88-4, 88-6, 88-7, 88-13, 88-14, 88-17 and 88-18. Outwash materials were encountered at depths of approximately 2.1 mbgs at the northeast portion of the Site in the vicinity of OW-1 and approximately 15 mbgs in the vicinity of OW-2 south of the Site. Glacial till extended from close to ground surface to the base of boreholes at 88-13, 88-21 to 88-30 and OW-2.

Aquifer performance tests were conducted during the hydrogeological investigation. In 1988, a step-drawdown test was conducted at PW-1 at rates of 1 gpm (0.08 L/s), 2.5 gpm (0.18 L/s) and 4 gpm (0.30 L/s). At PW-2, the pumping rates were set to 10 gpm (0.76 L/s), 20 gpm (1.52 L/s), 30 gpm (2.27 L/s) and 35 gpm (2.65 L/s). In 1989, a 24-hour pumping test was conducted at PW-3 at a rate of 25 gpm

TOWN OF CALEDON
PLANNING
RECEIVED
Jul 12, 2021

(1.89 L/s). Two pumping tests were performed at PW-4 at a rate of 1 gpm (0.08 L/s). Based on Terraprobe's report, the test results demonstrated that there is sufficient water supply for the proposed development at the Site.

Terraprobe conducted a private residential well survey at 63 residences in the Belfountain area in 1988 and contact was made with 13 residents. An additional private well survey was conducted by Terraprobe in 1989 at 81 residences and 31 responses were received. A third survey was conducted at select residences in 1990 in the Caledon Mountain Estates. Based on the findings from the private well surveys, Terraprobe identified that water supply from shallow dug wells had generally poor quality and quantity in contrast to drilled wells.

Based on the completed investigation, Terraprobe concluded that the proposed development of 73 lots (at that time) could be supported by groundwater supply and that conventional septic systems would be appropriate for the development. Terraprobe concluded that the development could proceed with minimal potential for impact to natural features or groundwater users.

4.1.2 W.B. Beatty & Associates

In June 2002, W.B. Beatty & Associates Limited (W.B. Beatty) conducted an assessment of water supply and wastewater servicing at the Site through a review of previously completed reports, including hydrogeological studies by Terraprobe from 1988 to 1992. W.B. Beatty commented that the sand and gravel aquifer and dolostone aquifer along the southwestern boundary of the Site would be the most promising areas for water quantity and that water supply wells located within this area would also minimize potential interference with nearby wetlands and ponds. It was suggested that average day water supply demand could be met by a single well in the dolostone aquifer.

4.1.3 R.J. Burnside

Between June 2014 and June 2017, R.J. Burnside monitored groundwater elevations in 29 wells which included four (4) piezometers on-site and three (3) nearby residential wells. Groundwater samples were collected from monitoring wells TW1 to TW12 for water quality analysis and comparison to ODWS between December 2014 and May 2017. These water samples were collected at the end of the pumping period, per the Burnside memo titled "Belfountain Water Supply Assessment", dated March 30, 2015.

R.J. Burnside completed five (5) infiltration tests at five (5) separate locations using a Turf-Tec Infiltrometer. The analyses from these infiltration tests are provided in **Section 5.4**.

Six (6) pumping tests were conducted between June 2014 and August 2014 and two (2) additional pumping tests were conducted between March 2016 and April 2016. The results are presented in **Section 5.4.** R.J. Burnside provided the data, analyses and drawings from their investigation to Manors of Belfountain for use by COLE.

4.1.4 Geotechnical Investigations

In June 2014, *exp* conducted a geotechnical investigation that involved drilling four (4) boreholes at the Site to depths ranging from 4.9 mbgs to 12 mbgs. From Boreholes 1 to 3, sand and gravel to sand and silt were found beneath a thin layer of ploughed material. A very dense sandy silt layer was encountered approximately 7 mbgs at Borehole 3 towards the southeast of the Site. It was suspected that the dolostone bedrock was found at approximately 3.2 mbgs at Borehole 4 located near the north boundary of the Site.

An additional seven (7) boreholes were drilled at the Site in August 2017 ranging from 4.6 mbgs to 8.2 mbgs. A topsoil layer approximately 20 cm to 50 cm in thickness was encountered during drilling at all

TOWN OF CALEDON
PLANNING
RECEIVED

Jul 12, 2021

boreholes. Below the layer of topsoil was a layer of reworked materials consisting of dark brown to brown silty sand mixed with trace clay to clayey, trace to some gravel, trace rootlets, and occasional boulder fragments at all boreholes from approximately 0.6 mbgs to 1.4 mbgs. Sand and gravel were encountered until termination at 8.2 mbgs.

Winter Associates completed a Stormwater Management Study for the Site in November 1989 (Winter, 1989). The study noted that groundwater recharge at the Site is enhanced by the permeable soils and the closed depressions / detention storage basins that exist throughout the Site.

4.2 COLE Investigations

Starting in October 2017, COLE conducted a hydrogeological investigation consisting of the following:

- Groundwater level measurements;
- Groundwater sampling;
- Infiltration testing;
- Review of existing geologic and hydrogeological information;
- Water balance analysis;
- Chloride loading assessment;
- Nitrate loading assessment; and
- Assessment of water taking rates and analysis of pumping test results.

Findings from the investigation are discussed further below. Boreholes, wells, and other monitoring locations shown on **Figure 7**. Monitoring wells used in the current hydrogeological investigation are outlined in **Table 4.1**. Borehole logs for monitoring wells are included as **Appendix B**.

TOWN OF CALEDON
PLANNING
RECEIVED

Jul 12, 2021

Table 4.1 Monitoring Well Details

Well ID	Easting	Northing	Ground Elevation (masl)	Consultant	Well Stick up (m)	Well Elevation Top of Pipe (masl)	Screen Material	Depth to Bottom (mbtop)	Depth to Bottom (masl)	Depth to Bedrock (mbtop)
TW1	579485	4848275	412.7	R.J. Burnside	1.1	413.8	limestone and shale	55	54	29
TW1-09	579078	4848671	403.0	Beatty	0.69	403.7	limestone	35	34	22
TW2	579799	4848770	402.1	R.J. Burnside	0.60	402.7	limestone and shale	21	20	12
TW3	579615	4848765	402.3		0.55	402.9	limestone and shale	37	36	19
TW4	579633	4849059	404.5		0.60	405.1	limestone and shale	26	36	17
TW5	579982	4849204	405.1		0.54	405.7	limestone and shale	33	32	13
TW6	580018	4849204	405.9		0.52	406.4	limestone and shale	32	31	13
TW7	580089	4849093	405.0		0.58	405.6	limestone	23	23	7.9
TW8	579760	4849152	405.9		0.66	406.5	limestone and shale	35	35	19
TW9	579973	4848950	404.7		0.59	405.3	limestone and shale	36	35	9.8
TW10	579766	4848879	402.6		0.80	403.4	limestone	31	30	15
TW11	579655	4849078	406.1		0.70	406.8	limestone	32	37	15
TW12	579433	4848647	402.1		0.73	402.9	limestone and shale	37	37	23
MW1-14D	579813	4848758	400.6	R.J. Burnside	0.70	401.3	clay and stones	12	12	N/A
MW1-14S	579812.90	4848758.30	400.6		0.70	401.3	clay and stones	8.2	7.5	N/A

TOWN OF CALEDON
PLANNING
RECEIVED

Jul 12, 2021

Table 4.1 Monitoring Well Details

Well ID	Easting	Northing	Ground Elevation (masl)	Consultant	Well Stick up (m)	Well Elevation Top of Pipe (masl)	Screen Material	Depth to Bottom (mbtop)	Depth to Bottom (masl)	Depth to Bedrock (mbtop)
OW1	579792.70	4849322.10	390.0	Terraprobe	0.77	390.8	dolostone	5.9	5.1	2.1
PW3	579257.58	4848934.12	401.3		0.44	401.8	dolostone and shale	35	35	24
PW4	579547.70	4849264.70	383.9		1.2	385.1	shale	27	26	-
PZ2-14	579557.10	4849228.50	389.5	Burnside	0.87	390.3	-	1.7	0.80	-

TOWN OF CALEDON
PLANNING
RECEIVED
Jul 12, 2021

5 Local Geological and Hydrogeological Conditions

5.1 Topography and Physiography

Topography at the Site is predominantly hummocky with closed depressions allowing for increased groundwater recharge. The Site is considered to be primarily within the Horseshoe Moraine physiographic region due to the sand content and hummocky nature of the topography. Specifically, the Site is in close proximity to Paris Moraine sediments but overlies meltwater channel glaciofluvial sediments. In the north / northeast portion of the Site there is a steep slope towards the West Credit River that likely represents the proximity of the Niagara Escarpment physiographic region.

5.2 Geology

In order to characterize the hydrogeological setting on-site, COLE developed two geologic cross-sections. The cross-sections were developed based on-site logs for boreholes completed during previous hydrogeological studies. **Figure 8** presents a plan view of the Site and location of the cross-sections. **Figure 9** and **Figure 10** present a cross-section geological understanding of the Site. **Table 5.1** provides a summary of the Geological Units at the Site.

Table 5.1 Summary of Geologic Units at the Site

Formation	Geology	Material
Recent Deposits	Overburden	Mix of gravel, sand, silt and clay along streams and organic deposits in wetlands
Wentworth Till (aquitard)	Overburden	Sandy silt to silty sand till
Glaciofluvial / Orangeville Moraine (aquifer)	Overburden	Sand and gravel sediments
Port Stanley Till (semi-confined aquitard)	Overburden	Stoney sandy silt till
Amabel Formation (aquifer)	Bedrock	Light grey, crystalline, fossiliferous dolostone
Cabot Head Formation (aquitard)	Bedrock	Greenish grey and red silty shale
Manitoulin / Whirlpool Formation (confined aquifer)	Bedrock	Medium bedded dolostone with shaley interbeds; grey to reddish quartzose sandstone
Queenston Formation (aquitard)	Bedrock	Red shale

5.2.1 Overburden Geology

Recent deposits at the Site are primarily located within the wetlands to the north of the Site (SWT3-1 and MAS3-1). Based on borehole logs, the overburden materials within the Site are dominated by sand and gravel deposits interpreted to be glaciofluvial deposits. As a result of the prevalence of sand and gravel encountered at surface, it is interpreted that the Wentworth Till is limited in extent across the Site. The glaciofluvial sand and gravel deposits are sometimes found underlying the Wentworth Till, where the till is present.

Based on the regional stratigraphy, Port Stanley Till may occur as the basal till above bedrock at the Site. Based on Site data, the Port Stanley Till is possibly present in only a limited number of boreholes across the Site. Of the more than 20 boreholes that intersected bedrock, a basal till was only interpreted at PW1

TOWN OF CALEDON
PLANNING
RECEIVED
Jul 12, 2021

and OW2, TW12 and OW4. Recent work by the OGS (Burt, 2017) suggests that the Port Stanley is more prevalent north of the site. As described, the till is a silty / sandy till and is not as impermeable as other tills below the escarpment (e.g., Halton Till, Newmarket Till). Therefore, infiltration through this layer, where present, will not be negligible. Further, laboratory data from groundwater sampling completed as part of this hydrogeological investigation indicated the presence of nitrates in several bedrock wells. This suggests that the Port Stanley Till, if present at the Site, is not acting as a significant aquitard.

Based on the above, it is COLE's opinion that the Port Stanley Till, if present, is not acting as a significant confining layer underlying the Site and that infiltration will reach the bedrock aquifer.

5.2.2 Bedrock Geology

Based on borehole logs at the Site, bedrock is dominated by limestone and dolostone deposits. Although borehole logs do not differentiate the limestone and dolostone bedrock units, it is likely that they are primarily composed of the Amabel Formation dolostone aquifer and possibly contain a thin unit of the Fossil Hill Formation. Another dolostone aquifer called the Guelph Formation occurs west of the Site and overlies the Amabel Formation in that area.

Based on available OGS mapping, there is the potential for karst in the Belfountain area (Brunton and Dodge, 2008). Karst expressions at the surface may act as points of focused recharge. However, identifying karst within the area is difficult as the significant overburden thickness reduces the ability to identify individual karst features. Focused recharge within thick overburden deposits may be a result of other features within the sediment, such as closed depressions, or a buried tile bed. Due to the relatively thick overburden at the Site, it will be difficult to confirm the presence of any potential karst features.

The limestone and dolostone deposits of the Amabel Formation are underlain by shale interpreted to be the Cabot Head Formation, which acts as a regional aquitard. Borehole logs on-site do not extend deep enough to characterize the lower bedrock units and the presence / absence and thickness of the Manitoulin / Whirlpool and Queenston Formations. However, off-Site boreholes and MECP water well records indicate that the Cabot Head Formation shales are underlain by the Manitoulin / Whirlpool Formation Aquifer, followed by the Queenston Formation shale aquitard.

5.3 Hydraulic Conductivity

Six (6) different 6-hour pumping tests were conducted by R.J. Burnside in select wells (TW1 to TW6) in order to obtain an understanding of the in-situ hydraulic properties of the dolostone unit across the Site. Tests were conducted in late spring or summer month when generally drier conditions would be expected, including on June 11, 2014, July 8, 2014, July 15, 2014, August 26, 2014, and August 28, 2014.

For each test, a known pumping rate was used, and drawdown and recovery were measured manually and/or with a data logger until a minimum of 95% recovery was achieved. Transmissivity estimates were subsequently obtained from the Cooper-Jacob non-equilibrium equation below.

$$T = \frac{0.183Q}{\Delta s}$$

Where,

T transmissivity (m^2/day)
Q pumping rate (m^3/day)
Δs Slope of the time-drawdown graph expressed as a change in drawdown between any two times on the log scale whose ratio is 10 (one log cycle).

Hydraulic conductivity was then calculated using the equation below.

TOWN OF CALEDON
PLANNING
RECEIVED
Jul 12, 2021

$$K = \frac{T}{b}$$

Where,

K hydraulic conductivity (m/day)
B thickness of saturated aquifer (m)

Distance-time curves used to estimate Δs for the above equation are shown in **Appendix C. Table 5.2** summarizes the transmissivity and hydraulic conductivity estimates obtained by R.J. Burnside using the Cooper-Jacob method. Further discussion of the pumping test results is presented in **Section 6**.

Table 5.2 Estimated Transmissivity and Hydraulic Conductivity

Well ID	Pumping Rate (L/min)	Aquifer Thickness (m)	Transmissivity (m^2/day)	Hydraulic Conductivity (m/s)
TW1	45	23.2	9.37	$4.7x10^{-6}$
TW2	11.34	6.04	14.94	$2.86x10^{-5}$
TW3	96.6	16.12	84.85	$6.1x10^{-5}$
TW4	30.6	16.12	403.19	$2.9x10^{-4}$
TW5	75.6	16.88	26.60	$1.83x10^{-5}$
TW6	68.4	17.18	72.10	$4.86x10^{-5}$

5.4 Infiltration Rates

R.J. Burnside completed five (5) infiltration tests using a Turf-Tec Infiltrometer and two (2) infiltration tests were completed using test pits. The test results are summarized in the following table. The locations of infiltration tests are included on **Figure 11**.

Review of the infiltration test results by COLE indicates that the results seem reasonable for the described material. Based on the OGS mapping, surface materials at the Site are expected to be primarily sandy with some till. The higher infiltration rates seen in **Table 5.3** agree with the expected sandy sediments on-site. Raw data and graphs by R.J. Burnside are provided in **Appendix D**.

Table 5.3 Infiltration Test Results

Location	Depth (m)	Materials	Stable Infiltration Rate (mm/hr)
IT1	0.33	Silt, some sand, trace clay	171
IT2	0.32	Sandy silt, firm, moist, trace clay, bobbles	29
IT4	0.36	Silty clay, some sand, cobbles	327
IT5	0.33	Clayey silt, till, soft, wet, some sand, cobbles, boulders	90
IP1	0.50	Silt, dark brown, some sand, trace clay	200
IP2	0.50	clay silt, soft with coarse gravel	420

The infiltration rate values estimated by R.J. Burnside are generally quite high and reflect the high content of sand and gravel in the shallow deposits at the Site. As described in **Section 6**, the water balance for the Site indicates that groundwater recharge is generally high, reflecting the coarse-grained soils and

TOWN OF CALEDON
PLANNING
RECEIVED
Jul 12, 2021

hummocky topography at the Site. As noted in the discussion of groundwater levels below, the overburden is largely unsaturated across most of the Site, which further enhances groundwater recharge.

In November 2019, COLE completed a series of additional infiltration tests at the Site. Twenty-six (26) additional infiltration tests in 13 locations across the Site were completed using a Guelph Permeameter to further characterize infiltration rates in the shallow overburden. The tests were completed at 1 – 2 m depths whereas the Burnside tests were completed at shallower depths. The results of this infiltration test identified a range of infiltration rates from approximately 40 mm/hour to 170 mm/hr with an average infiltration rate of approximately 100 mm/hour

The results of COLE's 2019 infiltration tests are presented in **Table 5.4** below.

Table 5.4 Infiltration Testing Results (November 2019)

Test ID	Test Depth	Well Hole Soil Description	Kfs (cm/s)	Estimated Percolation Rate (mm/hour)	Geometric Mean Kfs (cm/s)	Geometric Mean Percolation Rate (mm/hour)
Test Pit E, Test 1	1 m	Sand, light brown	1.4E-02	172	1.3E-02	171
Test Pit E, Test 2	2 m	Sand, cobbles, brown, dry	1.3E-02	169		
Test Pit 1, Test 1	1 m	Sand, silt and clay, light brown	1.9E-03	102	2.7E-03	112
Test Pit 1, Test 2	2 m	Sand, coarse cobbles and boulders, brown, moist	3.9E-03	123		
Test Pit 4, Test 1	1 m	Sand, some clay, brown	3.58E-03	120	3.1E-03	116
Test Pit 4, Test 2	2 m	Sand and gravel, boulders and cobbles, brown, moist	2.73E-03	112		
Test Pit A, Test 1	1 m	Silty clay, some sand, boulders and cobbles, light brown, moist	4.09E-04	67	7.5E-04	79
Test Pit A, Test 2	2 m	Sand and gravel, boulders and cobbles, light brown, dry	1.36E-03	93		
Test Pit B, Test 1	1 m	Sand, light brown, moist	7.37E-03	146	6.5E-03	141
Test Pit B, Test 2	2 m	Sand and gravel, very coarse boulders and cobbles, light brown, dry	5.68E-03	136		
Test Pit 3, Test 1	1 m	Silty clay, some sand, light brown, moist	2.60E-05	32	4.9E-05	38
Test Pit 3, Test 2	2 m	Silty clay, some sand, light brown, moist	9.13E-05	45		
Test Pit D, Test 1	1 m	Sand and gravel, some silt, boulders and cobbles, light brown, moist	3.33E-03	118	6.0E-03	139
Test Pit D, Test 2	2 m	Sand and gravel, boulders and cobbles, light brown, moist	1.09E-02	162		
Test Pit 2, Test 1	1.2 m	Silty clay, some sand, light brown, moist	1.09E-05	26	1.1E-04	47
Test Pit 2, Test 2	2 m	Silty clay, some sand, cobbles, light brown, moist	1.02E-03	86		

TOWN OF CALEDON
PLANNING
RECEIVED
Jul 12, 2021

Table 5.4 Infiltration Testing Results (November 2019)

Test ID	Test Depth	Well Hole Soil Description	Kfs (cm/s)	Estimated Percolation Rate (mm/hour)	Geometric Mean Kfs (cm/s)	Geometric Mean Percolation Rate (mm/hour)
Test Pit 8, Test 1	1.2 m	Sandy silt, cobbles, light brown, moist	2.63E-04	60	1.2E-03	89
Test Pit 8, Test 2	2 m	Silty sand, dark brown, moist	5.11E-03	133		
Test Pit 6, Test 1	1 m	Sand and gravel, cobbles and boulders, green, moist	1.17E-02	165	7.1E-04	78
Test Pit 6, Test 2	0.5 m	Silty clay, some sand, dark brown, moist	4.39E-05	37		
Test Pit 5, Test 1	0.5 m	Silt, dark brown, moist	5.19E-04	72	3.4E-04	64
Test Pit 5, Test 2	0.3 m	Silt, some clay, dark brown, moist	2.17E-04	57		
Test Pit C, Test 1	1 m	Sand, some silt, boulders and cobbles, brown, moist	3.09E-03	116	2.2E-03	106
Test Pit C, Test 2	2 m	Sand, some silt, boulders and cobbles, brown, dry	1.61E-03	97		
Test Pit 7, Test 1	0.5 m	Clay silt, cobbles, brown, moist	4.27E-03	126	3.1E-03	116
Test Pit 7, Test 2	0.3	Clay silt, brown, moist	2.29E-03	107		

The 2014 and 2019 infiltration test data suggest that Wentworth Till deposits may underlie the glaciofluvial outwash material in locations at, or near, ground surface across the southernmost 100 m to 150 m of the Site boundaries. Locations underlain by these till deposits exhibited lower percolation rates than locations underlain strictly by the more permeable and gravel. It is noted that even within each depositional soil type (e.g. sand and gravel), local variability is common in glacial sediments.

5.5 Groundwater Levels

Historical groundwater level monitoring on-site was completed by R.J. Burnside between June 2014 and June 2017. COLE began monitoring in October 2017. Water levels from October 2017, June 2018 and March 2020 for on-site wells are provided in **Table 5.5,** and hydrographs for wells historically monitored by R.J. Burnside are provided in **Appendix E**.

Most wells on-site are completed within limestone and shale bedrock units (Amabel and Cabot Head Formations) and are considered to be representative of the bedrock groundwater flow system. A depth to groundwater map based on on-site wells is illustrated on **Figure 12**. Interpolated groundwater elevations and interpreted groundwater flow directions are illustrated on **Figure 13**. Based on the results of the current and historical Site characterization studies, the bedrock aquifer appears to be unconfined and no shallow overburden aquifer is present at the Site.

Groundwater across the Site is typically approximately 12 to 20 m below ground surface (mbgs). Near the on-site wetland features (SWT3-2 and MAS3-1) located at a topographically lower elevation north of the developable area, groundwater is typically between 0 to 1 mbgs. Groundwater near the off-Site wetland features (SWM1-1 and MAM3-1) is also expected to be near ground surface due to their topographically lower elevations. The interpolated depth to groundwater illustrated on **Figure 13** in the area of the headwater drainage features north of the Site should be considered approximate.

TOWN OF CALEDON
PLANNING
RECEIVED

Jul 12, 2021

In general, groundwater elevations mimic the ground surface topography and flows to the northwest toward the West Credit River valley. Groundwater is typically found at greater depths in topographic highs associated with the Paris Moraine and closer to surface in topographic lows associated with the West Credit River valley as well as the wetlands in the north of the Site.

TOWN OF CALEDON
PLANNING
RECEIVED

Jul 12, 2021

Table 5.5 Groundwater Level Measurements

Well ID	Monitoring Point Elevation (masl)	Ground Elevation (masl)	October 2017 Water Level (mbgs)	October 2017 Water Level (masl)	June 2018 Water Level (mbgs)	June 2018 Water Level (masl)	March 2020 Water Level (mbgs)	March 2020 Water Level (masl)
TW1	413.80	412.74	18.16	394.59	17.56	395.18	17.73	395.01
TW1-09	403.69	403.00	15.63	387.37	14.82	388.19	-	-
TW2	402.67	402.07	11.53	390.54	12.23	389.83	10.85	391.22
TW3	402.87	402.32	16.15	386.17	14.80	387.52	14.73	387.59
TW4	405.11	404.51	19.01	385.50	18.53	385.98	18.29	386.22
TW5	405.67	405.13	16.02	389.11	15.05	390.08	15.52	389.61
TW6	406.52	405.90	14.56	391.34	13.86	392.04	13.00	392.90
TW7	405.55	404.97	12.79	392.17	12.27	392.70	12.62	392.35
TW8	406.54	405.88	20.41	385.47	19.75	386.13	19.68	386.20
TW9	405.29	404.70	14.17	390.53	14.06	390.63	14.05	390.65
TW10	403.38	402.58	15.03	387.54	14.35	388.23	13.99	388.59
TW11	406.77	406.07	20.50	385.57	20.06	386.01	19.79	386.28
TW12	402.78	402.05	14.09	387.96	14.18	387.87	13.34	388.71
MW1-14S	401.33	400.63	Dry	Dry	Dry	Dry	-	-
MW1-14D	401.33	400.63	11.26	389.37	11.03	389.61	-	-
OW1	390.78	390.01	Dry	Dry	4.70	385.31	-	-
PW3	401.77	401.33	16.12	385.22	15.88	385.46	-	-
PZ2-14	390.33	389.46	0.83	388.60	0.31	389.15	-	-

TOWN OF CALEDON
PLANNING
RECEIVED
Jul 12, 2021

Seasonal groundwater fluctuations are seen in the hydrographs (**Appendix E**) and indicate a general trend of decreasing water levels in the summer and fall and increasing water levels in the winter and spring. On average across the Site, seasonal water level changes are not greater than 3 m, with the exception of TW2 which experiences larger seasonal groundwater changes up to approximately 6 m. TW2 is located within the coarse-grained depression feature, where external seasonal run-off enters the site, and thereby acts as the area of focussed recharge for the off-Site drainage run-off feature.

5.6 Groundwater Flow and Hydraulic Gradients

Groundwater elevation contours based on on-site wells and topographic elevations at the West Credit River can be seen on **Figure 13**.

Groundwater elevations on-site range from approximately 385 masl to approximately 395 masl, with the water table found typically close to the bedrock / overburden interface. In general, groundwater elevations are higher in the south and lower in the north of the Site, mimicking the Site topography. Groundwater contours indicate horizontal groundwater flow within the bedrock is approximately south to north on-site, towards the West Credit River Based on the measured groundwater elevation data, the horizontal hydraulic gradient data ranged from approximately 0.01 m/m to 0.02 m/m, with an average of 0.013 m/m.

Vertical hydraulic gradients were not determined since nested monitoring wells were not installed on the Site. Regardless, based on regional mapping (Davies and Holysh, 2007), downward gradients are expected across the site. Upward gradients associated with groundwater discharge to surface is expected to occur in the West Credit River valley.

5.7 Groundwater Quality

Groundwater quality samples were collected by R.J. Burnside from twelve (12) on-site wells between 2015 and 2017 and two (2) off-Site wells in 2015. The collected groundwater samples were sent to AGAT Laboratories for analysis of general inorganics, metals and total suspended solids to characterize the baseline groundwater quality at the Site. Results were compared to the Ontario Drinking Water Standards (ODWS) to identify potential exceedances of water quality parameters. Results for select parameters from the twelve (12) on-site wells from March 3, 2017 indicate that there were no exceedances of health related ODWS. Results of the analysis do show exceedances of some aesthetic and operational ODWS for some samples.

Supplementary re-sampling of the twelve (12) on-site wells was completed by COLE in October 2017, June 2018, and in March 2020. In both the 2017 and 2018 sampling events, the samples were submitted to Maxxam Analytics Inc. for nitrate analysis. In March 2020, the samples were submitted to ALS Laboratories for analysis including nitrate/nitrite, sulphate, iron, pesticides, herbicides and/or bacteriological parameters. The addition of sulphate, iron, pesticides, herbicides and/or bacteriological parameters to the list of parameters analyzed was intended to address various agency and / or peer review. In addition, groundwater parameters including pH, temperature, conductivity, and turbidity were monitored and samples were collected after all parameters had stabilized.

Results were compared to the ODWS and are presented in **Table 5.6** and **Table 5.7** below. For full analytical results and certificates of analysis, please refer to **Appendix F** and **Appendix G**.

Sulphate concentrations remain elevated above the aesthetic objective in the ODWS in the groundwater sample collected from TW12. This is similar to historical results from this well. This test well is drilled into the deeper underlying shale formation (interpreted to be the Cabot Head Formation), while the remaining wells are installed within the dolostone aquifer. Based on a large study of aquifers in southern Ontario

TOWN OF CALEDON
PLANNING
RECEIVED
Jul 12, 2021

(Singer *et al*., 2003), the groundwater quality sulphate rating from wells screened within Queenston Formation shale was considerably poorer than wells screened with the Amabel Formation. The Queenston Formation and Cabot Head Formation aquifers are reasoned to be of a similar quality. It is understood that the proposed domestic water wells should draw water from dolostone aquifer.

All four (4) groundwater samples collected from TW1, TW3, TW6, and TW8 and submitted for the analysis of pesticides and herbicides did not detect any concentration of these parameters above the minimum laboratory detection limit, which are below the ODWS, which suggests that historical on-site and neighboring agricultural activities have not negatively impacted groundwater quality at the Site. All of these wells are located within the agricultural area of the Site.

Total coliforms were detected in five (5) of the twelve (12) tested groundwater samples at counts ranging between 1 and 66,000 colony forming units per 100 mL, above the ODWS guidelines of 0 CFU/100 mL. The presence of any level of total coliform bacteria indicates the possibility that pathogenic microbes may be present in the water but is not necessarily indicative of unsafe drinking water.

The New Jersey Department of Environmental Protection (NJDEP) maintains the largest database of accumulated water quality data from domestic well sources, including data from over 97,000 domestic wells collected over 15 years (Procopio *et al*., 2017). Based on a regional-scale analysis of coliform data by the NJDEP, it was identified that repeated testing increases the likelihood that coliform bacteria were detected in samples and that "often, when coliforms were detected following two or more tests, the initial test result was negative"). It is noted that several of the test wells utilized in the sampling program have been monitored and sampled upwards of fourteen (14) times over a five (5) year period. It was further determined that "if a chromogenic or enzyme substrate test method is used, and if the well is located in sedimentary rock…90% of all such wells would have a positive test result after just five samples". Sedimentary rock, especially dolomite and limestone, are the most vulnerable to high coliform detection (Procopio et al., 2017). It is noted that E. Coli was not detected in any of the twelve (12) sampled test wells, which is considered to be a more reliable indicator of fecal waste contamination. For full analytical results and certificates of analysis, please refer to **Appendices F** and **G**.

Remaining parameters with exceedances of ODWS include total dissolved solids, sulphate, turbidity, and iron. These parameters are considered aesthetic guidelines that are established for parameters that impair the taste, odour or colour of water but do not directly affect the safety of the water supply.

The water hardness at the Site and other aesthetic parameters (turbidity, sulphate, total dissolved solids, and iron) can be improved with water treatment systems for each property, including a water softener.

Information about a commonly employed residential water quality treatment unit that could be considered for the Site is provided in **Appendix H**. There are many commercially available residential water quality treatment systems capable of reducing concentrations of health-related parameters (such as nitrate) in groundwater. Further, each newly installed domestic well will require the completion and documentation of a short-duration pumping test to assess the chemical and microbiological quality of the water and well capacity.

TOWN OF CALEDON
PLANNING
RECEIVED

Jul 12, 2021

Table 5.6 Select Groundwater Quality Results from March 2020

Water Quality Parameter	Units	ODWS		RDL	TW1	TW2	TW3	TW4	TW5	TW6
		OG	AG							
Total Coliform	CFU/100 mL	0	-	0	0	66,000[1]	0	0	38	0
E. Coli	CFU/100 mL	0	-	0	0	0	0	0	0	0
Total Dissolved Solids	mg/L	-	500	20	413	75	513	302	368	389
Nitrate as N	mg/L	10	-	0.02	<0.02	1.02	0.127	2.26	8.42	7.56
Nitrite as N	mg/L	1	-	0.01	<0.01	0.043	<0.01	<0.01	<0.01	<0.01
Sulphate	mg/L	-	500	0.3	71.5	1.8	147	14.9	16.5	17.5
Turbidity	NTU	-	5	0.5	23.3	66.4	23.9	0.28	1.17	0.34
Iron	mg/L	-	0.3	0.05	4.89	9.18	4.51	<0.05	<0.05	<0.05

1.7 Sample exceeded ODWS OG or AG
RDL Reportable Detection Limit
- No value available
ODWS Ontario Drinking Water Standard
OG Operational Guideline
AG Aesthetic Guideline
[1] Laboratory Handling Error – missed dilution

TOWN OF CALEDON
PLANNING
RECEIVED

Jul 12, 2021

Table 5.7 Select Groundwater Quality Results from March, 2020 Continued

Water Quality Parameter	Units	ODWS		RDL	TW7	TW8	TW9	TW10	TW11	TW12
		OG	AG							
Total Coliform	CFU/100 mL	0	-	0	0	7	17	1	0	0
E. Coli	CFU/100 mL	0	-	0	0	0	0	0	0	0
Total Dissolved Solids	mg/L	-	500	20	345	346	310	41	314	1,670
Nitrate as N	mg/L	10	-	0.02	7.37	5.05	1.74	<0.02	2.72	<0.1
Nitrite as N	mg/L	1	-	0.01	<0.01	<0.01	<0.01	<0.01	<0.01	<0.05
Sulphate	mg/L	-	500	0.3	18	32.9	19.1	<0.3	15.2	991
Turbidity	NTU	-	5	0.5	1.97	14.7	2.4	3.33	5.13	13.8
Iron	mg/L	-	0.3	0.05	0.061	1.18	0.112	1.21	1.61	2.26

1.7 Sample exceeded ODWS OG or AG
RDL Reportable Detection Limit
- No value available
ODWS Ontario Drinking Water Standard
OG Operational Guideline
AG Aesthetic Guideline

TOWN OF CALEDON
PLANNING
RECEIVED

Jul 12, 2021

Table 5.8 Nitrate Concentrations on-site

Nitrate Concentrations (mg/L)															
Well ID	Apr 2015	Jun 2015	Sept 2015	Nov 2015	Feb 2016	Mar /Apr 2016	June 2016	Sept 2016	Dec 2016	Mar 2017	May 2017	Oct 2017	June 2018	March 2020	Average
TW1	-	-	-		-	-	-	-	-	<0.05	<0.05	<0.10	ND	<0.2	**N/A**
TW2	0.84	0.70	1.00	0.62	-	0.58	1.18	0.82	0.67	1.16	1.90	1.01	0.70	1.02	**0.94**
TW3	-	-	-	-	-	0.54	-	-	-	0.62	0.58	0.21	0.19	0.127	**0.38**
TW4	-	-	-	-	-	3.0	-	-	-	3.43	3.22	1.95	1.29	2.26	**2.53**
TW5	6.31	8.28	7.77	7.09	-	7.80	6.72	7.18	6.34	6.76	7.99	8.41	8.38	8.42	**7.50**
TW6	7.80	8.20	7.30	-	-	8.23	-	-	-	8.52	9.08	7.87	8.58	7.56	**8.13**
TW7	-	-	-	-	8.52	7.27	6.32	6.97	5.97	5.77	6.87	8.13	7.19	7.37	**7.04**
TW8	-	-	-	-	8.25	7.76	5.35	7.85	7.41	6.68	5.15	6.47	4.36	5.05	**6.43**
TW9	-	-	-	-	3.65	3.41	2.99	2.17	1.51	2.68	3.02	2.81	2.76	1.74	**2.67**
TW10	-	-	-	-	2.41	-	-	-	-	1.68	0.85	1.63	1.35	<0.02	**1.58**
TW11	-	-	-	-	4.61	5.03	3.00	4.08	3.58	3.94	3.00	3.41	2.21	2.72	**3.56**
TW12	-	-	-	-	-	<0.25	-	-	-	<0.25	<0.10	<0.10	ND	<0.1	**N/A**

Note:
- Indicates no sample collected

TOWN OF CALEDON
PLANNING
RECEIVED
Jul 12, 2021

With respect to nitrate, **Table 5.8** presents a summary of the recent and historical nitrate results. Results were compared to ODWS for nitrate-nitrogen, 10 mg/L, to identify potential exceedances. Results of the analysis showed no exceedances of the ODWS for nitrate for any samples. Higher concentrations (>5 mg/L) were observed within the northern portion of the Site in five (5) wells (TW5, TW6, TW7, TW8 and TW11). Average nitrate concentrations across the Site from all sampling results can be seen in **Figure 14**.

The on-site areas with higher nitrate concentrations are likely a result of the historical and current agricultural activities occurring both on-site and southeast of the Site (up-gradient of the site). The highest concentrations of nitrates are found in downgradient portions of the Site, and also coincide with where the overburden cover is thinnest. There is a small agricultural area adjoining the Site to southeast which extends to the forested area associated with the Paris Moraine. The total area currently being farmed is approximately 76 ha, with roughly 52 ha being on-site and 24 ha being off-site. No other significant agricultural areas appear to be present south of the Site to the groundwater divided associated with the Silver Creek Subwatershed boundary south of The Grange Sideroad based on aerial photographs and a site reconnaissance. Therefore, most of the nitrate inputs to the groundwater system are from the area being farmed and the adjacent fields to the southeast.

The change of land use to residential will therefore eliminate roughly 68% of agricultural fertilizer inputs to groundwater at the Site. Development of the Site will result in a reduction of the agricultural surface areas suspected of contributing to the on-site nitrate concentrations by approximately 68%. Therefore, development of the Site is expected to lead to a long-term decrease in nitrate concentration on-site.

Practical evidence from similar projects in the local geographic area suggest that the anticipated natural nitrate concentration reduction may be close to an order of magnitude (CVC, 2011). Based on similar development projects in the area, particularly the development of a subdivision of south Erin Village at the intersection of Wellington Road 52 and 9th Line with similar underlying geology, demonstrates the natural reduction of nitrate concentrations due to conversion from agricultural land to residential subdivision. Nitrate concentrations in this area were greater than 30 mg/L at select monitoring locations in the late 1990s when the area was used for agricultural purposes. Following subdivision development, nitrate concentrations have declined to an average of approximately 3.5 mg/L within approximately 10 years (CVC, 2011).

In addition, Terraprobe (1990) referenced the Caledon Mountain Estates subdivision to the east of the Site on the east side of Mississauga Road. This subdivision was constructed in the mid-1970s and is also underlain by coarse overburden overlying dolostone and shale. Nitrate concentrations in groundwater quality samples collected by Terraprobe from domestic wells within this subdivision ranged between 0.6 mg/L and 2.4 mg/L, suggesting that potentially low nitrate loading on the subdivision and sufficient dilution in the subsurface (Terraprobe, 1990).

As current nitrate concentrations are expected to be a result of current and historic agricultural activities on-site and surrounding the site, a similar reduction in nitrate is expected following residential development.

5.8 Groundwater – Surface Water Interactions

5.8.1 Water Courses

As noted in **Section 3.1**, a small headwater drainage feature flows from off-Site near PZ1-14 onto the Site from the south near TW2 and MW1-14, where it appears to infiltrate through a depression into the thick coarse-grained (outwash) overburden. This feature corresponds to the ephemeral drainage feature labelled RB1 in Savanta (2018). Although this feature has been referred to as a “disappearing stream” or “underground stream” potentially associated with karst by MNRF staff, the relatively thick overburden at the Site reduces the possibility of this feature being a result of local karst features. Based on available

TOWN OF CALEDON
PLANNING
RECEIVED
Jul 12, 2021

mapping, there is the potential for karst in the Belfountain area. However, the loss of flow in the headwater drainage feature is interpreted to be the result of a losing reach once the stream crosses onto the highly permeable outwash deposits from the lower permeability Wentworth Till units to the south. Mapping from the ORM Groundwater Program supports the interpreted high recharge rates of up to approximately 500 mm/year across portions of the Site with mapped outwash deposits. Further, the depth to groundwater across the Site ranges from about 12 m to 20 m and the depth to bedrock, where karst could occur, ranges from approximately 8 m to 30 m. Travel time through the unsaturated zone (in overburden) is expected to range from 4 to 10 years using the unsaturated zone advection time ("UZAT") method (MOE, 2006). As such, it is COLE's opinion that karst is not responsible for the loss of flow in RB1. The on-site portion of the small headwater drainage feature was observed by COLE staff to be dry during a Site visit in October 2017 but flowing during a Site visit in March 2020.

Therefore, this feature is interpreted to be an ephemeral feature contributing groundwater recharge after precipitation, snowmelt and freshet events. The feature is not directly connected to the headwater tributary RA1 north of the Site. As noted in Section 3.1, RA1 is interpreted to be supported from groundwater discharge off site where fish apparently has been seen.

Groundwater levels at PZ1-14, in the edge of the headwater drainage feature at the edge of the wooded area associated with the Paris Moraine, are consistently below ground surface by approximately 1 m. Similarly, groundwater levels at TW2 and MW1-14 are consistently below ground surface during all times of year when data was collected indicating that this feature is not supported locally by groundwater discharge but provides a groundwater recharge function (i.e., is a losing reach). The higher groundwater elevations recorded at PZ1-14 compared to TW2, MW1-14 are due to the higher ground surface elevation in that area. The hydrograph for PZ1-14, which is provided in **Appendix E**, shows that this piezometer frequently goes dry further supporting the interpretation of recharge conditions and a localized perched system associated with the Paris Moraine and is not representative of the underlying groundwater table.

No other water courses are seen on-site. Off-site, the West Credit River likely receives groundwater contributions that maintain the base flow of this cold-water fish habitat.

5.8.2 Wetlands

One piezometer, PZ2-14, was installed to a depth of approximately 1 mbgs in one of the on-site wetland units (SWT3-2). A hydrograph illustrating water level fluctuations relative to ground surface for PZ2-14 is provided in **Appendix E**.

Examination of the water levels in PZ2-14 shows variable groundwater levels that are consistently below ground surface with the exception of very wet spring conditions when groundwater levels are only slightly above ground surface (maximum of 4 cm above ground surface). As a result, groundwater contributions to SWT3-2 are estimated to be minimal.

Although, there is no direct groundwater monitoring data for wetland unit MAS3-1 on-site, the ground elevation (as indicated by cross-section A-A' on **Figure 9**) is very similar to SWT3-2 and thus groundwater is expected to be at a similar elevation as STW3-2, or slightly deeper, as it declines towards the West Credit River. Observations made during a Site visit on November 8, 2017 confirm that groundwater is approximately 0.86 mbgs within SWT3-2 and no standing water was visible within MAS3-1.

The two off-Site wetland units (SWM1-1 / MAM3-1) do not have groundwater level monitoring data, thus, groundwater contributions cannot be accurately quantified. Based on a Site visit on November 8, 2017, SWM1-1 was observed to have standing water and wet soils. Therefore, groundwater contributions to SWM1-1 appear to be present. Although groundwater contributions to the off-Site wetlands are not quantified, they are not within the radius of influence or the radius of contribution of the closest potential on-Site supply well and the proposed development will maintain pre-development infiltration rates thus,

TOWN OF CALEDON
PLANNING
RECEIVED
Jul 12, 2021

no groundwater impacts to the off-Site wetlands are anticipated. Additional discussion of the potential impacts to the off-Site wetland features are described in **Section 7.2.2**.

5.9 MECP Well Records

A MECP well records search was conducted for a 500 m radius around the Site. A total of 145 wells were identified within a 500 m radius of the Site. Based on the MECP well records, the majority (81%) of the nearby wells were identified as water supply wells. The search results are provided in **Appendix I** and are summarized in **Table 5.9** below. The locations of nearby MECP well records are shown on **Figure 15**.

Table 5.9 Summary of MECP Well Records within a 500 m Radius Around the Site

Well Use	Number of Wells	Percent of Wells
Water Supply	118	81.38
Abandoned	11	7.59
Monitoring/Test Hole	8	5.52
Observation	7	4.82
Unfinished	1	0.69
Total	**145**	**100**

A search of permitted water takers within a 500 m radius around the Site was conducted in December 2017 through the MECP digital data request process. No active permitted groundwater takers were identified.

As noted in **Section 4.1**, a private residential well survey at 63 residences in the Belfountain area was conducted by Terraprobe in 1988 and contact was made with 13 residents. An additional private well survey was conducted by Terraprobe in 1989 at 81 residences and 31 responses were received. A third survey was conducted at select residences in 1990 in the Caledon Mountain Estates. Based on the findings from the private well surveys, Terraprobe found that water supply from shallow dug wells had generally poor quality and quantity in contrast to drilled wells. Based on ORM Groundwater Program mapping, three (3) dug wells remain downgradient of the Site. COLE will verify the presence of dug wells during the Spring field survey, pending landowner approval.

In 2019, the Manors of Belfountain sent letters to residents within 500 m of the Site inviting them to participate in a door-to-door well survey for this project. To date, only one response confirming agreement to participate in the survey has been received. As discussed at the March 2020 agency comments review meeting, the applicant will work with the Town and Region to conduct door-to-door surveys in a timely manner to provide a representative assessment of current domestic well conditions in the community.

6 Impact Assessment

6.1 Water Balance

As part of the hydrogeological investigation, a water balance analysis was completed to determine the pre- and post-development recharge and runoff conditions at the Site based on recent climate data.

6.1.1 Background

For any system with defined boundaries, a water balance can be used to estimate the individual components of the hydrologic cycle. This exercise consists of an accounting of the transfer of water across

TOWN OF CALEDON
PLANNING
RECEIVED
Jul 12, 2021

the system's boundaries over a certain period of time whereby any difference between inflows to the system and outflows from the system is balanced by a change of storage within the system.

In order to understand the components of the hydrologic cycle under existing conditions, a water balance analysis was conducted for the Site. The discussion below provides details on the methodology used and the results obtained from the analysis. A summary of the calculations is provided in **Appendix J**.

6.1.2 Methodology

A Site scale water balance analysis was completed in order to estimate the components of the hydrologic cycle for the Site, and was modelled using the following equation:

$P = \triangle GS + ET + R + I$

Where:

P	=	Precipitation, which represents the sum of all rainfall and snowfall
$\triangle GS$	=	Change in groundwater storage
ET	=	Evapotranspiration
R	=	Runoff
I	=	Infiltration

The water balance for the Site was developed using the Thornthwaite and Mather (1955) methodology as outlined in Chapter 3 of the SWM Planning & Design Manual (MOE, 2003). The methodology roughly estimates yearly evapotranspiration, infiltration and runoff volumes based on soil types, ground cover, topography, and annual precipitation.

Monthly mean temperature and monthly precipitation data were used in the Thornthwaite Equation to estimate the monthly potential evapotranspiration. The estimated monthly potential evapotranspiration was adjusted using a daylight correction factor to account for varying length of daylight throughout the year based on latitude. The actual evapotranspiration was then determined by accounting for a change in soil moisture storage.

The monthly water surplus (amount of water available to infiltrate or runoff) was estimated by calculating the difference between monthly precipitation and actual evapotranspiration. Infiltration was estimated by multiplying a set of infiltration factors (dependent on the topography, soil type, and land cover) to the estimated water surplus. Runoff was considered to be the remainder of the water surplus that was not infiltrated.

6.1.3 Site Water Balance

Site specific parameters used to calculate the Site water balance as described in **Section 6.1.2** were determined as follows.

Precipitation and temperature data were obtained from the Environment Canada Orangeville MOE Weather station (Climate ID: 6155790), the nearest station to the Site. The most recent climate data (2010-2015) was used in the water balance analysis to provide a general understanding of the climate on-site, accounting for the effects of climate change, while averaging out the effects of wet and dry years. The results were also compared with the available 30-year climate normal period from 1981-2010.

The Site was divided and classified according to agricultural areas and wooded areas. Infiltration factors were selected for each area from Table 3.1 in the Stormwater Management Planning and Design Manual (MOE, 2003). Ground cover and topography infiltration factors were informed from Site visits and using aerial photographs. Agricultural areas were considered flat lands due to closed depressions whereas wooded areas were considered hilly lands based on topographic slope.

TOWN OF CALEDON
PLANNING
RECEIVED
Jul 12, 2021

Surficial soil infiltration factors were informed from Site borehole logs and determined to be predominantly sand. Soil moisture capacities were also determined from the MOE 2003 document and informed by ground cover and soil type. Infiltration factors and soil moisture capacities for the different areas are summarized in **Table 6.1**.

Table 6.1 Summary of Infiltration Factors and Soil Moisture Capacity

Area	Area (ha)	Infiltration Factor (Topography)	Infiltration Factor (Soil)	Infiltration Factor (Cover)	Soil Moisture Capacity (mm)
Agricultural	50.27	0.30	0.40	0.10	75
Wooded	20.01	0.10	0.40	0.20	250

6.1.4 Pre-Development Water Balance Analysis Results

The results of the Site-wide pre-development water balance are summarized in **Table 6.2**. The time period used for the analysis was 2010-2015 to allow for an understanding of average magnitudes of the components of the hydrologic cycle, while accounting the most recent data.

Table 6.2 Results of Pre-Development Water Balance Analysis for 2010-2015

	Hydrologic Cycle Component	Agricultural Lands		Wooded Areas		Total
		(mm/year)	(m^3/year)	(mm/year)	(m^3/year)	(m^3/year)
Inputs	Precipitation	898	451,341	898	179,656	630,997
	Total inputs		**451,341**		**179,656**	
Outputs	Evapotranspiration	542	272,363	565	113,149	385,512
	Change in soil storage	0	0	0	0	0
	Runoff	71	35,793	100	19,951	55,744
	Infiltration	285	143,173	233	46,552	189,725
	Totals outputs		**451,341**		**179,656**	

The result using the 30-year climate normal period from 1981 to 2010 data were generally similar as outlined in **Table 6.3**.

Table 6.3 Results of Pre-Development Water Balance Analysis for 1981 to 2010

	Hydrologic Cycle Component	Agricultural Lands		Wooded Areas		Total
		(mm/year)	(m^3/year)	(mm/year)	(m^3/year)	(m^3/year)
Inputs	Precipitation	901.6	453,234	901.6	180,410	633,644
	Total inputs		**453,234**		**180,410**	
Outputs	Evapotranspiration	526	264,422	548	109,684	374,106
	Change in soil storage	0	0	0	0	
	Runoff	75	37,762	106	21,218	58,980
	Infiltration	300	151,050	247	49,508	200,558
	Totals outputs		**453,234**		**180,410**	

TOWN OF CALEDON
PLANNING
RECEIVED
Jul 12, 2021

Using the 2010-2015 dataset, infiltration comprises approximately 30% of the total precipitation across the entire Site, runoff comprises approximately 9% of total precipitation, and evapotranspiration comprises more than half (61%) of total precipitation. The water balance analysis shows a significant amount of infiltration on the Site. This is expected due to the hummocky topography with many closed depressions and sandy overburden materials. Details of the water balance analysis are presented in **Appendix J**.

Runoff for the wooded areas was estimated to be higher than the agricultural areas due to the steep topography across the northeastern portion of the Site, where maximum topographic slopes of up to 50 m/km were observed. In comparison, the agricultural areas of the Site were flatter with observed slopes ranging between 0 m/km to 2 m/km.

The Thornthwaite and Mather water balance methodology provides a simplified approximation of the water balance for a given site. The methodology does not account for yearly changes in groundwater elevations. As such, it is important to note that the evapotranspiration, runoff, and infiltration values estimated using this method are understood to be approximations. A more detailed analysis of Site grading and potential for runoff is presented in the Functional Servicing Report (FSR) prepared by COLE and submitted under separate cover.

Potential impacts to the Site water balance from the proposed development are discussed in **Section 7**. It is currently understood that infiltration measures will be utilized to maintain or enhance pre-development infiltration on-site in post-development conditions, with essentially no runoff leaving the Site up to the 100-year storm event. The detailed discussion of the stormwater management approach is described in the FSR.

6.1.5 Post-Development Water Balance Analysis Results

Based on the grading plan completed for the Site by COLE as part of the accompanying Functional Servicing Report, the impervious ground cover post-development has been estimated to represent approximately 18% of the Site, being comprised of concrete sidewalks, driveways, rooftops and the proposed local roads. The post-development assumed land cover is summarized in **Table 6.4**, below:

Table 6.4 Post-Development summary of Infiltration Factors and Soil Moisture Capacity

Area	Area (ha)	Infiltration Factor (Topography)	Infiltration Factor (Soil)	Infiltration Factor (Cover)	Soil Moisture Capacity (mm)
Residential	30.54	0.30	0.40	0.05	50
Open Space	7.90	0.30	0.40	0.15	100
Wooded	22.19	0.10	0.40	0.20	250
Impervious	9.56	0	0	0	0

The results of the Site-wide post-development water balance are summarized in **Table 6.5.**

Table 6.5 Results of Post-Development Water Balance Analysis for 2010-2015

	Hydrologic Cycle Component	Residential		Open Space		Wooded Areas		Impervious		
		(mm/year)	(m^3/year)	(mm/year)	(m^3/year)	(mm/year)	(m^3/year)	(mm/year)	(m^3/year)	% Total
Inputs	Precipitation	898	274,198	898	70,928	898	199,225	898	85,832	100%
	Total inputs		**274,198**		**70,928**		**199,225**		**85,832**	
Outputs	Evapotranspiration	531	162,115	549	43,363	565	125,476	180	17,167[1]	55.2%

TOWN OF CALEDON
PLANNING
RECEIVED
Jul 12, 2021

Table 6.5 Results of Post-Development Water Balance Analysis for 2010-2015

	Hydrologic Cycle Component	Residential		Open Space		Wooded Areas		Impervious		
		(mm/year)	(m^3/year)	(mm/year)	(m^3/year)	(mm/year)	(m^3/year)	(mm/year)	(m^3/year)	% Total
	Change in soil storage	0	0	0	0	0	0	0	0	
	Runoff	92	28,019	52	4,135	100	22,125	718	68,665	19.5%
	Infiltration	275	84,057	297	23,430	233	51,624	0	0	25.2%
	Totals outputs		**274,198**		**70,928**		**199,225**		**85,832**	

[1]Note: 20% evapotranspiration on impervious surfaces has been assumed

In **Table 6.4** and **Table 6.5**, the residential area represents all residential lots minus the driveways and roofs, the open space represents the park (Block 76 of the April Draft Plan), the Open Space (Block 84), and the SWM pond areas (Blocks 81, 82, and 83).

Based on the water balance analysis for post-development conditions, infiltration comprises approximately 25% of the total precipitation across the entire Site, runoff comprises approximately 20% of total precipitation, and evapotranspiration comprises more than half (55%) of total precipitation.

159,111 m^3/year of infiltration is expected in post-development conditions, which represents a net reduction in infiltration of 30,615 m^3/year (approximately 16% deficit) across the Site as a result of the development. In response to this expected infiltration reduction, two (2) stormwater management ponds are proposed to be installed across the Site, which are expected to decrease runoff and increase overall infiltration back to pre-development levels. Currently, the stormwater management ponds are sized to retain the runoff volumes generated from two (2) back-to-back 100-year storm events and are designed without a typical outlet structure, relying on infiltration as the primary outflow.

The pre- and post-development water balances, along with a comparison summary between them, can be found in **Appendix J**. It should be noted that in both the pre- and post-development water balance, the wooded area (Block 78) has a higher runoff rate that agricultural or residential areas due primarily to the steeper slopes in the wooded area.

COLE's May 2020 Functional Servicing Report (COLE, 2020) outlines the proposed operations and maintenance schedule for the proposed SWM facilities. As discussed in that report, during the first two (2) years of operation, the SWM facilities (including SWM ponds, dry wells, ditches, and oil / grit separator units) should be inspected after every significant storm event to ensure proper functioning (average is about four (4) inspections per year). After this initial time period, and confirmation that the SWM facilities are functioning as intended, frequency of inspections may be lessened to once per year (annually). An inspection report should be filled out during each inspection and kept on file. A standalone Operations & Maintenance Manual will be prepared at detailed design to address the specific maintenance activities applicable to each of the proposed SWM facilities.

6.2 Water Quality Impact Assessment

6.2.1 Nitrates

6.2.1.1 Nitrate Loading Calculations

Nitrate loading analysis was completed in order to evaluate the potential impact of individual on-site septic systems in compliance with MOECC Procedure D-5-4 and as informed through consultation with CVC. This procedure is outlined below and assumes that every lot will have a tertiary (Level IV) treatment system such as the Waterloo Biofilter Systems Inc. standard system shown in **Appendix H** that successfully reduces total nitrogen concentrations in effluent by 50-65%.

TOWN OF CALEDON
PLANNING
RECEIVED
Jul 12, 2021

The equation applied to estimate the influence of the septic systems on nitrate concentrations in groundwater is:

$$n_r = \frac{n_w * V_w}{V_T}$$

Where n_r is the resulting nitrate concentration at the property boundary (mg/L), n_w is the nitrate concentration in the effluent (mg/L), V_w is the volume of effluent (m^3/year), and V_T is the total dilution volume (m^3/year), which is a sum of annual recharge volume (as determined from the Site water balance analysis **Section 6**, assuming infiltration post-development is maintained) and effluent volume (V_w).

Nitrate loading calculations for the Site assume an effluent discharge of 1000 L/lot/day from the 75 proposed lots. It was also assumed that implementation of tertiary (Level IV) treatment systems will be applied across all 75 on-site septic systems, resulting in a nitrate loading of 20 g/lot/day, which is half the expected concentration of 40 g/lot/day from traditional septic systems. It is understood that a ten-year operation and maintenance agreement of the proposed treatment systems will be enforced through the subdivision agreement.

In addition, it is understood that the planned septic systems will only produce nitrate and conversion of ammonia to nitrate (nitrification) is assumed to be complete in these systems. Therefore, it is not necessary to estimate groundwater concentrations for nitrite or un-ionized ammonia, which is also consistent with CVC review of potential septic system impacts. The analysis of nitrate loading at the property boundary is shown below and assumes an annual dilution volume from recharge of 189,725 m^3/year as described in **Section 6.1**:

$$n_r = \frac{\left(20\ \frac{g}{lot.day} * 1{,}000 \frac{mg}{g} * \frac{1}{1000 \frac{L}{lot.day}}\right)\left(1{,}000 \frac{L}{lot.day} * 75\ lots * 365 \frac{day}{year} * \frac{m^3}{1000\ L}\right)}{\left(1{,}000 \frac{L}{lot.day} * 75\ lots * 365 \frac{day}{year} * \frac{m^3}{1000\ L}\right) + \left(189{,}725 \frac{m^3}{year}\right)}$$

$$n_r = \frac{(20\ mg.L^{-1})(27{,}375\ m^3.year^{-1})}{(27{,}375 + 189{,}725\ m^3.year^{-1})} = 2.52\ mg.L^{-1}$$

It is also important to note that the nitrate loading analysis outlined in the MECP guidance does not consider the complex spatial and temporal variability of nitrate concentrations. Therefore, the nitrate loading concentration determined for the Site is an estimate of the average nitrate concentration expected across the entire Site.

6.2.1.2 Nitrate Loading Results

From the nitrate loading analysis, which was completed in compliance with MOECC Procedure D-5-4 and consistent with CVC's review approach, a nitrate loading concentration of approximately 2.52 mg/L is estimated at the Site boundary. This concentration is below the ODWS for nitrate of 10 mg/L and also lower than the CCME guideline for NO_3-as-N of 3 mg/L, which has been adopted by CVC. As on-site wetland features (SWT3-2 and MAS3-1) are essentially at the Site boundary, and any groundwater seepage locations appear to be beyond the Site boundary, the CCME / CVC guideline is met at all downgradient natural features that may receive even minimal groundwater discharge.

The existing nitrate concentrations at the Site (as discussed in **Section 5.7**) are interpreted to reflect nitrate loading from on-site and adjacent agricultural activities.

TOWN OF CALEDON
PLANNING
RECEIVED
Jul 12, 2021

With development of the Site, the surface area interpreted to contribute to nitrate loading from agricultural activities will be reduced by approximately 68%, corresponding to the approximately 52 ha existing agricultural land south of the groundwater divide (approximately the boundary between the Silver Creek and West Credit River subwatershed) that comprises the Site. As a result, it is anticipated that long-term background nitrate concentrations will decline over time.

A 2011 CVC study showed that, for a similar subdivision development project in Erin, there was a natural reduction of nitrate concentrations in local municipal wells after the agricultural land was converted to a residential subdivision. That subdivision was in Erin approximately 4 km west of the Site at the intersection of Wellington Road 52 and 9th Line. In that study, thee area was used as agricultural area where there was a turkey operation. Following development and conversion to a subdivision of Erin Village, over the last 10 years, nitrate concentrations have declined to an average of approximately 3.5 mg/L (CVC, 2011). Similarly, a 1992 Terraprobe investigation of the Site indicated a lack of groundwater quality impacts in the adjacent 55-lot Caledon Mountain Estates subdivision after development.

As the overburden at the Site ranges between 10 m to 20 m, the treated septic effluent and precipitation mix would take approximately 4 to 10 years to be initially detected at the groundwater table from a land use change from agriculture to rural residential. This amount of time was calculated as the unsaturated zone advection time or UZAT (MECP, 2006). This is sufficient time for the natural destruction of bacteria and viruses in the sewage. The porous, aerobic conditions of the overburden (sand and gravel) at the Site also lend favorably to natural attenuation.

6.2.1.3 Line of Higher Nitrate Concentrations

All available groundwater quality results for on-site wells indicate that existing on-site nitrate concentrations are below the ODWS, and long-term nitrate concentrations are anticipated to decrease due to the reduction in agricultural activity on the site. However, as a precautionary approach it is recommended that supply wells should not be installed in the northernmost portion of the Site where the highest on-site nitrate concentration are identified. Specifically, it is recommended that supply wells not be placed north of an estimated line of higher nitrate concentrations (i.e., > 7 mg/L). The line of higher nitrate concentrations is shown on **Figure 14** and is located based on the average nitrate concentrations at test wells TW8 and TW7 of slightly less than 7 mg/L.

To identify if any additional setback distance may be required between supply wells and the line of higher nitrate concentrations, a radius of contribution analysis was completed and is discussed in **Section 6.3.4.** As discussed in **Section 6.3.4**, the radius of contribution analysis suggests that an additional setback of 7 m from the line of higher nitrate concentrations, shown as the 7 m setback line in **Figure 14**, is warranted in recognition of the estimated area from which groundwater contributes to the supply wells. Therefore, supply wells located at least 7 m upgradient (south) of the line of higher nitrate concentrations are not expected to draw groundwater from the area with higher nitrate concentrations. Review of the lot locations and dimensions on the Draft Plan indicates that there is a minimum of 9 m between the road right-of-way and the 7 m setback line where wells can be located, or a minimum of 16 m between the road right-of-way and the higher nitrate line. Therefore, supply wells can be located on all proposed lots in compliance with the 7 m setback recommendation. The lot layout, line of higher nitrate concentrations, and the 7 m setback line can be found in **Figure 14**. Well locations in relation to the line of higher nitrate concentrations are provided in the FSR.

6.2.2 Salt-Related Impacts

The potential for groundwater impacts from an increase in chloride concentrations in groundwater resulting from road salting activities or the use of water softeners was reviewed.

TOWN OF CALEDON
PLANNING
RECEIVED
Jul 12, 2021

The Town of Caledon Official Plan outlines their classification of roadways based on the speed limit and average volume of daily traffic. Shaws Creek Road, which bounds the proposed development to the west, is classified as a Collector Road, under the jurisdiction of the Town of Caledon. The proposed subdivision roads would be classified as Local Roads and would be similarly under the jurisdiction of the Town of Caledon.

Based on the Town of Caledon's Salt Management Plan (2019), the Town defines five (5) levels of winter maintenance service based on the anticipated vehicle volume per day. At less than 500 vehicles per day, the Local Roads of the proposed subdivision will classify as Class 5. Under this Class 5 service, excess snow will be ploughed off the road and sand will be applied, where required to improve friction. Salt may be applied as part of Town maintenance service if the temperature is -12° Celsius and rising; however, increased chloride contaminant load due to road salt application is expected to be negligible.

The Town of Caledon's salting guidelines and weather data are included in **Appendix K**.

With respect to chloride inputs from water softeners, a recent study on chloride loading sources at a subwatershed level in the State of Minnesota (Overbo *et al.*, 2019), household salt contributions from domestic water softeners was identified to be approximately 11.4 kg (25 lbs) per household per month. Using this number, the total anticipated post-development water softener contribution to chloride load is given by the formula:

$$Cl = \frac{\left(25\ \frac{lbs}{household * month} * 75\ households * 12\ \frac{months}{year}\right) * \left(0.4536 \frac{kg}{lb}\right) * (0.6066\ g_{Cl}/g_{NaCl})}{\left(217{,}100 \frac{m^3}{year}\right)}$$

$$Cl = 0.0285\ kgCl/m3 = 28.5\ mg.L^{-1}$$

The Site is expected to see an increase in chloride concentration of 28.5 mg/L from residential water softeners.

The cumulative predicted chloride loading, with existing conditions included, is presented in **Table 6.66**, below:

Table 6.6 Maximum Calculated Chloride Concentration Post-Development

Well ID	ODWS Standard		RDL	Maximum Observed Concentration (mg/L)	Calculated Post-Development Water Softener Load (mg/L)	Cumulative Estimated Chloride Load (mg/L)
	OGODWS (mg/L)	CCME AG Aquatic Life (mg/L)				
PW2	250	120	0.20	22.9	28.5	**51.4**
OW1				3.48	28.5	**32.0**
TW1				14.3	28.5	**42.8**
TW2				18.8	28.5	**47.3**
TW3				3.41	28.5	**31.9**

TOWN OF CALEDON
PLANNING
RECEIVED
Jul 12, 2021

TW4				12.6	28.5	**41.1**
TW5				41.2	28.5	**69.7**
TW6				24.3	28.5	**52.8**
TW7				18.3	28.5	**46.8**
TW8				11.0	28.5	**39.5**
TW9				9.76	28.5	**38.3**
TW10				14.4	28.5	**42.9**
TW11				18.4	28.5	**46.9**
TW12				2.3	28.5	**30.8**

The resulting post-development chloride concentrations remain below both the guidelines for protection of aquatic life and the Ontario Drinking Water Standards.

6.2.3 Stormwater Management Ponds / Dry Wells

The introduction of stormwater management measures at the Site may increase the potential for groundwater impacts and subsequently the West Credit River. Currently, all dry wells are placed at the bottom of the proposed stormwater management ponds. As noted in COLE's 2020 FSR, enhanced (Level 1) quality control is required for the subject site, corresponding to an overall 80% TSS removal as defined by the MOE Stormwater Management Planning & Design Manual (2003) and applies to new development areas where hard surfaces, such as asphalt, are introduced that may generate sediment laden runoff. Also as described in the FSR, for all areas of the Site (except for the lots on the northern limit of the Site located on the opposite side of the natural drainage divide) including roads and road side ditches, quality treatment will be provided via a treatment train approach, comprising of infiltration within the grassed road-side ditches as well as proposed Oil / Grit separator units. The proposed Oil / Grit Separators will be located adjacent to or within the proposed SWM Pond Blocks at the downstream end of the ditch network. Storm runoff will be captured in the ditches by ditch inlet catch basins and will be piped through the Oil/Grit Separator units for treatment, prior to out-letting to the SWM Ponds. This approach should help mitigate potential groundwater contamination from surface spills. As a result, only "clean" water is anticipated to infiltrate through the stormwater management ponds.

6.3 Water Supply

6.3.1 Water Supply Analysis

As noted in **Section 2.3.1**, the main aquifer underlying the Site is the Amabel Formation, which provides water sufficient for several large municipal groundwater takings across the Upper Credit River Watershed. As described below, the aquifer is considered to be capable of providing sufficient water supply for the proposed development based on the analysis completed following the MECP (formerly the Ministry of Environment and Climate Change (MOECC)) Procedure D-5-5. An assessment of potential impacts from the water taking is provided in **Section 7.0**. These results are generally consistent with previous assessments of water supply at the Site (Terraprobe 1990).

Peak pumping rates expected per lot at the Site were determined based on the MECP Procedure D-5-5 with the assumption of a peak pumping rate of 3.75 L/min/person in a four-bedroom house (i.e., five

TOWN OF CALEDON
PLANNING
RECEIVED
Jul 12, 2021

people). This results in a peak pumping rate of 18.75 L/min/house. The estimated peak pumping rate is conservative as peak flow rates are only expected to last for only 120 minutes/day. In addition, private wells are typically pumped intermittently, putting less stress and demand on the aquifer. As a result, the expected long-term average pumping rate is estimated to be approximately 1.56 L/min/house (2,250 L/day/house) as outlined in the MOECC Procedure D-5-5.

To investigate the safe well yield on-site, R.J. Burnside conducted six (6) pumping tests between June 11, 2014 and August 29, 2014, which would be expected to generally reflect dry conditions when lower amounts of recharge would occur. The pumping tests lasted for approximately 6 hours with pumping rates ranging from 11.34 L/min to 96.6 L/min and recovery monitored until approximately 95% recovery, as required by the MOECC Procedure D-5-5. Although one of the six pumping tests had a pumping rate less than the maximum rate indicated by MOECC guidelines outlined in Procedure D-5-5, two (2) additional 26 hour pumping tests were conducted in March and April 2016 on TW6 and TW11 at a pumping rate of 60 L/min in compliance with Procedure D-5-5. Raw data for all pumping tests is provided in **Appendix L**.

Transmissivity was estimated from pumping test results using the modified non-equilibrium equation developed by Cooper and Jacob (1946) as outlined in Driscoll (1986) and shown below:

$$T = \frac{0.183Q}{\Delta s}$$

Where,

T	=	transmissivity (m^2/day)
Q	=	pumping rate (m^3/day)
Δs	=	slope of the time-drawdown graph expressed as a change in drawdown between two times on log scale whose ratio is 10 (one log cycle). Time-drawdown curves can be found in **Appendix C**.

Transmissivity was then used to estimate drawdown after 20 years and 50 years based on the Theis (1935) solution.

$$s = \frac{Q}{4\pi T} W(u)$$

Where,

s	=	drawdown (m)
Q	=	pumping rate (m^3/day)
T	=	transmissivity (m^2/day)

And $u = \frac{r^2 S}{4Tt}$, where r = distance from centre of pumping well to drawdown location (m), S is coefficient of storage (dimensionless), and t is time since pumping started (days)

If calculated drawdown after 20 and 50 years is less than the available drawdown within the pumping well, then the well is considered to have adequate water supply. The available drawdown is considered to be the distance from the static water level to the middle of the open borehole.

This methodology is generally accepted as the appropriate way to assess the sustainability of a proposed water supply. Additional techniques were also used to assess the sustainability of the proposed water supply, as described below.

6.3.1.1 Results

Resulting estimated transmissivity values and calculated 20 year and 50 year drawdowns for the six pumping tests, completed in 2014, are provided in **Table 6.7** and calculations are provided in **Appendix M**.

TOWN OF CALEDON
PLANNING
RECEIVED
Jul 12, 2021

Table 6.7 Pumping Test Results and Estimated Long Term Drawdown

Well ID	Estimated Transmissivity (m^2/day)	Available Drawdown (m)	Peak Pumping Rate (18.75 L/min/house)		Average Pumping Rate (1.56 L/min/house)
			Calculated Drawdown after 20 years (m)	Calculated Drawdown after 50 years (m)	Calculated Drawdown after 50 years (m)
TW1	9.40	23	3.5	3.8	0.32
TW2	14.9	2.2	2.3	2.4	0.20
TW3	84.9	14	0.40	0.50	0.040
TW4	403	7.1	0.10	0.10	0.010
TW5	26.6	7.5	1.3	1.4	0.12
TW6	72.1	8.2	0.50	0.60	0.050

Based on conservative available drawdown calculations, pumping tests results indicate that most wells can safely support 50 years of continuous pumping at the peak pumping rate of 18.75 L/min/house. This pumping rate exceeds the peak pumping rate likely to be realistically experienced by each well. This peak rate is only expected to occur for a total of 120 min/day and therefore results presented in **Table 6.7** represent a very conservative approximation of the drawdown that would occur after 20 and 50 years of pumping.

Based on the conservative calculations of available drawdown, TW2 was estimated to slightly exceed the available drawdown after 20 years and 50 years. This is not expected to be an issue as continuous pumping at the peak pumping rate is a significant over estimation of a likely pumping rate, which should be closer to 1.56 L/min/house of transient, not continuous, pumping. In addition, the available drawdown within TW2 represents a conservative estimate of the actual water available for drawdown. Given the expected long-term average pumping rate of 1.56 L/min/house, TW2 is only expected to experience 0.2 m of drawdown after 50 years of continuous pumping; significantly less than the available drawdown. Therefore, based on the comparison of predicted versus available drawdown in **Table 6.7**, the completed testing of the on-site test wells is considered to confirm adequate water supply per MOECC Procedure D-5-5. Notwithstanding this, TW2 is positioned within the proposed stormwater pond.

Other Methods of Analysis - % Percentage of Available Groundwater

The combined water takings expected at the Site, based on an average pumping rate of 2,250 L/day/house and 75 houses, is 168,750 L/day. This is only a portion of the expected daily infiltration recharge that will occur on the Site (519,784 L/day), as calculated from the pre-development water balance using 2010-2015 climate data (**Section 6.1, Appendix J**).

Groundwater flow into the Site (flow-through) from upgradient areas can be approximated using Darcy's equation:

$$Q = K * i * A$$

Where,

Q	Groundwater flux entering the Site (m^3/day)
K	Average hydraulic conductivity (m/s)
i	Average hydraulic gradient (m/m)
A	Cross-sectional area exposed to flow (m^2) = *b * w, and*

TOWN OF CALEDON
PLANNING
RECEIVED

Jul 12, 2021

b = Thickness of the aquifer (m)w

w= Width of the Site exposed to flow (m)

Using average Site values of $7.52x10^{-5}$ m/s for K, 0.013 m/m for *i,* 15.92 m for b and 1000 m for w, the daily groundwater flux entering the Site from upgradient can be approximated to be 1,344,930 L/day.

When considering both the expected infiltration across the Site (519,784 L/day) and the groundwater flow into the Site from upgradient (1,344,930 L/day), the total water takings at the Site represent approximately 9% of the total water entering the Site. It should be noted that much of groundwater taking will ultimately returned to the subsurface as treated effluent via septic systems.

Other Method of Analysis – Safe Yield

Safe yield or sustainable aquifer yield is a term used to describe the amount of water that can be withdrawn from an aquifer without producing an undesirable effect. Safe yield for the wells were calculated based on the results of the pumping test using the 20-year safe pumping rate equation developed by Farvolden (1959*)* as outlined below:

$$Q_{20} = \frac{4T(H_A/8)}{2.30} S_f$$

Where,

Q_{20}	=	20-year safe pumping rate for the well (m^3/day)
T	=	transmissivity (m^2/day)
S_f	=	Safety factor = 0.7 (no units)
H_A	=	Available head (m)

Safe yield was also calculated using the Maathuis and van de Kamp (2006) method as described below:

$$Q_{20} = \frac{S_f * H_A * Q}{s_{100min} + (s_{20yr} - s_{100min})_t}$$

Where,

Q_{20}	20-year safe pumping rate for the well (m^3/day)
Q	Pumping rate during the pumping test (m^3/day)
S_f	Safety factor = 0.7 (no units)
H_A	Available head (m)
s_{100min}	Drawdown observed in well during the pumping test at 100 minutes (m)
$(s_{20yr} - s_{100min})_t$	Theoretical drawdown after 20 years of pumping– theoretical drawdown after 100 minutes (m)

Theoretical drawdowns at 20 years and 100 minutes were calculated using the Theis (1935) solution. Available head was calculated as the static water level less the total depth of the well, based on an anticipated-low water level period (October) and an anticipated-high water level period (March).

A summary of the estimated safe yields using both methods is presented in **Table 6.8** below and the detailed calculations are presented in **Appendix M**:

TOWN OF CALEDON
PLANNING
RECEIVED
Jul 12, 2021

Table 6.8 Calculated Safe Yield (m^3/day)

Well ID	October 2017			March 2020		
	Available Drawdown (m)	Farvolden Method (m^3/day)	van der Kamp and Maathuis Method (m^3/day)	Available Drawdown (m)	Farvolden Method (m^3/day)	van der Kamp and Maathuis Method (m^3/day)
TW1	23	**103.4**	**89.9**	32.21	**144.8**	**125.8**
TW2	2.2	**15.7**	**14.6**	5.55	**39.5**	**36.9**
TW3	14	**568.3**	**236.3**	17.72	**719.3**	**299.0**
TW4	7.1	**1368.0**	**1022.4**	14.11	**2718.6**	**2031.8**
TW5	7.5	**95.4**	**70.7**	12.94	**164.6**	**121.9**
TW6	8.2	**283.1**	**93.6**	14.38	**496.4**	**164.2**

The calculated safe yields for test wells TW1 through TW6 suggest that during times of anticipated high-water levels, typically associated with winter melt and spring highs, the Site can adequately support the peak day pumping rate of 27 m^3/day (continuously for 20 years) at all tested locations.

The Site has been demonstrated to still be able to adequately support the peak day pumping rate (continuously for 20 years) at all but one tested location, TW2, based on the October 2017 data. At TW2, the peak pumping rate cannot be supported because of the insufficient available head (height of water above the pump) in this well. This is due to the relatively shallow depth of the well. TW2 was terminated within the dolostone aquifer at a depth of approximately 20.60 mbgs, while the remaining test wells extended well beyond 30 mbgs. Based on the equations for safe yields presented above, if TW2 were completed to 30 mbgs, the safe yield estimates for October 2017 would be 82.6 m^3/day and 77.1 m^3/day, respectively, which would be sufficiently adequate. Notwithstanding this, TW2 is located in the proposed stormwater pond Block 81 and the wells of nearest proposed lots (Lots 24 and 44) will not be impacted.

6.3.2 Summer Demand

Higher pumping rates occur during the summer months due to increased water demands from activities such as irrigation etc. Based on a water supply study completed for the Town of Carlisle for the years of 2004-2008 (Stantec 2010), summer maximum day flow rates ranged from 2.1 to 3.3 times the average daily flow rates. Using 3.3 as a safety factor to be conservative, the summer day flow rate per house was calculated to be 7,425 L/day (7.425 m^3/day), which is far less than the calculated safe yields across the Site, as outlined in **Table 6.8**. Based on this analysis, the underlying Amabel Formation aquifer has been demonstrated to be able to adequately support the higher summer rates at all locations.

Furthermore, cisterns can be installed at each house to offset the summer demand pumping as a precaution. There are a number of options available in terms of size, use, and water supply. This can be considered further in the builder's design guidelines. Other measures can be implemented to reduce the need for irrigation. For example, drought resistant grasses with clover can also be considered in the builder's design guidelines. The use of native plant species in gardens that are usually better adapted to the local climatic condition is another option that could be considered.

Swimming pools are typically filled in mid to late spring when groundwater levels are higher. As such, filling swimming pools is not expected to overlap with peak dry summer month takings. The calculated safe yields across the Site demonstrate the proposed aquifer's ability to safely accommodate peak scenarios.

TOWN OF CALEDON
PLANNING
RECEIVED
Jul 12, 2021

6.3.3 Radius of Influence

Based on the calculated 50-year drawdown expected within TW1 and observation well PW1 at a pumping rate of 18.75 L/min/house, the radius of influence (also referred to as zone of influence), beyond which no drawdown is expected to occur, was estimated. The radius of influence was estimated as per Driscoll (1986) using distance-drawdown plots to estimate the distance where zero drawdown would occur and found to be approximately 300 m, not considering recharge. However, given the more realistic pumping rate of 1.56 L/min/house, a radius of influence of approximately 100 m is calculated by this method, which does not consider the effect of recharge.

For comparison, TW4 was also used to estimate the radius of influence based on the drawdown expected after 50 years pumping at 1.56 L/min/house. Results from the analysis with TW4 also indicate a radius of influence of approximately 100 m at the Site. However, the results should be considered approximate as there are no observation wells within the radius of influence to confirm drawdown. The results of this analysis are provided in **Appendix N**. Results from the analysis of TW1 and TW4 were assumed to be representative of the expected radius of influence at the Site as they were calculated to have the largest and smallest transmissivity values (see **Table 6.7**) and therefore bracket the range of transmissivities expected at the Site.

The method described above and shown in **Appendix N** provides a conservative estimate of the radius of influence as it does not consider the influence of recharge on the calculations. Recharge on-site will significantly decrease the radius of influence since the drawdown cone is expected to expand until the recharge rate is equal to the pumping rate. Therefore, an approximate radius of influence can also be estimated from the interpreted recharge rates. Assuming a conservative recharge rate of 300 mm/year (or 8.22×10^{-4} m/day) and an average pumping rate of 1.56 L/min/house, the radius of influence would be approximately 30.0 m, resulting in an area of 2,827 m^2 (or 0.27 ha). Based on this analysis and an average lot size of approximately 0.4 ha, there is expected to be negligible supply interference between lots. Regardless of the calculated radius of influence, drawdown within the wells is estimated to be a maximum of 0.32 m after 50 years of continuous pumping at an average rate of 1.56 L/min/house (see **Table 6.7**). Therefore, drawdown within the radii of influence is expected to be very small.

Based on the FSR, wells on-site will be placed a minimum of 30 m apart. Since the radius of influence of is conservatively expected to be 30 m at most, if wells are placed 30 m apart minor superposition of drawdown may occur where the radii intersect. The maximum superposition of drawdown is expected to occur at the midpoint between wells (15 m). However, interference between supply wells spaced 30 m apart will be negligible. The maximum drawdown from one well at this intersection point was conservatively calculated to be 0.11 m (**Appendix L**), which is significantly less than the available drawdown (0.5% of the available drawdown at TW1). Locations of wells on-Site are provided in the COLE 2020 FSR.

6.3.4 Radius of Contribution

The radius of contribution is different than the radius of influence calculated above. The radius of influence discussed above outlines the distance at which there is nearly zero drawdown and therefore represents the drawdown cone of a supply well. In contrast, the radius of contribution is the area where groundwater and recharge are contributing to the supply well; this concept is similar to the delineation of a well head protection area (WHPA). This radius of contribution extends further upgradient than downgradient due to the effect of groundwater flow direction and gradient, unlike the radius of influence, which is typically more simplistically depicted as a uniform radius around the well.

The downgradient distance from the supply well to the edge of the radius of contribution is called the stagnation or null point and can be calculated using the following equation (Fileccia, 2015).

TOWN OF CALEDON
PLANNING
RECEIVED
Jul 12, 2021

$$x = \frac{Q}{2\pi T i}$$

Where x is the distance from the well to the stagnation point (m), *Q* is the pumping rate (m^3/day), *T* is the transmissivity (m^2/day), and *i* is the horizontal hydraulic gradient (dimensionless).

By estimating the downgradient area contributing water to the supply well (distance to the stagnation point), a minimum separation distance can be determined for placing supply wells at the Site an appropriate distance from the approximated line of higher nitrate concentrations (**Figure 14**).

Based on an average pumping rate of 1.56 L/min (2.25 m^3/day), the lowest transmissivity of 9.4 m^2/day across, and the lowest estimated minimum hydraulic gradient at the Site of 0.0055, the distance to the stagnation point can be calculated as below.

$$x = \frac{2.25}{2\pi(9.4)(0.0055)} = 6.9\ m$$

Based on this analysis, a separation distance of at least 7 m should be maintained between the supply well and the line of higher nitrate concentrations. It should be noted that this represents a conservative estimate, as the lowest values of transmissivity and horizontal gradient were used.

The use of average day pumping rate is considered appropriate as this is interpreted to generally represent a steady-state condition. However, peak pumping rates (27 m^3/day) under several scenarios were also considered for comparison; as follows:

- Using an average transmissivity of 101.9 m^2/day across the Site, and the lowest hydraulic gradient at the Site of 0.0055, the distance to the stagnation point was calculated to 4.23 m.
- Using an average transmissivity value from within the vicinity of the elevated nitrate concentrations (TW4, TW5, TW6) of 167.3 m^2/day, and a conservative hydraulic gradient of 0.01 m/m, observed across the western half of the Site, the distance to the stagnation point was calculated to be 2.6 m.
- Using the peak pumping rate of 27 m^3/day with the average transmissivity value of 101.9 m^2/day and average gradient of 0.01, the distance to the stagnation point was calculated to be 4.2 m.

The distance to the stagnation point for the worse-case scenario (peak pumping rates, lowest transmissivity, lowest gradient) was calculated to be 83.1 m. Since peak rate takings are only anticipated to occur for 120 minutes/day, it is unlikely that steady state conditions will be reached at these rates, and the resulting downgradient radius of contribution will be even less than the above calculated value.

As noted above, review of the lot locations and dimensions on the Draft Plan indicates that supply wells can be located on all proposed lots in compliance with this recommendation.

7 Receptors and Impacts

7.1 Surrounding Groundwater Users

Potential long-term impacts to surrounding groundwater users outlined in **Section 5.9** are usually related to changes in groundwater quality and quantity. As the nitrate loading concentration at the Site boundary is only expected to be 2.52 mg/L, which is less than the ODWS of 10 mg/L, negative impacts to groundwater quality for surrounding groundwater users are not anticipated.

Potential long-term impacts to surrounding groundwater users related to groundwater quantity are also expected to be minimal as the radius of influence of on-site water supply wells is not expected to be larger

TOWN OF CALEDON
PLANNING
RECEIVED
Jul 12, 2021

than 30 m (when recharge is considered), and total groundwater takings are small compared to the total input of groundwater and recharge at the Site. In addition, a large portion of the extracted groundwater will be reintroduced to the groundwater system via septic systems, further reducing impacts to surrounding groundwater users.

Based on the lot configurations shown in **Appendix A**, and the MECP well record locations shown on **Figure 15**, the closest neighbouring well is approximately 125 m from the closest potential on-site supply well (**Table 7.1**). As this is considerably larger than the estimated conservative radius of influence of 30 m, when recharge is considered, no significant impacts to water quantity at neighbouring wells are anticipated. In addition, residential wells in Belfountain are commonly completed in a mix of the rock formation underlying the Amabel Formation. These include the dolostone / sandstone units associated with the Manitoulin and Whirlpool Formations, which underlie the Amabel Formation, Cabot Head Formation shales and Queenston Formation shales. Since on-site supply wells will be screened in the Amabel Formation, interference between on-site wells and water supply wells in Belfountain are further reduced since these wells are not interpreted to obtain water from the same aquifer.

Table 7.1 Distance from Receptors to Closest on-site Supply Well

Receptor	Approximate Minimum Distance to Potential on-site Supply Well (m)	Radius of Influence of Supply Well (m)	Approximate Separation Between Radius of Influence and Receptor (m)
Surrounding Groundwater Users	125 (lot 48)	30	95
On-Site Wetland Features	200 (lot 52)	30	170
Off-Site Wetland Features	250 (lot 27)	30	220
West Credit River	500 (lot 27)	30	470

7.2 Natural Features

7.2.1 On-Site Wetland Features

Potential long-term impacts to wetland features are usually related to changes in groundwater contributions to the feature and groundwater quality. As existing groundwater contributions to on-site wetland features (SWT3-2 and MAS3-1) are considered negligible, no long-term impacts to these features are expected. Similarly, as groundwater contributions to these on-site features are considered negligible, no negative impacts are expected from groundwater quality changes, and groundwater nitrate loadings at the on-site wetland features are expected to be lower than the CCME / CVC guideline for NO_3-as-N of 3 mg/L.

In addition, based on radius of influence analysis and the lot layout shown in **Appendix A**, the closest potential on-site supply well is approximately 200 m from the on-site wetland features (**Table 7.1**). As this is considerably larger than the estimated radius of influence, no impacts to water quantity is anticipated.

7.2.2 Off-Site Wetland Features

Potential long-term impacts to off-Site wetland features will also be related to groundwater contributions and groundwater quality. Although, groundwater contributions to off-Site wetland features (SWM1-1 and MAM3-1) are expected, negative impacts are not anticipated as it is understood that infiltration measures will be utilized to maintain that pre-development infiltration on-site will be maintained post-development.

TOWN OF CALEDON
PLANNING
RECEIVED
Jul 12, 2021

Groundwater takings from on-site water supply wells are also not expected to have an impact on off-Site wetland features as total groundwater takings are small compared to the total input of groundwater and recharge at the Site. In addition, a large portion of the extracted groundwater will be reintroduced to the groundwater system through tertiary treated septic systems, further reducing impacts to natural features.

Similarly, on-site water supply wells are not expected to directly impact off-Site wetland features as the shortest distance between the closest potential on-site supply well and the off-Site wetland features is approximately 250 m, which is greater than the radius of influence of approximately 30 m, when recharge is considered (**Table 7.1**). Please refer to **Appendix A** for lot locations.

In addition, supply wells primarily obtain water in the upgradient direction whereas the off-Site wetland features are downgradient of the Site. Based on radius of contribution calculations (**Section 6.3.4**), water supply wells on-site are interpreted to draw in groundwater from approximately 7 m in the downgradient direction. This is significantly less than the distance between the closest potential on-site supply well and the off-Site wetland features. As a result, impacts to groundwater contributions to off-Site wetland features are expected to be minimal.

Potential long-term impacts to off-Site natural features from changes in groundwater quality are also expected to be negligible as groundwater nitrate loadings at the property boundary are expected to be lower than the CCME / CVC guideline for NO_3-as-N of 3 mg/L.

7.2.3 Feature-Based Water Balance

Based on the potential long-term impacts to on- and off-Site wetland features discussed in **Section 7.2.1** and **Section 7.2.2** above, a feature based water balance is not recommended.

A feature-based water balance is not recommended for the on-site wetland features (SWT3-2 and MAS3-1) as these features receive negligible groundwater contributions; furthermore, groundwater recharge on-site will be maintained to minimize negative impacts. In addition, based on long-term pumping at the average annual pumping rate, the radius of influence from supply wells are not estimated to reach these features and will not impact the on-site wetlands.

A feature-based water balance is not recommended for the off-Site wetland features (SWM1-1 and MAM3-1) as groundwater recharge on-site will be maintained with infiltration measures to sustain groundwater contributions to these wetlands. These features will also not be impacted by groundwater takings from on-site supply wells as they are outside the predicted radius of influence. In addition, nitrate loadings at the Site boundary are below the CCME / CVC guideline and not expected to impact off-Site wetlands. Finally, as outlined in the Functional Service Report (FSR), essentially all runoff from the Site up to the 100 year storm event back to back will be contained to the Site, which is consistent with existing Site conditions, and therefore no change in hydrological conditions at off-Site wetland features from the development is anticipated.

7.2.4 Water Courses

Potential long-term impacts to the West Credit River will be related to groundwater contributions and groundwater quality. As infiltration is expected to be maintained post-development, the West Credit River is outside the radius of influence (approximate minimum distance to potential on-site supply well is 470 m), and total groundwater takings on-site are small and only 0.6% of the West Credit River baseflow, no changes to groundwater contributions to the West Credit River are anticipated. Similarly, long-term impacts to the West Credit River from changes in groundwater quality are expected to be minimal as groundwater nitrate loadings at the property boundary are expected to be lower than the CCME / CVC guideline for NO_3-as-N of 3 mg/L. As discussed in **Section 6.2.2**, there should be negligible increased chloride input to the West Credit River as a result of minor road salting and the use of water softeners at

TOWN OF CALEDON
PLANNING
RECEIVED
Jul 12, 2021

the Site Chloride water quality is expected to remain well below the ODWS aesthetic guidelines as well as the CCME and MECP guidelines for the protection of aquatic life.

7.2.5 Karst Features

Karst features have not been identified at the Site; however, the OGS has indicated that there is the potential for karst features in the local area. Potential long-term impacts to karst features will be related to a reduction of recharge to these features or changes to water quality. As infiltration is expected to be maintained post-development, total groundwater takings on-site are small, and site grading requirements are expected to be kept to a minimum, negative impacts to the function of any karst features that may be present are expected to be negligible. In addition, long-term impacts to karst features from changes in groundwater quality are expected to be minimal as the nitrate loading analysis demonstrates that nitrate loading from the septic systems would be small, and long-term nitrate concentrations at the Site are expected to decrease due the overall decrease in on-site agricultural activity.

7.2.6 Cumulative Impacts

A concern has been raised by the Niagara Escarpment Commission (NEC) about potential cumulative impacts from the proposed development with proposed expansion of the James Dick Erin sand and gravel pit to the north and the Erin Sewage treatment plant that is proposed to outlet into the West Credit River upstream of the Site.

In Ontario, each development is typically reviewed to ensure that off-site impacts will not occur and, as such, if there are no off-site impacts associated with individual Sites, there should be no cumulative impacts. Regardless, COLE reviewed both the two proposed land uses referenced above to assess potential cumulative impacts, as follows:

- The proposed James Dick application is for a license to permit the extraction of aggregate from above and below the water table. The proposed pit is located approximately 400 m north of the West Credit River along Winston Churchill Boulevard and is over 1.5 km west northwest of the Site. The West Credit River represents a groundwater divide between the two sites. The Harden (2016) report for that application concluded there many minor adjustments to the water table around the pit and the radius of influence was estimated to be 150 m and would not therefore intersect the West Credit River. The calculated radius of influence for the Site wells of 30 m will not intersect James Dick's radius of influence. Based on the conclusions presented in the Harden report along with the separation distance between the two sites, no cumulative impact is anticipated.
- The proposed Erin Sewage Treatment plant is located > 1 km west of the Site and treated effluent from that plant will discharge directly to the West Credit River. An assimilative capacity study was completed (see Ainley 2019 report), which indicated that the Total Phosphorous (a limiting parameter) was fully mixed to below PWQO concentrations within 150 m of the proposed plant. As such, no cumulative impacts are anticipated.

8 Summary

A summary of the hydrogeological investigation is provided below:

- The Site is located within West Credit River Subwatershed and is primarily within the Horseshoe Moraine physiographic region;
- Investigations at the Site have been completed by Terraprobe, Beatty, R.J. Burnside, Winter Associates, and COLE;

TOWN OF CALEDON
PLANNING
RECEIVED

Jul 12, 2021

- Based on borehole logs and regional stratigraphy, the Site is generally underlain by Wentworth Till, glaciofluvial sediments, and Port Stanley Till. Bedrock units under the Site are the Amabel Formation dolostone, Cabot Head Formation shale, Manitoulin Formation dolostone, Whirlpool Formation sandstone, and Queenston Formation shale;
- Hydraulic conductivity estimates of the dolostone bedrock aquifer range from $4.7x10^{-6}$ m/s to $2.9x10^{-4}$ m/s with an average of $3.6x10^{-5}$ m/s. Infiltration rates of the overburden range from 420 mm/hr to 29 mm/hr with an average of approximately 152 mm/hr. Supplementary infiltration testing completed in 2019 show an average infiltration rate of 100 mm/hr in the shallow overburden;
- Groundwater levels across the Site are typically 10 to 20 mbgs with the exception of shallower groundwater at the on-site wetland features (SWT3-2 and MAS3-1) where it is typically 0 to 1 mbgs. In general, groundwater flow is primarily horizontal from southeast to northwest across the Site towards the West Credit River;
- There were no detectable concentrations of pesticides and herbicides in groundwater quality samples collected from four (4) test wells located within the agricultural areas. This suggests that historical on-site and neighboring agricultural activities have not negatively impacted groundwater quality at the Site.
- Groundwater quality analysis was conducted at twelve (12) on-site wells and results identified total coliform bacteria in five (5) of the twelve (12) test wells. None of the twelve (12) groundwater samples analyzed for E. Coli detected the presence of fecal contamination at the Site, which is considered to be a more reliable indicator of contamination.
- Nitrate concentrations in groundwater quality samples collected in 2020 from the twelve (12) test wells were similar to historical results. Nitrate concentrations are below ODWS and generally increase from south to north across the Site. On-Site nitrate concentrations are attributed to on-site and nearby agricultural activities;
- General groundwater quality on-site was found to have exceedances in total hardness and occasionally exceedances in turbidity with some occurrences of exceedances of aesthetic parameters such as total dissolved solids, sulphate, and iron. Water treatment systems are recommended to manage hard water and aesthetic water quality parameters;
- The on-site drainage feature RB1 that drains from the Paris Moraine to the south onto the Site is interpreted to be an ephemeral feature that infiltrates after precipitation, snowmelt and freshet events. This feature has been referred to as a “disappearing stream” or “underground stream” potentially associated with karst by MNRF staff; however, the relatively thick overburden at the Site reduces the possibility of this feature being a result of local karst features. The loss of flow in this feature is interpreted to be the result of a losing reach once the stream crosses onto the highly permeable outwash deposits from the lower permeability Wentworth Till units to the south;
- Groundwater contributions to on-site wetland features (SWT3-2 / MAS3-1) are estimated to be negligible. Qualitative investigations indicate that groundwater contributions to off-Site wetland features (SWM1-1 / MAM3-1) appear to be present;
- Water balance analysis indicates significant amounts of infiltration on the Site, which results from closed depressions within the hummocky topography and sandy overburden materials. Pre-development infiltration rates will be maintained post-development with no water leaving the Site up to back-to-back 100-year storm events;
- Nitrate loading analysis was completed in compliance with MECP Procedure D-5-4. Nitrate loading from the 75 on-site septic systems is expected to be 2.52 mg/L at the property boundary,

TOWN OF CALEDON
PLANNING
RECEIVED
Jul 12, 2021

which is less than the CCME / CVC guideline for NO_3-as-N of 3 mg/L. This is provided that tertiary (Level IV) treatment systems such as the Waterloo Biofilter System Inc. standard the system that is able to reduce total nitrogen by 50-65% are installed at each house, which we understand will be enforced through subdivision agreement;

- CCME / CVC guideline for nitrate loading is met at all downgradient natural features that may receive even minimal groundwater discharge, provided tertiary (Level IV) treatment systems are installed at each house;
- Water quality results for the Site indicate nitrate concentrations meet the ODWS; however, it is noted that nitrate concentrations are generally higher in the northern portion of the Site. Although the reduction in agricultural activity with the development of the Site is expected to lead to long-term reductions in nitrate concentrations, it is recommended that future supply wells be located in areas where existing nitrate concentrations are less than 7 mg/L. Therefore, no supply wells will be located north of the line of higher nitrate concentrations, with a setback of at least 7 m of this line, as determined by a radius of contribution analysis. Review of the lot locations and dimensions on the Draft Plan indicates that supply wells can be located on all proposed lots in compliance with this recommendation as there is a minimum of 9 m between the road right-of-way and the 7 m setback line where wells can be located;
- A peak pumping rate of 18.75 L/min/house and average pumping rates of 1.56 L/min/house are expected, based on MECP procedure D-5-5;
- Completed pumping tests, by R.J. Burnside, adequately demonstrate compliance with MECP Procedure D-5-5. Long-term drawdown over 50 years at the average pumping rate is much less than available drawdown at all wells analyzed;
- The proposed water taking was reviewed as a percentage of total groundwater either flowing through or infiltrating onto the Site and found to represent approximately 9% of the total groundwater on-site based on the average pumping rates. This does not account for the volume of water that would be returned to the groundwater system via treated septic effluent;
- The proposed water taking was also reviewed using two “safe yield” analytical techniques that showed that the Site wells that were installed to sufficient depth within the Amabel Formation could theoretically continuous pumping at the peak pumping rates for 20 years;
- Higher summer demand pumping rates were reviewed using data provided from a water supply study completed for the Town of Carlisle (Stantec 2010). In that study, summer maximum day flow rates ranged from 2.1 to 3.3 times the average daily flow ratees. Using 3.3 as a safety factor to be conservative for the Site, the summer day flow rate per house was calculated to be 7.425 m^3/day, which is far less than the calculated safe yields across the Site. Based on this analysis, the underlying Amabel Formation aquifer has been demonstrated to be able to adequately support the higher summer rates at all locations. However, the use of cisterns and drought resistant grasses could be reviewed in the design guidelines for the Site to reduce potential summer demand pumping;
- The radius of influence of each well, based on average pumping rate, is expected to be approximately 100 m. However, this radius does not consider the influence of recharge. Therefore, the radius of influence of each well, based on average pumping rate and recharge analysis, is expected to be approximately 30 m, or a 0.27 ha area, which is less than the expected average lot size. Therefore, minimal supply interference is expected between private wells;
- Supply wells on-site will be placed a minimum of 30 m apart. Since the radius of influence of each well is expected to be 30 m, if wells are placed 30 m apart minor superposition of drawdown may occur where the radii intersect. The maximum superposition of drawdown is expected to occur at

TOWN OF CALEDON
PLANNING
RECEIVED
Jul 12, 2021

the midpoint between wells (15 m). However, interference between supply wells spaced 30 m apart will be negligible;

- Negligible impacts are anticipated as a result in an increase in chloride at the Site. The proposed subdivision roads will classify as Class 5, according to the Town of Caledon's 2019 Salt Management Plan, and, as such, road salt will only be applied when temperature rises from -12° Celsius. A small amount of road salt may be applied by the residents; however, increased chloride contaminant load due to road salt application is expected to be negligible. The Site is expected to see a small increase in chloride concentration of 28.5 mg/L from residential water softeners; however, the resultant chloride concentrations in groundwater will remain below the ODWS or PWQOs. Overall, negligible long-term impacts are expected to surrounding groundwater users and natural features;
- Feature based water balances for on-site and off-Site wetlands are not recommended, as groundwater and surface water contributions, if any, to natural features will be maintained; and,
- Cumulative impacts are not anticipated with either the James Dick sand and gravel pit expansion license application or the proposed Erin Sewage Treatment plant.

9 Recommendations

Based on the presented hydrogeological investigations, the following recommendations for the development and future work are provided:

- The development can be supported by private wells based on an assessment of groundwater quality and quantity at the Site consistent with MECP Procedure D-5-4 and D-5-5;
- The Site has appropriate subsurface conditions to support subsurface wastewater disposal, and wastewater servicing can be provided by private septic systems at each lot provided that tertiary (level IV) treatment systems such as the Waterloo Biofilter System Inc. standard system or equivalent are installed;
- Based on nitrate concentrations, nitrate loading calculations, and radius of contribution calculations, supply wells within the Site should not be placed north of the line of higher nitrate concentrations, or within 7 m of this line to the south. Review of the lot locations and dimensions on the Draft Plan indicates that supply wells can be located on all proposed lots in compliance with this recommendation;
- The Site stormwater management plan should include two (2) stormwater management ponds to promote infiltration and maintain the Site water balance to pre-development levels and promote long-term groundwater quality at the Site;
- Cisterns could be installed at each house to offset the summer demand pumping. Other measures could also be implemented to reduce the need for irrigation, such as drought resistant grasses. Appropriate recommendations for drought resistant grasses and other plantings should be provided by an experienced professional;
- Restrict use of groundwater for swimming pool use and irrigation during summer; and
- A homeowner manual providing water conservation educational material and low impact landscaping alternatives.

TOWN OF CALEDON
PLANNING
RECEIVED
Jul 12, 2021

10 References

Ainley, 2019. Town of Erin, Urban Centre Wastewater Servicing Class Environmental Assessment Environmental Study Report.

Aqua Resources Inc. 2009. Integrated Water Budget Report – Tier 2: Credit Valley Source Protection Area. Credit Valley Conservation Authority

Atherholt, Thomas B. and Procopio, Nicholas A. 2017. Domestic Well Coliform Test Results. Water Well Journal.

Burt, A.K., 2017. Three-dimensional hydrostratigraphy of the Orangeville Moraine area, southwestern Ontario, Canada. Can. J. Earth Sci. 55: 802–828 (2018)

Brunton, F.R. and Dodge, J.E.P. 2008. Karst map of Southern Ontario, including Manitoulin Island: Ontario Geological Survey, groundwater Resource Study 5.

Chapman, L.J. and Putnam, D.F. 1984. The Physiography of Southern Ontario, 3rd Edition. Ontario Geologic Survey, Special Volume 2, 270 p.

COLE, 2020. Residential Development Functional Servicing Report. Report prepared for Manors of Belfountain Corp.

Cowan, W.R. 1976. Quaternary Geology of the Orangeville Area Southern Ontario. Ontario Division of Mines, Report 141, 98 p.

CTC Source Protection Region 2015. Approved Updated Assessment: Assessing Vulnerability of Drinking Water Sources. Credit Valley Source Protection Area.

CVC (Credit Valley Conservation) 1998. West Credit Subwatershed Study: Characterization Report. County of Wellington

CVC 2011. Erin Servicing and Settlement Master Plan, 2011: Environmental Component – Existing Conditions Report.

Davies, S. and Holysh, S. 2007. Groundwater Resources Study of the Credit River Watershed. Ontario Geological Survey

Driscoll, F.G. 1986. Groundwater and Wells: Second Edition. Johnson Filtration Systems Inc. St. Paul, Minnesota. 1089 p. Feliccia, A. 2015. Some simple procedures for the calculation of the influence radius and well head protection areas (theoretical approach and a field case for a water table aquifer in an alluvial plain). Italian Journal of Groundwater. AS14065:7-23.

Farvolden, R.N., 1959. Groundwater supply in Alberta. Alberta Research Council

Feleccia, A., 2015. Some simple procedures for the calculation of the influence radius and well head protection areas (theoretical approach and a field case for a water table aquifer in an alluvial plain). DOI 10.7343/AS-117-15-0144

Gauley and Associates Ltd. 2016. Analysis of Water Demand and Consumption by Section, City of Guelph.

Harden Environmental Services Ltd. 2016. Hydrogeologic Impact Assessment. Lots 11-13, Concession 6 West Side, Town of Caledon, Regional Municipality of Peel.

Hatch Mott Macdonald 2015. Groundwater Exploration Program. Alton Water Supply. Regional Municipality of Peel.

TOWN OF CALEDON
PLANNING
RECEIVED
Jul 12, 2021

Massman, Joel. 2004. An Approach for Estimating Infiltration Rates for Stormwater Infiltration Dry Wells. Washington State Department of Transportation.

Maathuis, H., van der Kamp, G., 2006. The Q20 Concept - Sustainable Well Yield and Sustainable Aquifer Yield , SRC Pub. No. 10417-4E06.pdf

McDougall, S. 2017. Summary Report. Town of Erin. Erin Well Supply Drinking-Water System No. 220000013.

McDougall, S. 2017. Summary Report. Town of Erin. Hillsburgh Well Supply Drinking-Water System No. 220007285.

MOECC 1996. Procedure D-5-4 Technical Guideline for Individual On-Site Sewage Systems: Water Quality Impact Risk Assessment. 20 p.

MOECC 1996. Procedure D-5-5 Private Wells: Water Supply Assessment. https://www.ontario.ca/page/d-5-5-private-wells-water-supply-assessment

Singer, S.N., Cheng, C.K., and Scafe, M.G., (2003). The Hydrogeology of Southern Ontario, Second Edition,. Ministry f the Environment

MOE, 2003. Stormwater Management Planning and Design Manual.

MOE, 2006. Assessment Report: Guidance Module 3. Groundwater Vulnerability Analysis, December 2006.

Novakowski, K., Beatty, B., Conboy, M.J., Lebedin, J., 2006. Water Well Sustainability in Ontario, Expert Panel Report. Prepared for the Ontario Ministry of the Environment, Sustainable Water Well Initiative, Final Report.

Overbo, A., Heger, S., Kyser, S., Asleson, B., and Gulliver, J., 2019. Chloride Contributions from Water Softeners and Other Domestic, Commercial, Industrial, and Agricultural Sources to Minnesota Waters. University of Minnesota Water Resources Center.

Procopio, N.A., Atherholt, T.B., Goodrow, S.M., and Lester, L.A., 2017. The Likelihood of Coliform Bacteria in NJ Domestic Wells Based on Precipitation and Other Factors., Ground Water, Sep;55(5): 722-735.

Regional Municipality of Peel 2015. Alton/Caledon Village Additional Water Supply. Municipal Class Environmental Assessment. Phase 1 and 2 Report. Regional Municipality of Peel.

Savanta 2018. Scoped Environmental Impact Study. The Manors of Belfountain, Belfountain, Ontario.

Stantec Consulting Ltd 2010. Carlisle Water Supply Study, Hamilton, ON.

Town of Caledon 2019. Salt Management Plan 2019 Update. Staff Report 2019-0206, update to Schedule A to 2016 Staff Report 2016-129.

Terraprobe Limited 1990. Hydrogeological Investigation Proposed Residential Subdivision Part Lot 9 Concession 5 WHS Town of Caledon (Belfountain) Region of Peel.

Thornthwaite, C.W., and Mather, J.R., 1957. Instructions and tables for computing potential evapotranspiration and the water balance: Centerton, N.J., Laboratory of Climatology, Publications in Climatology, v. 8, no. 1, p. 185-311.

Town of Orangeville 2017. Summary Report 2016. Orangeville Drinking Water System. Town of Orangeville.

TOWN OF CALEDON
PLANNING
RECEIVED

Jul 12, 2021

Town of Orangeville 2017. Summary Report 2016. Cardinal Woods Drinking Water System. Town of Mono.

USEPA 1987. Guidelines for delineation of wellhead protection areas. 212 p.

Winter Associates, 1989. Storm Water Management Study for Enterac Property Corporation Estate Residential Development, Part Lots 6,7,8 and 9, Concession 5 W.H.S Town of Caledone.

TOWN OF CALEDON
PLANNING
RECEIVED

Jul 12, 2021

Figures

TOWN OF CALEDON
PLANNING
RECEIVED
Jul 13, 2021

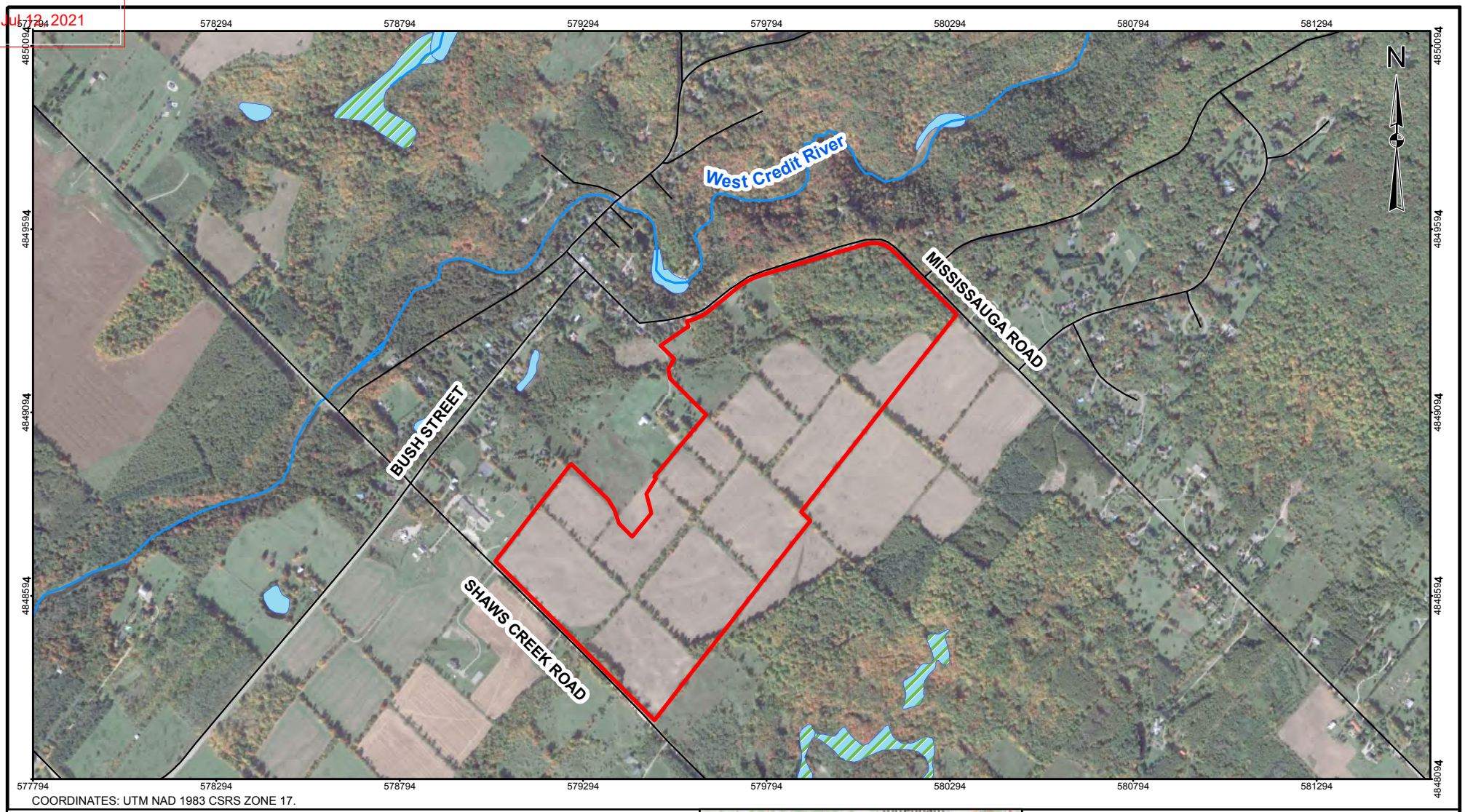

COORDINATES: UTM NAD 1983 CSRS ZONE 17.

LEGEND

- Site Boundary
- Roads
- Watercourses
- Waterbody
- Wetlands

REFERENCE

Service Layer Credits: © OpenStreetMap (and) contributors, CC-BY-SA

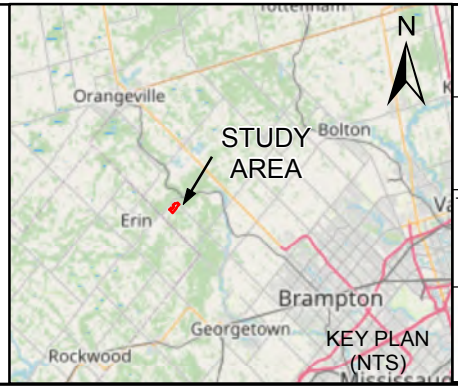

SCALE 1:15,000

150 0 150 300 450 600 Meters

PROJECT

Hydrogeological Investigation
Manors of Belfountain
Caledon, ON

TITLE

Site Location

		03/19/2020	2017-0646
GIS	B.T.	03/19/2020	REV. 2.0
DESIGN			
CHECK	S.D.	03/19/2020	FIGURE 1

TOWN OF CALEDON
PLANNING
RECEIVED
Jul 13, 2021

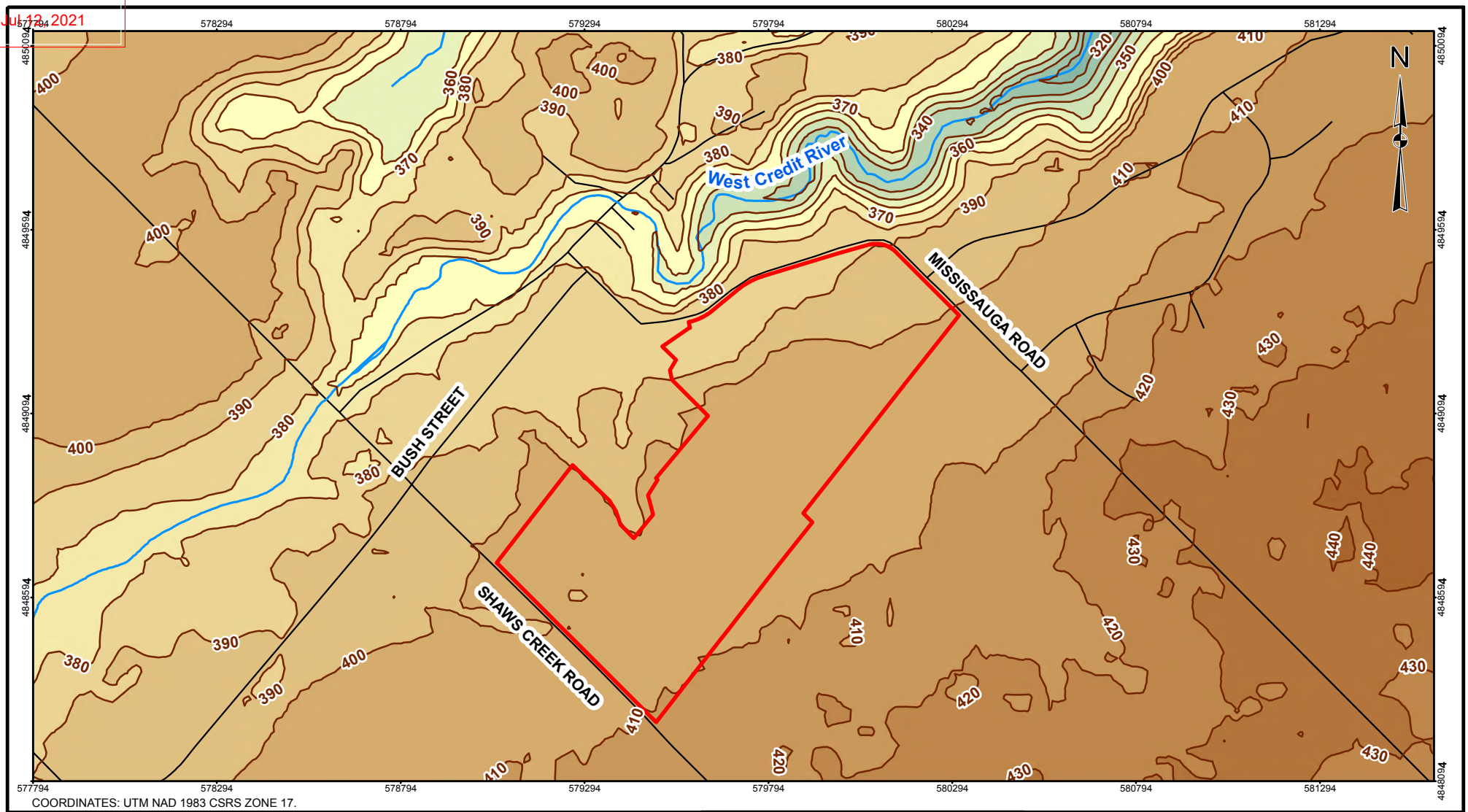

COORDINATES: UTM NAD 1983 CSRS ZONE 17.

LEGEND

- Watercourses
- Roads
- 10m Elevation Contours
- Site Boundary

Groundsurface Elevation (masl)

450, 440, 430, 420, 410, 400, 390, 380, 370, 360, 350, 340, 330, 320

REFERENCE

Service Layer Credits: © OpenStreetMap (and) contributors, CC-BY-SA

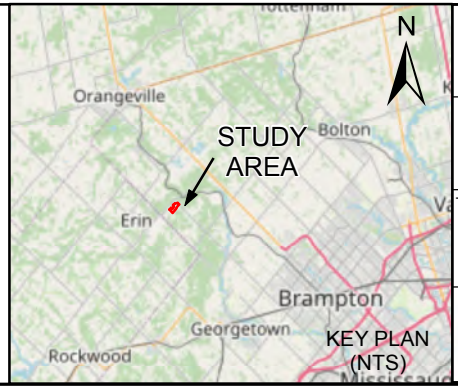

SCALE 1:15,000

150 0 150 300 450 600 Meters

PROJECT

Hydrogeological Investigation
Manors of Belfountain
Caledon, ON

TITLE

Regional Topography

		03/18/2020	2017-0646
GIS	B.T.	03/18/2020	REV. 1.0
DESIGN			
CHECK	S.D.	03/18/2020	FIGURE 2

TOWN OF CALEDON
PLANNING
RECEIVED
Jul 13, 2021

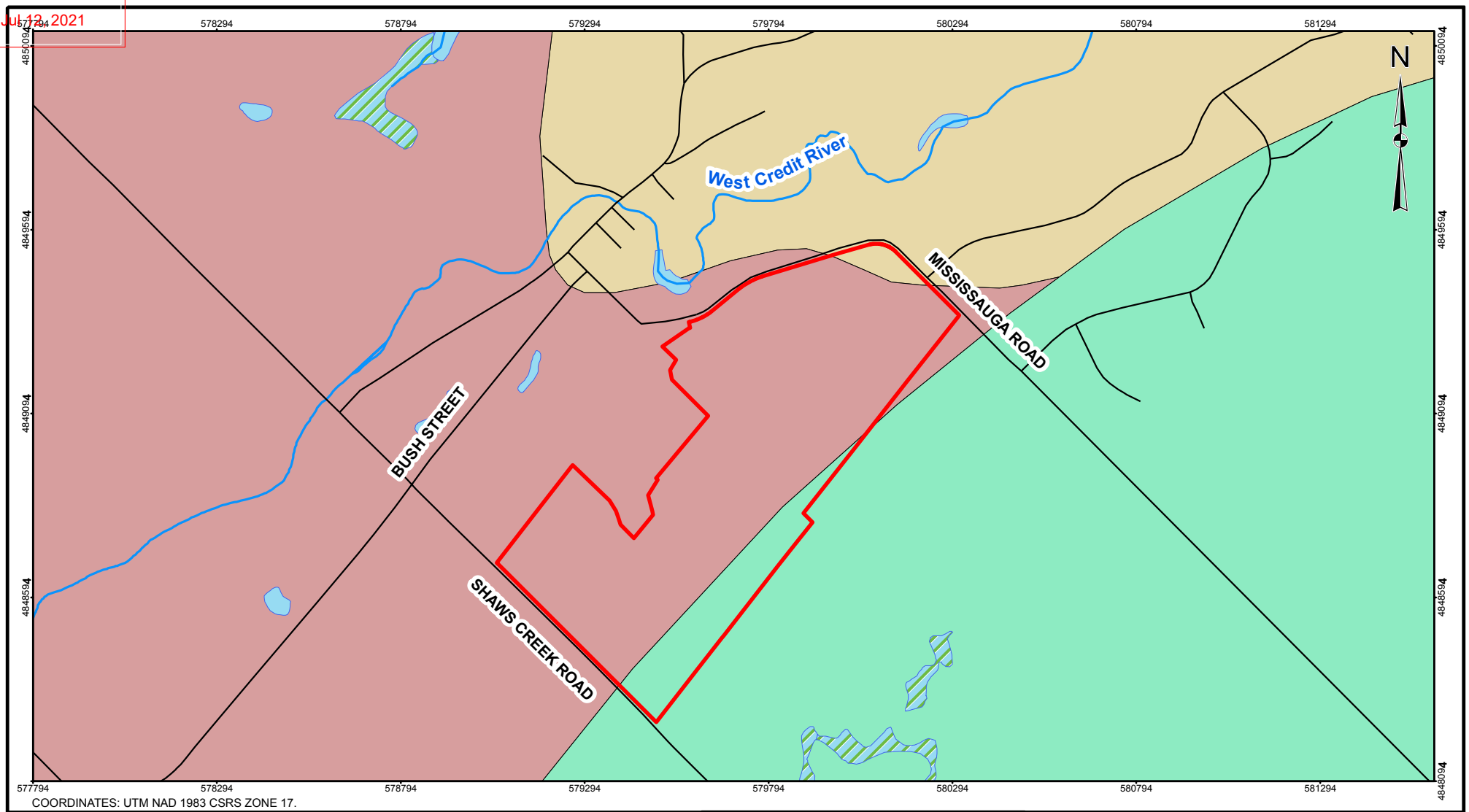

COORDINATES: UTM NAD 1983 CSRS ZONE 17.

LEGEND

- Site Boundary
- Roads
- Watercourses
- Waterbody
- Wetlands

Physiography Region

- Guelph Drumlin Field
- Horseshoe Moraines
- Niagara Escarpment

REFERENCE

Service Layer Credits: © OpenStreetMap (and) contributors, CC-BY-SA

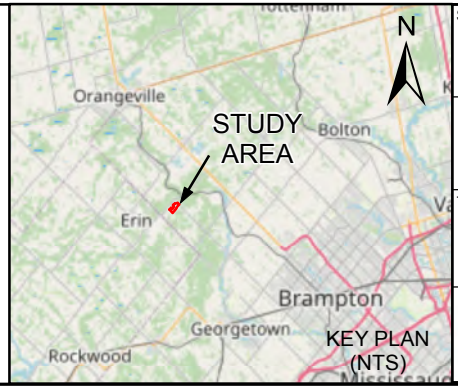

SCALE 1:15,000

150 0 150 300 450 600 Meters

PROJECT

Hydrogeological Investigation
Manors of Belfountain
Caledon, ON

TITLE

Physiography

		03/19/2020	2017-0646
GIS	B.T.	03/19/2020	REV. 2.0
DESIGN			
CHECK	S.D.	03/19/2020	FIGURE 3

TOWN OF CALEDON
PLANNING
RECEIVED
Jul 13, 2021

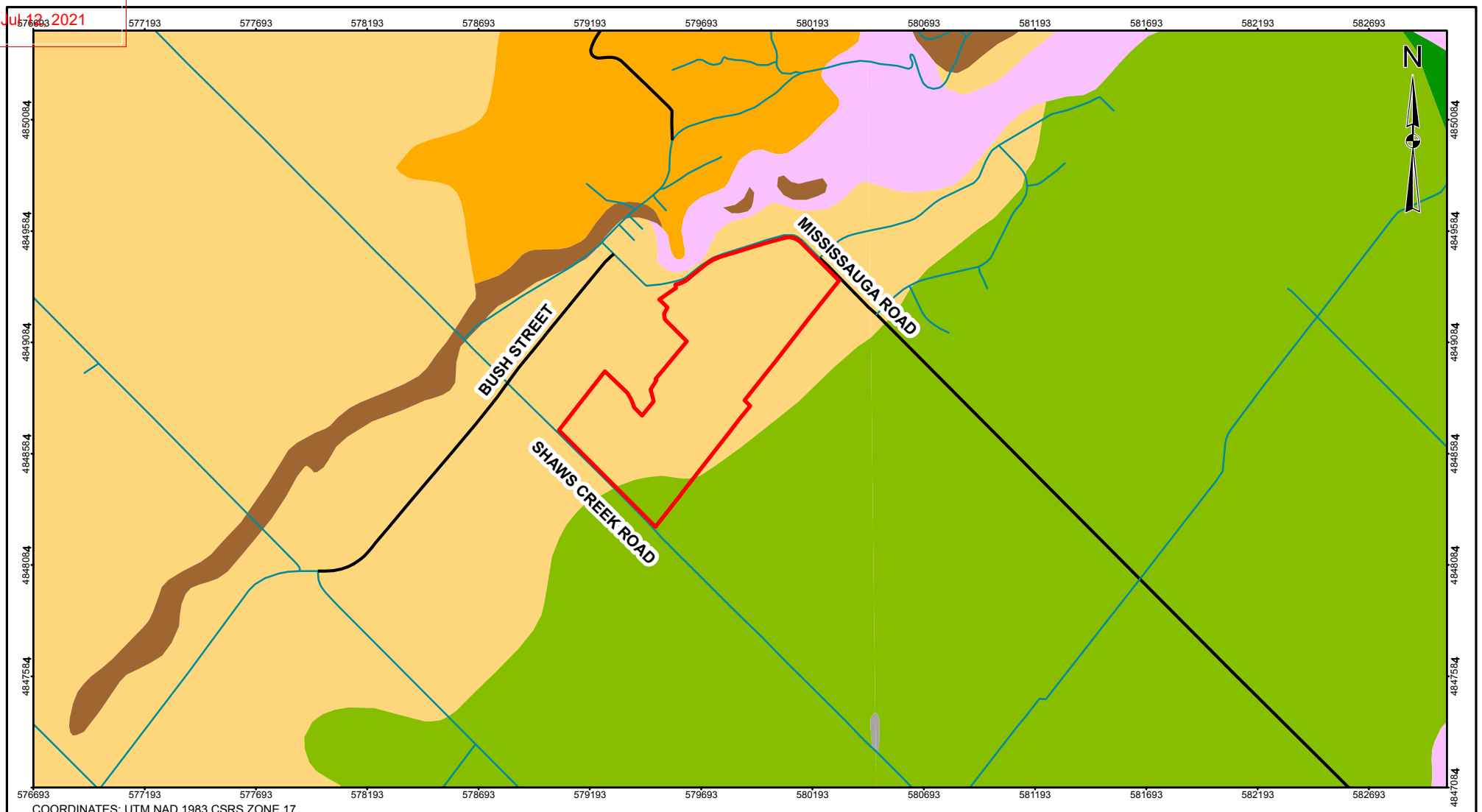

COORDINATES: UTM NAD 1983 CSRS ZONE 17.

LEGEND

- Site Boundary
- 3: Paleozoic bedrock
- 4: Paleozoic bedrock-drift complex
- 5b: Stone-poor, carbonate-derived silty to sandy till
- 5d: Glaciolacustrine-derived silty to clayey till
- 6: Ice-contact stratified deposits
- 7: Glaciofluvial deposits
- 19: Modern alluvial deposits
- 20: Organic deposits

REFERENCE

Service Layer Credits: © OpenStreetMap (and) contributors, CC-BY-SA

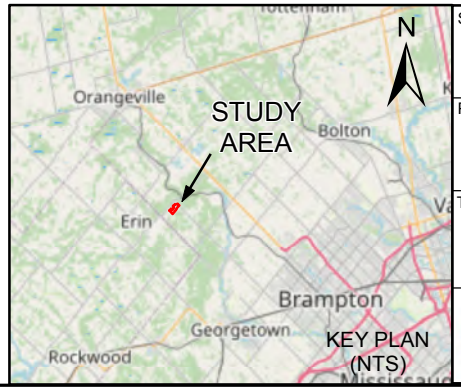

SCALE 1:25,000

250 0 250 500 750 1,000 Meters

PROJECT

Hydrogeological Investigation
Manors of Belfountain
Caledon, ON

TITLE

Overburden Geology

		03/19/2020	2017-0646
GIS	B.T.	03/19/2020	REV. 2.0
DESIGN			
CHECK	S.D.	03/19/2020	FIGURE 4

TOWN OF CALEDON
PLANNING
RECEIVED
Jul 13, 2021

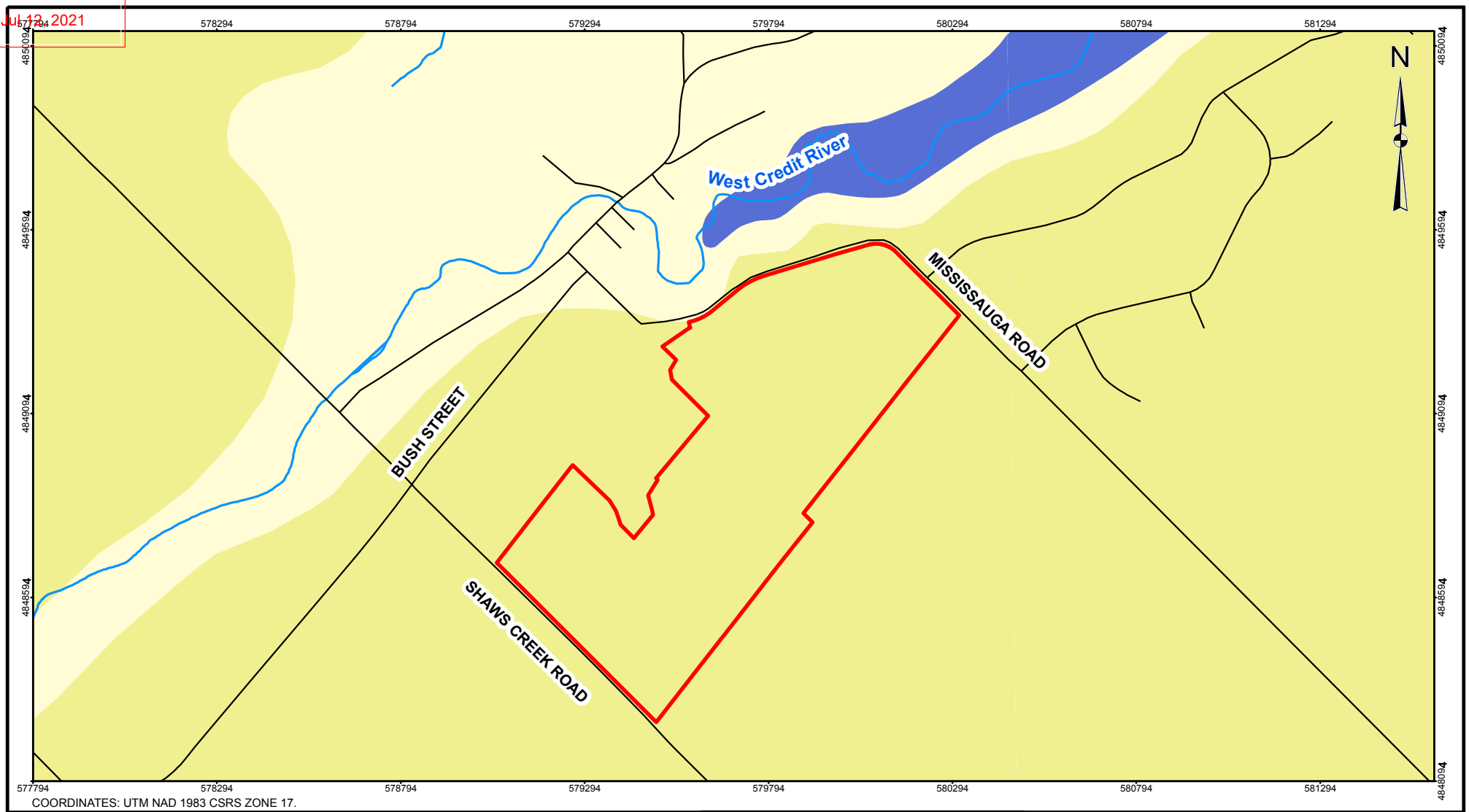

COORDINATES: UTM NAD 1983 CSRS ZONE 17.

LEGEND

- Site Boundary
- Roads
- Watercourses

Bedrock Geology

- Amabel Formation
- Clinton-Cataract Group Formation
- Queenston Formation

REFERENCE

Service Layer Credits: © OpenStreetMap (and) contributors, CC-BY-SA

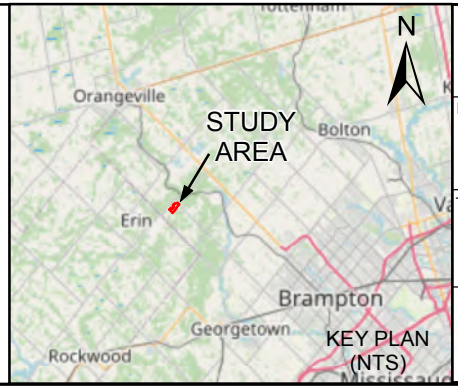

SCALE 1:15,000

150 0 150 300 450 600 Meters

PROJECT

Hydrogeological Investigation
Manors of Belfountain
Caledon, ON

TITLE

Bedrock Geology

COLE		03/19/2020	2017-0646
	GIS	B.T. 03/19/2020	REV. 1.0
	DESIGN		
	CHECK	D.B. 03/19/2020	**FIGURE 5**

TOWN OF CALEDON
PLANNING
RECEIVED
Jul 12, 2021

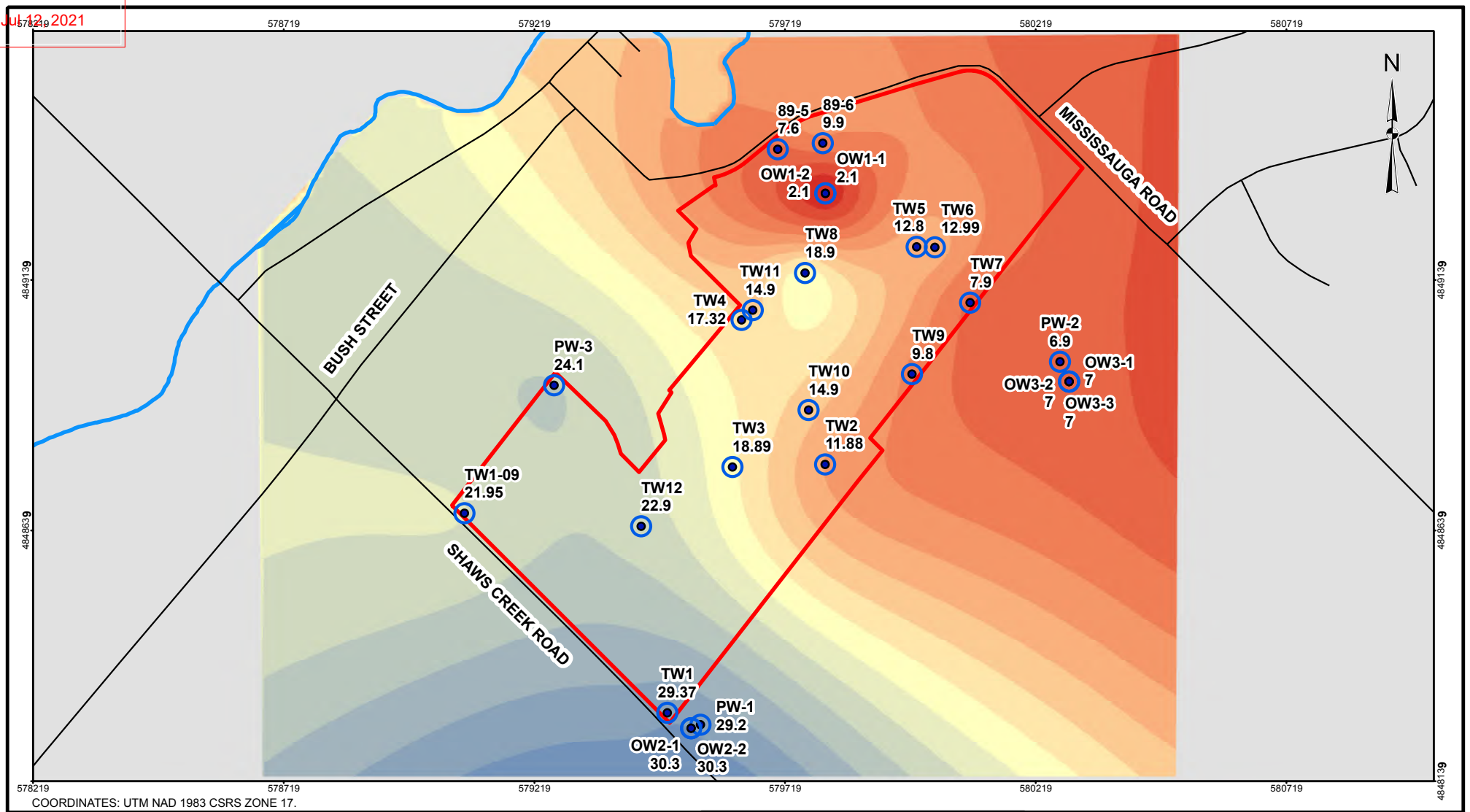

COORDINATES: UTM NAD 1983 CSRS ZONE 17.

LEGEND

- Borehole Depth to Bedrock (m)
- Site Boundary
- Roads
- Watercourses

REFERENCE

Service Layer Credits: © OpenStreetMap (and) contributors, CC-BY-SA

Depth to Bedrock (m)

- 2.1 - 4
- 4.1 - 6
- 6.1 - 8
- 8.1 - 10
- 10.1 - 12
- 12.1 - 14
- 14.1 - 16
- 16.1 - 18
- 18.1 - 20
- 20.1 - 22
- 22.1 - 24
- 24.1 - 26
- 26.1 - 28
- 28.1 - 30
- 30.1 - 32

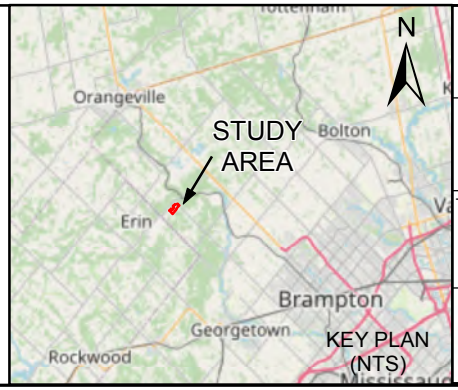

SCALE 1:11,000

100 0 100 200 300 400 500 Meters

PROJECT

Hydrogeological Investigation
Manors of Belfountain
Caledon, ON

TITLE

Depth to Bedrock

		03/19/2020	2017-0646
GIS	B.T.	03/19/2020	REV. 0.0
DESIGN			
CHECK	S.D.	03/19/2020	**FIGURE 6**

TOWN OF CALEDON
PLANNING
RECEIVED
Jul 12, 2021

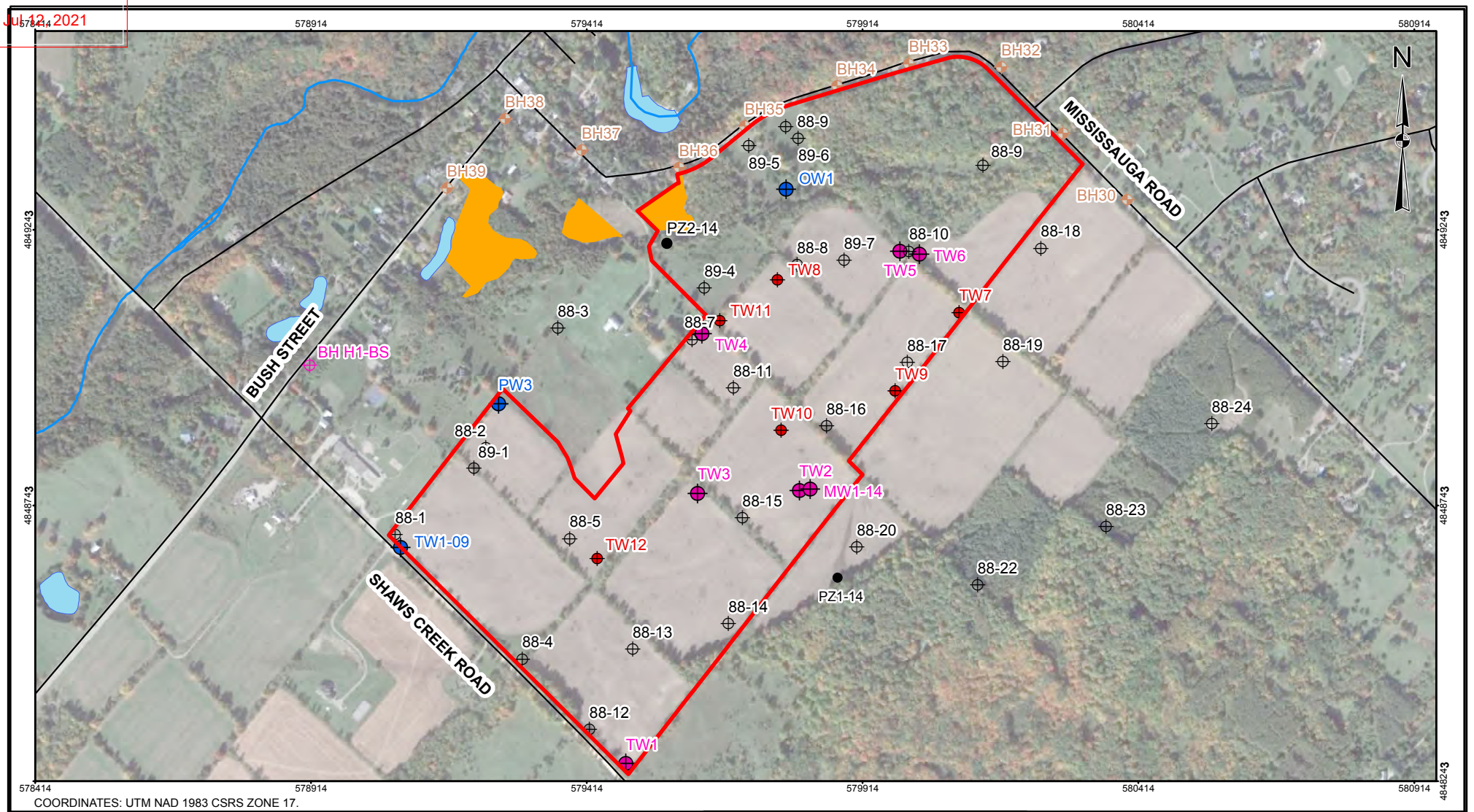

COORDINATES: UTM NAD 1983 CSRS ZONE 17.

LEGEND

- Site Boundary
- Roads
- Watercourses
- Mini-Piezometer
- Coffey (2013)
- Terraprobe (2013)
- Terraprobe Standpipes
- Burnside Wells (2016)
- Burnside Wells (2014)
- Beatty Wells
- Marshes and Swamps

REFERENCE

Service Layer Credits: © OpenStreetMap (and) contributors, CC-BY-SA
Terraprobe (2013) Borehole data sourced from Region of Peel's 2014 EA Geotechnical Report by Coffey Geotechnics.
Wetland and swamp mapping from Savanta (2018)

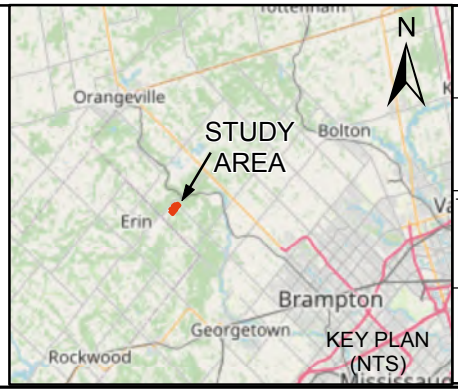

SCALE 1:10,000

100 0 100 200 300 400 Meters

PROJECT

Hydrogeological Investigation
Manors of Belfountain
Caledon, ON

TITLE

Boreholes, Wells, and Other Monitoring Locations

COLE

	03/19/2020		2017-0646
GIS	B.T.	03/19/2020	REV. 1.0
DESIGN			
CHECK	S.D.	03/19/2020	FIGURE 7

TOWN OF CALEDON
PLANNING
RECEIVED
Jul 12, 2021

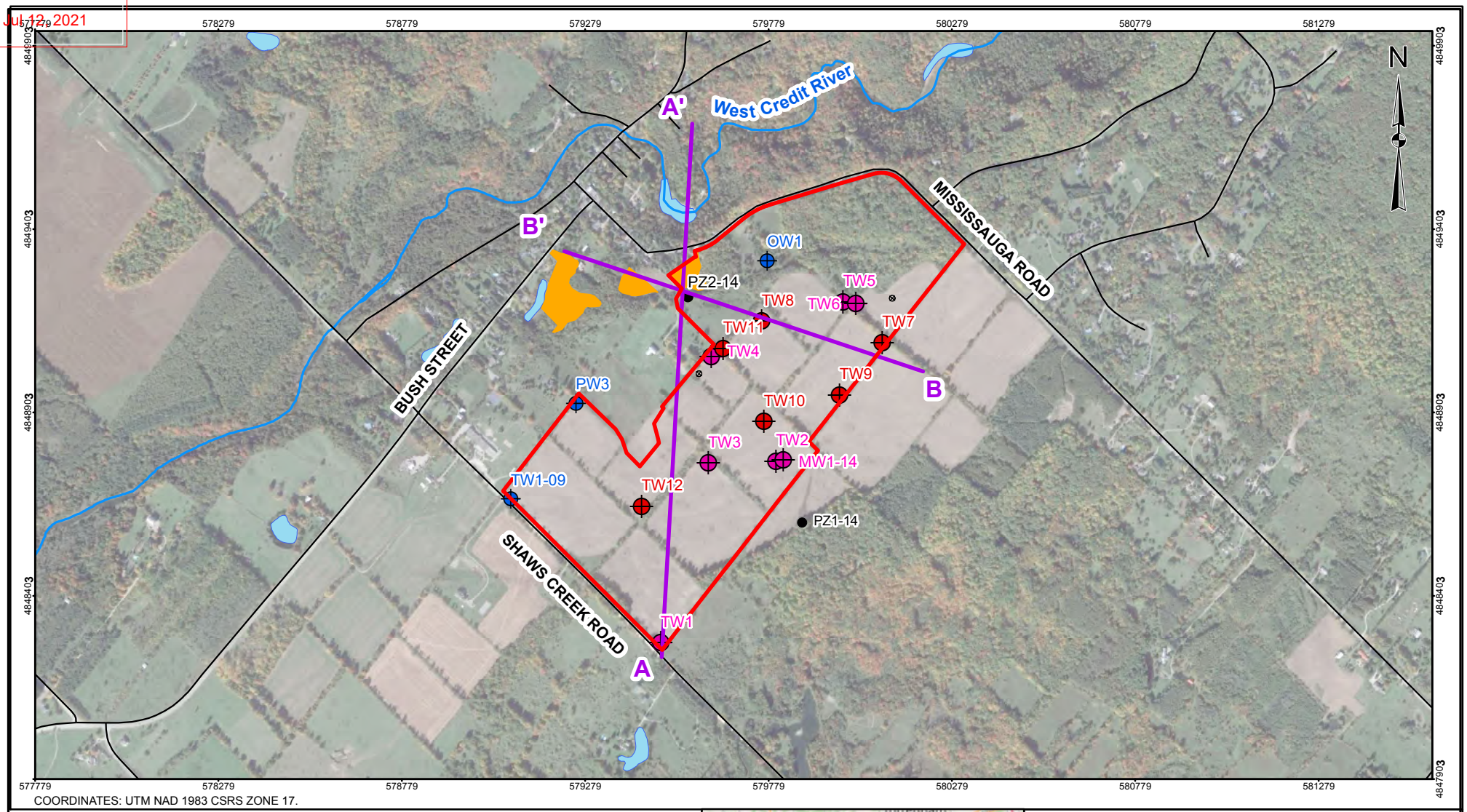

COORDINATES: UTM NAD 1983 CSRS ZONE 17.

LEGEND

- Site Boundary
- A-A
- B-B'
- Roads
- Watercourses
- Mini-Piezometer
- Burnside Wells (2016)
- Burnside Wells (2014)
- Beatty Wells
- ELC marshes and swamps

REFERENCE

Service Layer Credits: © OpenStreetMap (and) contributors, CC-BY-SA

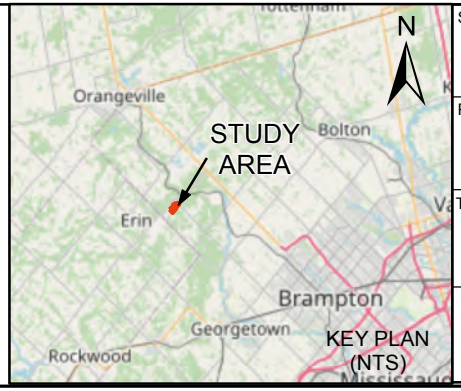

SCALE 1:15,000

150 0 150 300 450 600 Meters

PROJECT

Hydrogeological Investigation
Manors of Belfountain
Caledon, ON

TITLE

Cross-Section Plan

COLE		03/19/2020	2017-0646
	GIS	B.T. 03/19/2020	REV. 1.0
	DESIGN		
	CHECK	S.D. 03/19/2020	

FIGURE 8

TOWN OF CALEDON
PLANNING
RECEIVED
Jul 12, 2021

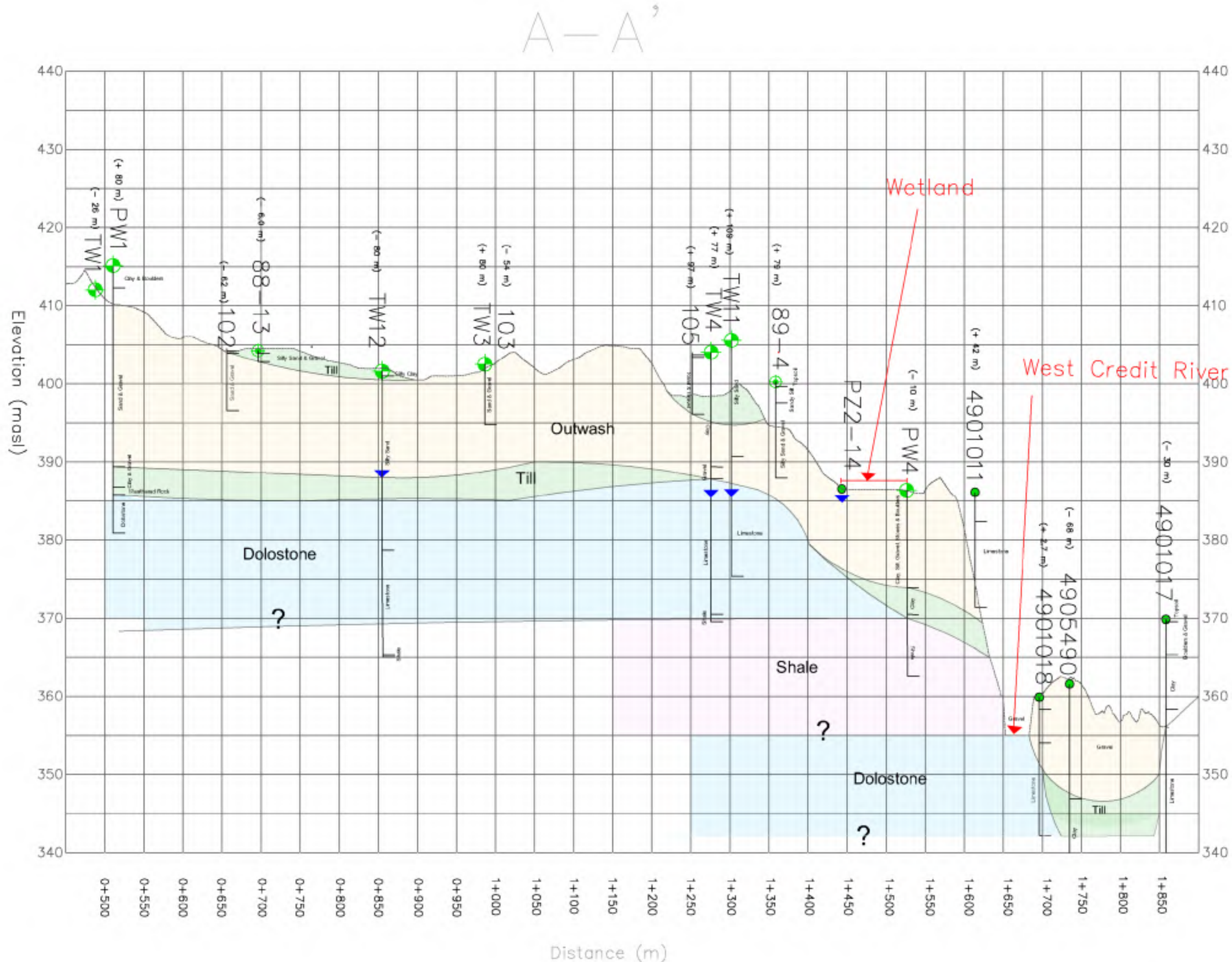

LEGEND

Outwash	
Dolostone	
Shale	

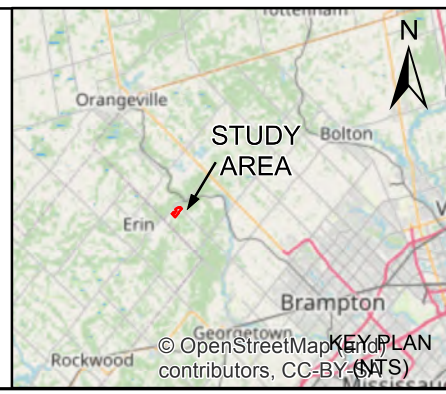

SCALE
NTS

PROJECT
Hydrogeological Investigation
Manors of Belfountain
Caledon, ON

TITLE
Cross-Section A-A'

COLE

		03/19/2020	2017-0646
GIS	B.T.	03/19/2020	REV. 0.0
DESIGN			**FIGURE 9**
CHECK	S.D.	03/19/2020	

TOWN OF CALEDON
PLANNING
RECEIVED
Jul 12, 2021

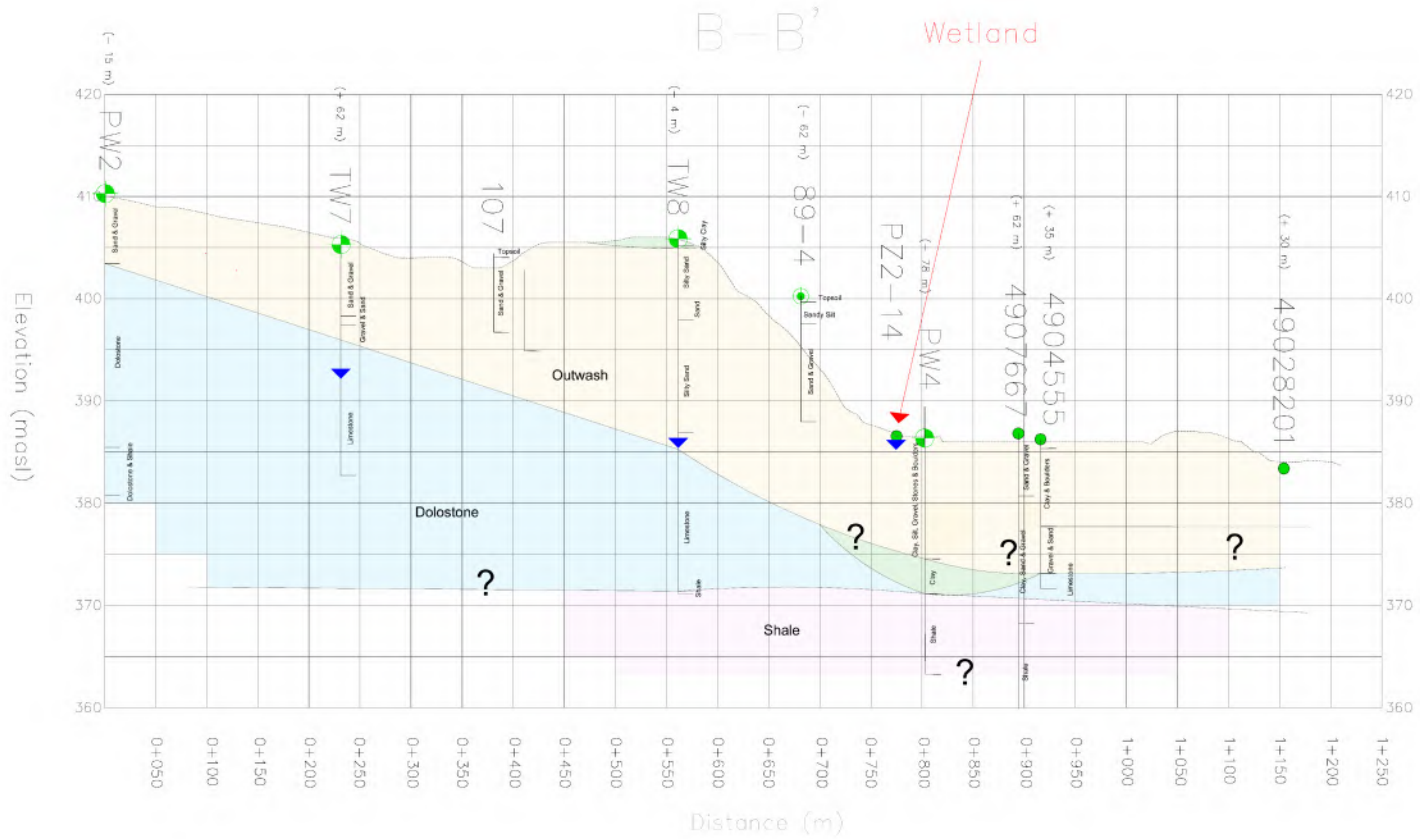

LEGEND

- Outwash
- Dolostone
- Shale

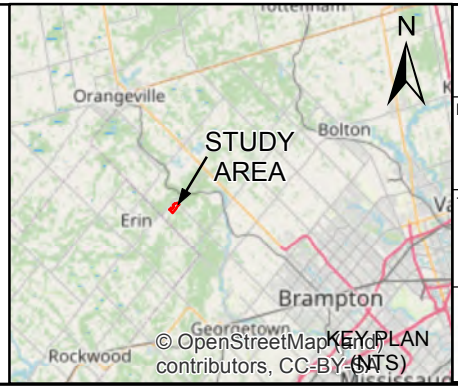

SCALE: NTS

PROJECT: Hydrogeological Investigation
Manors of Belfountain
Caledon, ON

TITLE: **Cross-Section B-B'**

		03/19/2020	2017-0646
GIS	B.T.	03/19/2020	REV. 0.0
DESIGN			
CHECK	S.D.	03/19/2020	**FIGURE 10**

TOWN OF CALEDON
PLANNING
RECEIVED
Jul 13, 2021

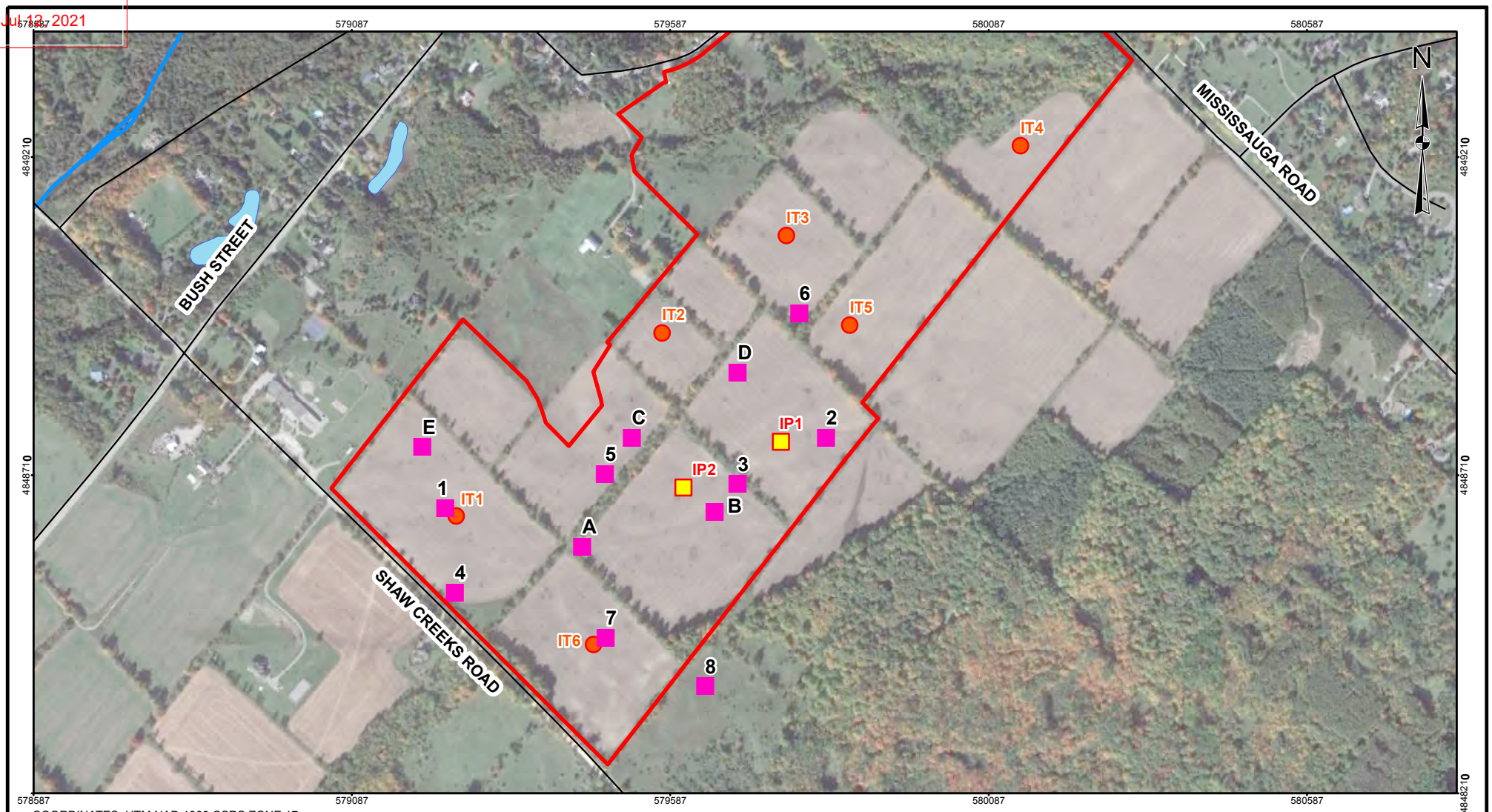

COORDINATES: UTM NAD 1983 CSRS ZONE 17.

LEGEND

- Site Boundary - 2020
- Guelph Permeameter (COLE, 2019)
- Test Pit (Burnside, 2014)
- Turf-Tec Infiltrometer (Burnside, 2014)
- Roads
- Watercourses
- Waterbody

REFERENCE

Service Layer Credits: © OpenStreetMap (and) contributors, CC-BY-SA

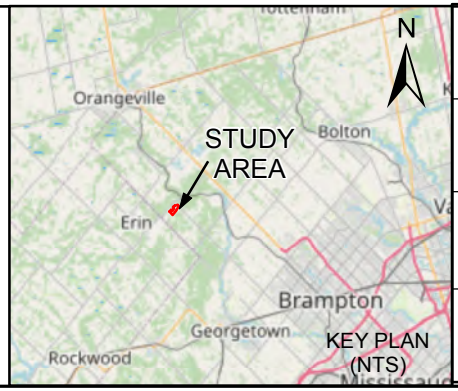

SCALE 1:8,800

80 0 80 160 240 320 Meters

PROJECT

Hydrogeological Investigation
Manors of Belfountain
Caledon, ON

TITLE

Infiltration Testing Locations

		03/19/2020	2017-0646
GIS	B.T.	03/19/2020	REV. 0.0
DESIGN			
CHECK	S.D.	03/19/2020	**FIGURE 11**

TOWN OF CALEDON
PLANNING
RECEIVED
Jul 12, 2021

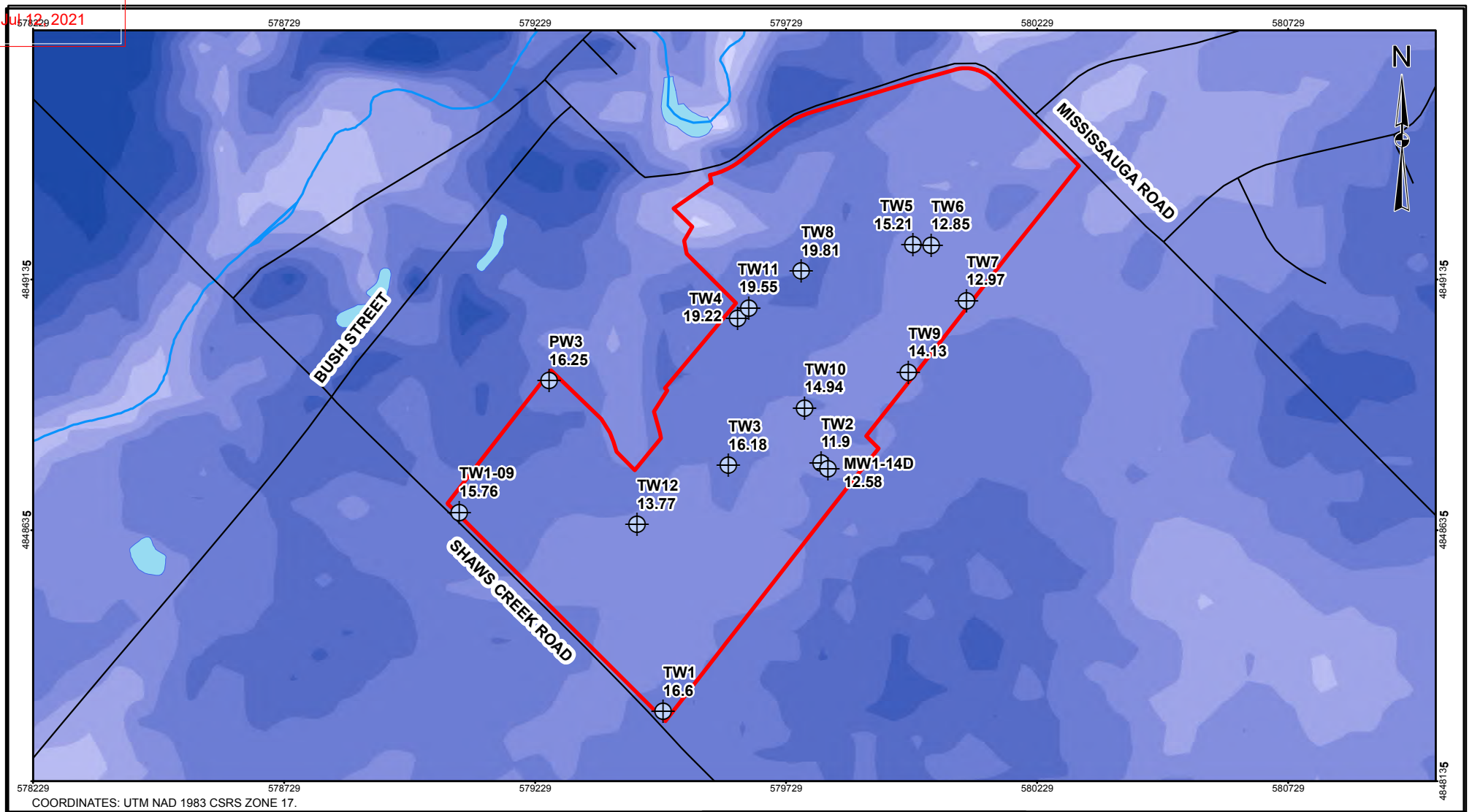

COORDINATES: UTM NAD 1983 CSRS ZONE 17.

LEGEND

- Site Boundary
- Roads
- Watercourses
- Waterbody
- Monitoring Wells

REFERENCE

Service Layer Credits: © OpenStreetMap (and) contributors, CC-BY-SA

Depth to Water (m)

- < 0
- 0.1 - 5
- 5.1 - 10
- 10.1 - 15
- 15.1 - 20
- 20.1 - 25
- 25.1 - 30
- 30.1 - 35
- 35.1 - 40
- 40.1 - 45

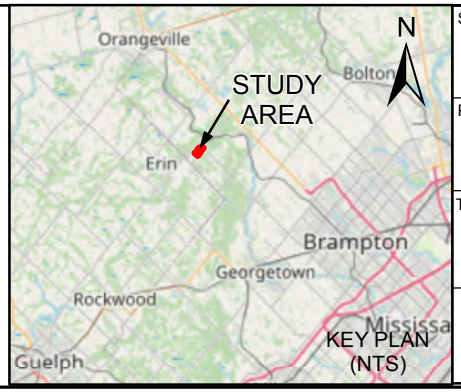

SCALE 1:11,000

100 0 100 200 300 400 Meters

PROJECT

Hydrogeological Investigation
Manors of Belfountain
Caledon, ON

TITLE

Depth to Groundwater

COLE

	03/19/2020		2017-0646
GIS	B.T.	03/19/2020	REV. 1.0
DESIGN			
CHECK	S.D.	03/19/2020	

FIGURE 12

TOWN OF CALEDON
PLANNING
RECEIVED
Jul 12, 2021

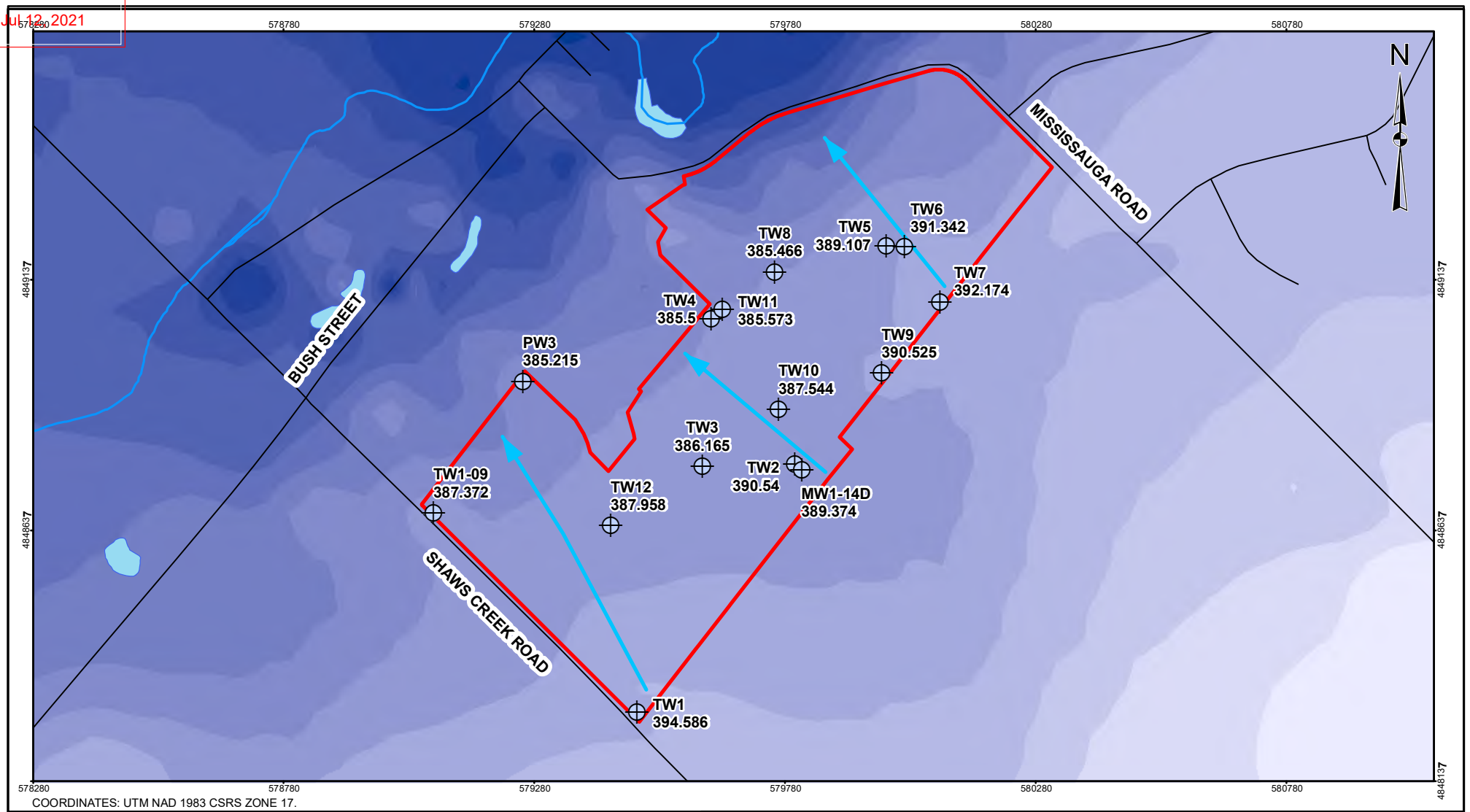

COORDINATES: UTM NAD 1983 CSRS ZONE 17.

LEGEND

- Monitoring Wells
- Site Boundary
- Roads
- Watercourses
- Groundwater Flow Direction
- Waterbody

REFERENCE

Service Layer Credits: © OpenStreetMap (and) contributors, CC-BY-SA

Groundwater Elevations (masl)

420
415
410
405
395
390
385
380
375
370
365
360
355
350
340

Note:
Water level data from October 2017

SCALE 1:11,000

100 0 100 200 300 400 Meters

PROJECT

Hydrogeological Investigation
Manors of Belfountain
Caledon, ON

TITLE

Groundwater Elevation

COLE		03/19/2020	2017-0646
	GIS	B.T. 03/19/2020	REV. 1.0
	DESIGN		
	CHECK	S.D. 03/19/2020	**FIGURE 13**

TOWN OF CALEDON
PLANNING
RECEIVED
Jul 12, 2021

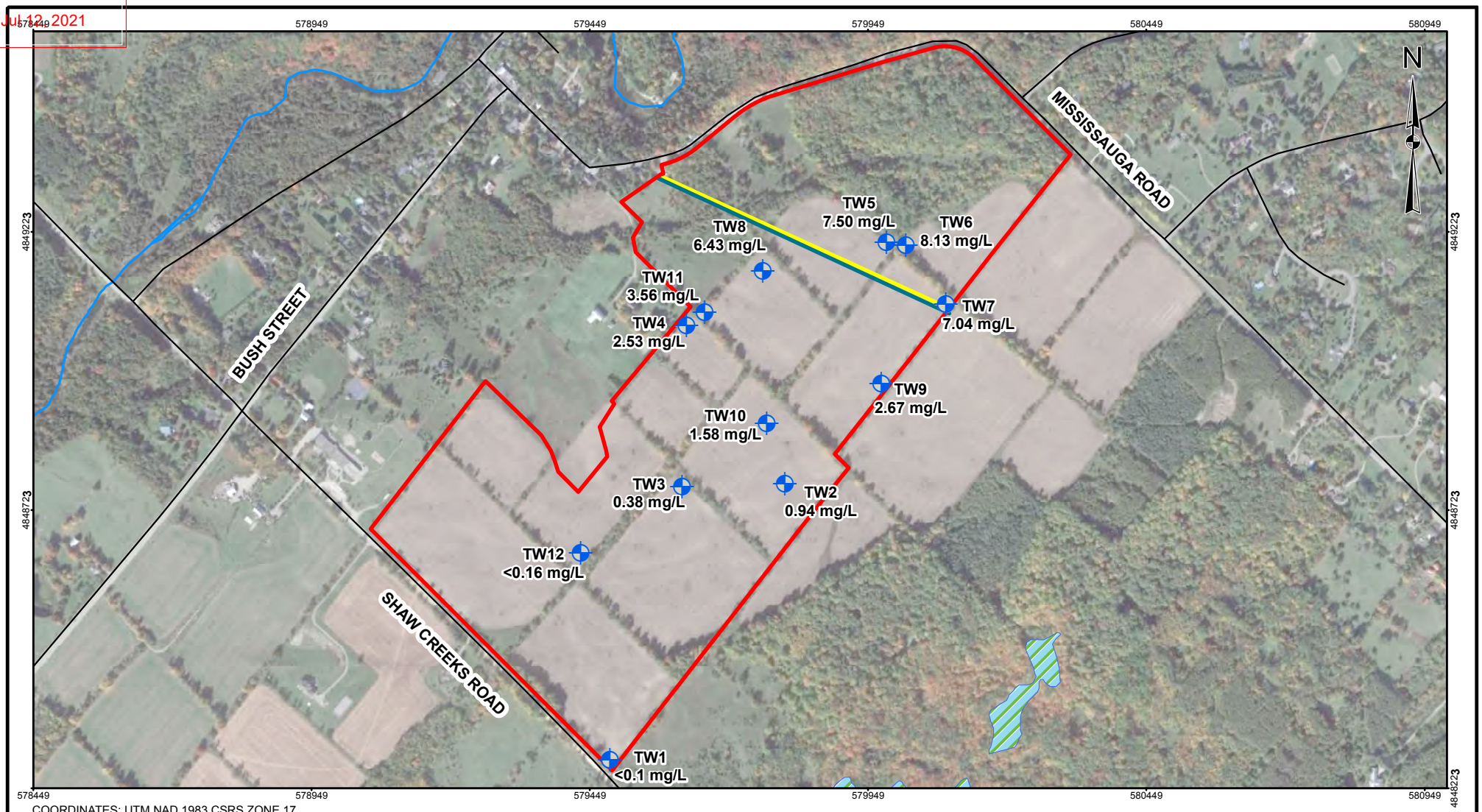

COORDINATES: UTM NAD 1983 CSRS ZONE 17.

LEGEND

- Site Boundary - 2020
- Roads
- Watercourses
- Waterbody
- Wetlands
- 7m Setback Line
- Line of Higher Nitrate Concentrations

REFERENCE

Service Layer Credits: © OpenStreetMap (and) contributors, CC-BY-SA

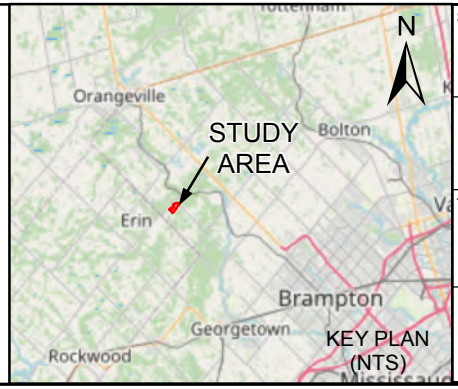

SCALE 1:10,000

100 0 100 200 300 400 500 Meters

PROJECT

Hydrogeological Investigation
Manors of Belfountain
Caledon, ON

TITLE

Average 2015-2020 Nitrate Concentrations

		03/19/2020	2017-0646
GIS	B.T.	03/19/2020	REV. 1.0
DESIGN			
CHECK	S.D.	03/19/2020	FIGURE 14

TOWN OF CALEDON
PLANNING
RECEIVED
Jul 13, 2021

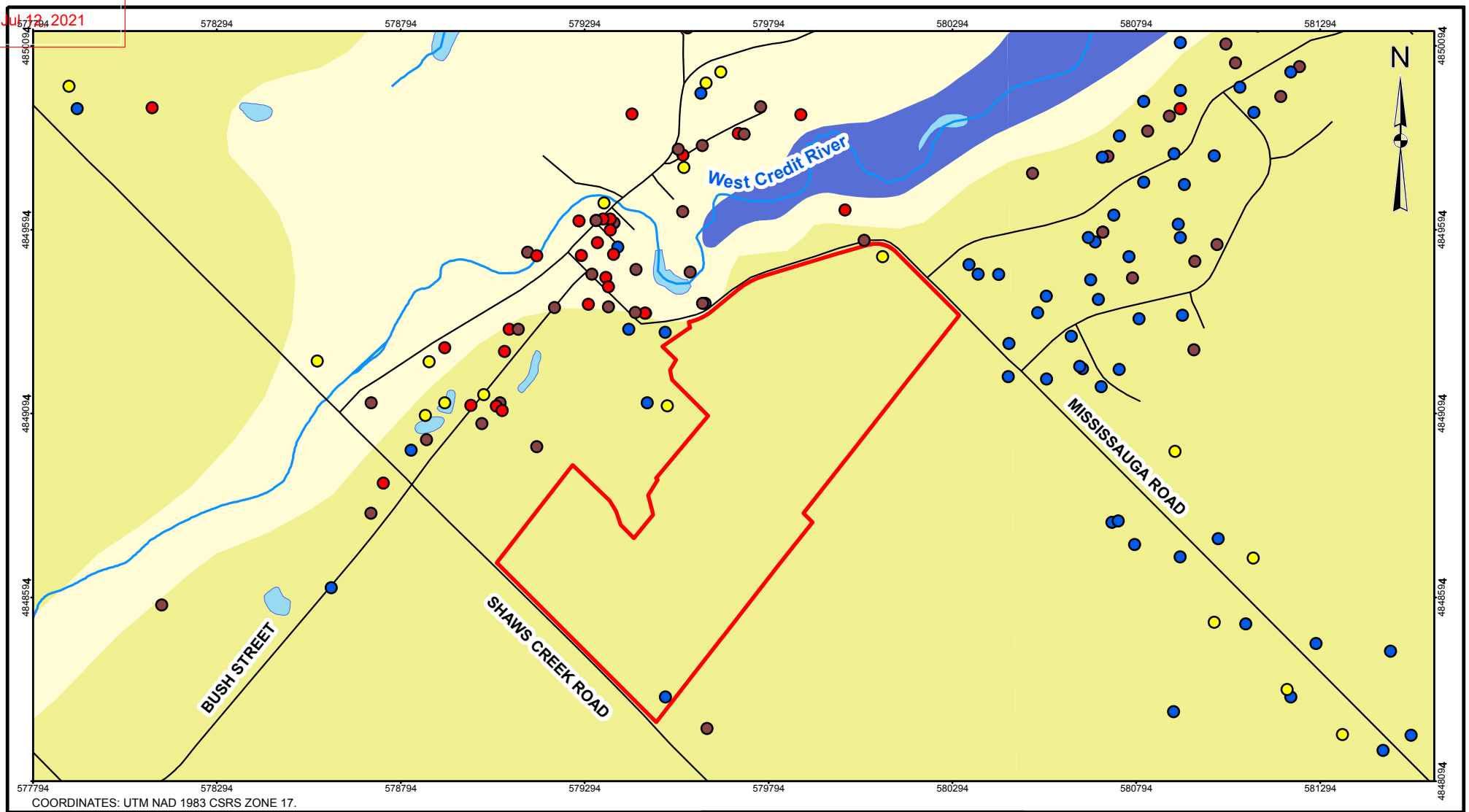

COORDINATES: UTM NAD 1983 CSRS ZONE 17.

LEGEND

- Site Boundary
- Roads
- Watercourses
- Waterbody

Bedrock Geology

- Amabel Formation
- Clinton-Cataract Group Formation
- Queenston Formation

Well Screen Lithology

- Mixed Bedrock (more than 1 unit, e.g. shale, sandstone)
- Overburden
- Limestone
- Shale

REFERENCE

Service Layer Credits: © OpenStreetMap (and) contributors, CC-BY-SA

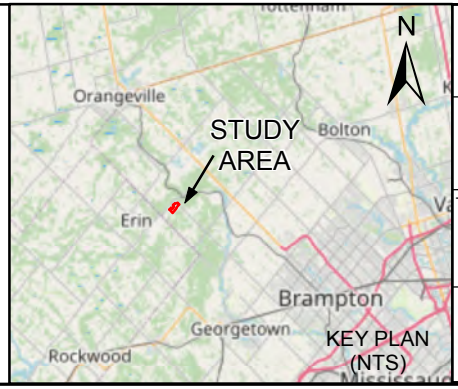

SCALE 1:15,000

150 0 150 300 450 600 Meters

PROJECT

Hydrogeological Investigation
Manors of Belfountain
Caledon, ON

TITLE

MECP Well Records

COLE		03/19/2020	2017-0646
GIS	B.T.	03/19/2020	REV. 0.0
DESIGN			FIGURE 15
CHECK	S.D.	03/19/2020	

TOWN OF CALEDON
PLANNING
RECEIVED

Jul 12, 2021

APPENDIX A

Draft Plan of Subdivision

TOWN OF CALEDON
PLANNING
RECEIVED
JUL 12, 2021

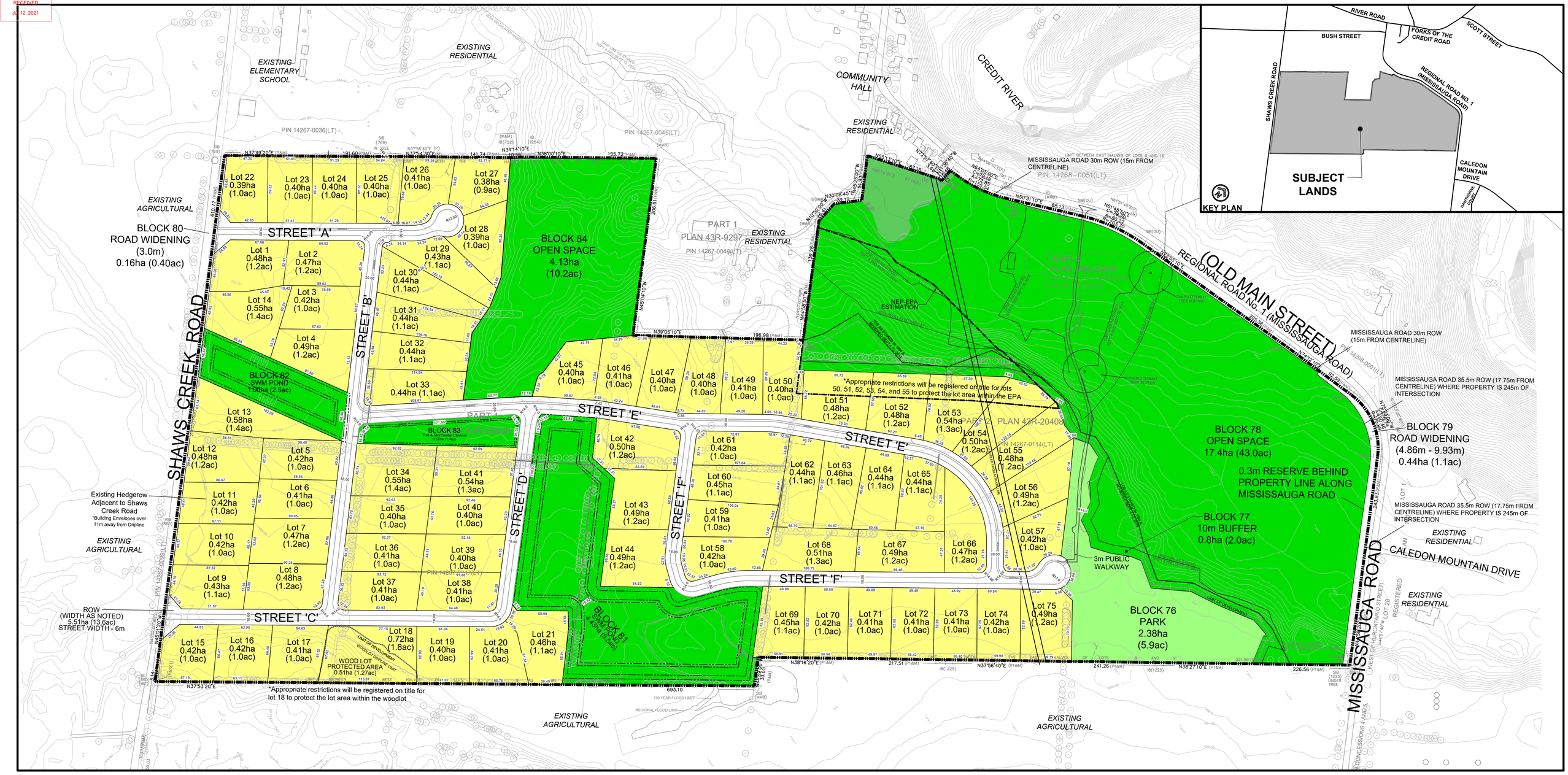

DRAFT PLAN OF SUBDIVISION
MANORS OF BELFOUNTAIN CORP

FILE # 21T-91015C

PART OF EAST HALF AND WEST HALF LOT 9
CONCESSION 5, W.H.S.
(HAMLET OF BELFOUNTAIN)
TOWN OF CALEDON,
REGIONAL MUNICIPALITY OF PEEL

SURVEYORS CERTIFICATE

I HEREBY CERTIFY THAT THE BOUNDARIES OF THE LANDS TO BE SUBDIVIDED AS SHOWN ON THIS PLAN AND THEIR RELATIONSHIP TO ADJACENT LANDS ARE CORRECTLY AND ACCURATELY SHOWN.

SIGNED _____ DATE: _____

ALISTER SANKEY, OLS
DAVID B. SEARLES SURVEYING LTD.
4255 SHERWOODTOWNE BLVD. SUITE 206
MISSISSAUGA, ON, L4Z 1Y5
PHONE: 905-273-6840
EMAIL: info@dbsearles.ca

OWNER'S AUTHORIZATION

I AUTHORIZE NICOLE YANG, PLANNING CONSULTANT, TO PREPARE AND SUBMIT THIS PLAN FOR DRAFT APPROVAL.

SIGNED _____ DATE: _____

JOHN SPINA, ASO
THE MANORS OF BELFOUNTAIN CORP.
7681 HWY 27 UNIT 16,
WOODBRIDGE, ONTARIO
L4L 4M5

ADDITIONAL INFORMATION

(UNDER SECTION 51(17) OF THE PLANNING ACT) INFORMATION REQUIRED BY CLAUSES A,B,C,D,E,F,G, & J ARE SHOWN ON THE DRAFT AND KEY PLANS.
H) INDIVIDUAL WELLS TO BE PROVIDED
I) SANDY LOAM AND CLAY LOAM
K) INDIVIDUAL SEPTIC TO BE PROVIDED; MUNICIPAL STORM SEWERS TO BE PROVIDED
L) NIL

NOTES

-Pavement illustration is diagrammatic only
-Local to local radii - approx. 14m
-Streets 'A' & 'C' to Shaws Creek Rd. daylight triangles - 15.0 x 15.0
-Top of Slope as staked in 1994, reviewed September 4 & 12, 2014
-Dripline staked Septemer 4 & 12, 2014

REVISIONS

#	Description	Date (YYYY-MM-DD)	By
1	ISSUED FOR MEETING WITH AGENCIES	2018-12-21	N.Y.
2	REVISION	2020-02-21	N.Y.
3	REVISION	2020-01-17	N.Y.
4	REVISION	2020-02-21	N.Y.
5	REVISION	2020-01-17	N.Y.
6	ISSUED FOR RESUBMISSION	2020-03-02	N.Y.
7	REVISION	2020-03-31	N.Y.
8	REVISION	2020-04-21	N.Y.
9	REVISION	2020-04-24	N.Y.

LAND USE SCHEDULE

LAND USE	LOTS/BLOCKS	AREA (HA)	AREA (AC)	UNITS
ESTATE RESIDENTIAL	1-75	33.48	82.7	75
OPEN SPACE	78,84	21.53	53.2	
PARK	76	2.38	5.9	
10m BUFFER	77	0.80	2.0	
STORMWATER PONDS	81,82	5.41	13.4	
STORMWATER CHANNEL	83	0.57	1.4	
ROAD WIDENING	79, 80	0.60	1.5	
18.0m/20.0m ROW (2,840m APPROX. LENGTH)		5.51	13.6	
TOTAL	84	70.28	173.7	75

Scale: 1=2000
April 24, 2020

TOWN OF CALEDON
PLANNING
RECEIVED

Jul 12, 2021

APPENDIX B

Borehole Logs

TOWN OF CALEDON
PLANNING
RECEIVED
Jul 12, 2021

Ontario — Ministry of the Environment

Measurements recorded in: ☒ Metric ☐ Imperial

Well Tag No. *(Place Sticker and/or Print Below)*
Tag #: A165388

TW1

Well Record
Regulation 903 Ontario Water Resources Act

Page 1 of 1

Well Owner's Information

First Name	Last Name / Organization	E-mail Address	☐ Well Constructed by Well Owner
Orb	Property Corporation		

Mailing Address (Street Number/Name)	Municipality	Province	Postal Code	Telephone No. *(inc. area code)*
2121 Olde Baseline Road	Caledon	ON	L7K0K7	

Well Location

Address of Well Location (Street Number/Name)	Township	Lot	Concession
	Town of Caledon	Pt 9	5 WHS

County/District/Municipality	City/Town/Village	Province	Postal Code
Peel	Belfountain	Ontario	

UTM Coordinates	Zone	Easting	Northing	Municipal Plan and Sublot Number	Other
NAD 83	17	579481	4848283		

Overburden and Bedrock Materials/Abandonment Sealing Record *(see instructions on the back of this form)*

General Colour	Most Common Material	Other Materials	General Description	Depth (m/ft) From	Depth (m/ft) To
Gray	Clay & stones			0	8.53
Brown	Clay & stones			8.53	29.87
Brown	limestone			29.87	39.62
Gray	Limestone			39.62	53.03
Blue	shale			53.03	53.94

Annular Space

Depth Set at (m/ft) From	Depth Set at (m/ft) To	Type of Sealant Used (Material and Type)	Volume Placed (m³/ft³)
0	10	Bentonite Grout	.73

Method of Construction

☐ Cable Tool ☐ Diamond
☒ Rotary (Conventional) ☐ Jetting
☐ Rotary (Reverse) ☐ Driving
☐ Boring ☐ Digging
☐ Air percussion
☐ Other, specify

Well Use

☐ Public ☐ Commercial ☐ Not used
☐ Domestic ☐ Municipal ☐ Dewatering
☐ Livestock ☒ Test Hole ☐ Monitoring
☐ Irrigation ☐ Cooling & Air Conditioning
☐ Industrial
☐ Other, specify

Construction Record - Casing

Inside Diameter (cm/in)	Open Hole OR Material (Galvanized, Fibreglass, Concrete, Plastic, Steel)	Wall Thickness (cm/in)	Depth (m/ft) From	Depth (m/ft) To
15.9	steel	.148	+.85	30.78
15.4	open hole		30.78	53.94

Construction Record - Screen

Outside Diameter (cm/in)	Material (Plastic, Galvanized, Steel)	Slot No.	Depth (m/ft) From	Depth (m/ft) To

Status of Well

☐ Water Supply
☐ Replacement Well
☒ Test Hole
☐ Recharge Well
☐ Dewatering Well
☐ Observation and/or Monitoring Hole
☐ Alteration (Construction)
☐ Abandoned, Insufficient Supply
☐ Abandoned, Poor Water Quality
☐ Abandoned, other, specify
☐ Other, specify

Water Details

Water found at Depth (m/ft)	Kind of Water	Gas	Other, specify
44 (m/ft)	☐ Fresh ☒ Untested	☐ Gas	☐ Other, specify
(m/ft)	☐ Fresh ☐ Untested	☐ Gas	☐ Other, specify
(m/ft)	☐ Fresh ☐ Untested	☐ Gas	☐ Other, specify

Hole Diameter

Depth (m/ft) From	Depth (m/ft) To	Diameter (cm/in)
0	30.78	22.8
30.78	53.94	15.6

Results of Well Yield Testing

After test of well yield, water was:
☒ Clear and sand free
☐ Other, specify

If pumping discontinued, give reason:

Pump intake set at (m/ft): 42.6

Pumping rate (l/min / GPM): 45

Duration of pumping: 60 hrs + 0 min

Final water level end of pumping (m/ft): 34.76

If flowing give rate (l/min / GPM)

Recommended pump depth (m/ft): 42.6

Recommended pump rate (l/min / GPM): 45

Well production (l/min / GPM)

Disinfected? ☒ Yes ☐ No

Draw Down Time (min)	Draw Down Water Level (m/ft)	Recovery Time (min)	Recovery Water Level (m/ft)
Static Level	19.19		34.76
1	23.47	1	32.68
2	26.44	2	30.74
3	28.25	3	29.10
4	30.29	4	27.68
5	31.87	5	26.46
10	33.89	10	22.70
15	34.23	15	21.25
20	34.27	20	20.73
25	34.22	25	20.50
30	34.43	30	20.36
40	34.53	40	20.30
50	34.56	50	20.19
60	34.60	60	20.09

Map of Well Location

Please provide a map below following instructions on the back.

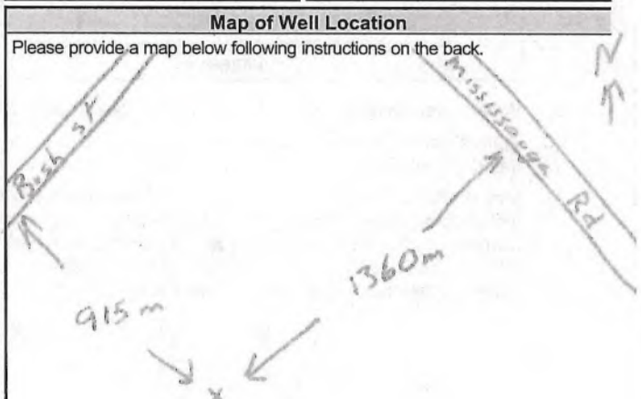

Comments:

Well Contractor and Well Technician Information

Business Name of Well Contractor	Well Contractor's Licence No.
Well Initiatives Ltd.	7121

Business Address (Street Number/Name)	Municipality
15 Townline Rd. Orangeville	

Province	Postal Code	Business E-mail Address
Ont	L9W3R4	mfo@wellinitiatives.com

Bus. Telephone No. *(inc. area code)*	Name of Well Technician (Last Name, First Name)
5199146182	Losch Kim

Well Technician's Licence No.	Signature of Technician and/or Contractor	Date Submitted
T927	Kim Losch	2021/07/05

Well owner's information package delivered	Date Package Delivered	Date Work Completed
☐ Yes ☐ No		2021/07/05

Ministry Use Only
Audit No. Z 188877
Received

0506E (2007/12) © Queen's Printer for Ontario, 2007

Well Owner's Copy

TOWN OF CALEDON
PLANNING
RECEIVED
Jul 12, 2021

Ontario

Ministry of the Environment

Well Tag No. *(Place Sticker and/or Print Below)*
Tag #: A165390

TW2

Well Record

Regulation 903 Ontario Water Resources Act

Measurements recorded in: ☒ Metric ☐ Imperial

Page 1 of 1

Well Owner's Information

First Name	Last Name / Organization	E-mail Address	☐ Well Constructed by Well Owner
	Dob Property Corporation		

Mailing Address (Street Number/Name)	Municipality	Province	Postal Code	Telephone No. *(inc. area code)*
21 3 : Old Baseline Road	Caledon	ON	L7K 0K7	

Well Location

Address of Well Location (Street Number/Name)	Township	Lot	Concession
	Town of Caledon	Pt 9	5 W HS

County/District/Municipality	City/Town/Village	Province	Postal Code
Peel	Belfountain	Ontario	

UTM Coordinates	Zone	Easting	Northing	Municipal Plan and Sublot Number	Other
NAD 8 3	17	579813	4854777		

Overburden and Bedrock Materials/Abandonment Sealing Record *(see instructions on the back of this form)*

General Colour	Most Common Material	Other Materials	General Description	Depth (m/ft) From	Depth (m/ft) To
Brown	clay			0	2.74
Grey	clay & gravel			2.74	7.62
Grey	clay & silt			7.62	8.22
Grey	clay & stones			8.22	11.88
white	limestone			11.88	12.19
Grey	limestone			12.19	13.10
Brown	limestone			13.10	17.06
Grey	limestone			17.06	20.11

Annular Space

Depth Set at (m/ft) From	To	Type of Sealant Used *(Material and Type)*	Volume Placed (m^3/ft^3)
0	0	Bentonite Grout	.25

Results of Well Yield Testing

After test of well yield, water was:
☐ Clear and sand free
☐ Other, *specify* _____

If pumping discontinued, give reason:

Pump intake set at *(m/ft)*

Pumping rate *(l/min / GPM)*

Duration of pumping _____ hrs + _____ min

Final water level end of pumping *(m/ft)*

If flowing give rate *(l/min / GPM)*

Recommended pump depth *(m/ft)*

Recommended pump rate *(l/min / GPM)*

Well production *(l/min / GPM)*

Disinfected? ☒ Yes ☐ No

	Draw Down		Recovery	
	Time *(min)*	Water Level *(m/ft)*	Time *(min)*	Water Level *(m/ft)*
Static Level				
1			1	
2			2	
3			3	
4			4	
5			5	
10			10	
15			15	
20			20	
25			25	
30			30	
40			40	
50			50	
60			60	

Method of Construction

☐ Cable Tool ☐ Diamond
☒ Rotary (Conventional) ☐ Jetting
☐ Rotary (Reverse) ☐ Driving
☐ Boring ☐ Digging
☐ Air percussion
☐ Other, *specify* _____

Well Use

☐ Public ☐ Commercial ☐ Not used
☐ Domestic ☐ Municipal ☐ Dewatering
☐ Livestock ☒ Test Hole ☒ Monitoring
☐ Irrigation ☐ Cooling & Air Conditioning
☐ Industrial
☐ Other, *specify* _____

Construction Record - Casing

Inside Diameter *(cm/in)*	Open Hole OR Material (Galvanized, Fibreglass, Concrete, Plastic, Steel)	Wall Thickness *(cm/in)*	Depth (m/ft) From	Depth (m/ft) To
15.9	steel	.318	1.66	12.49
15.9	open hole		12.49	20.11

Construction Record - Screen

Outside Diameter *(cm/in)*	Material (Plastic, Galvanized, Steel)	Slot No.	Depth (m/ft) From	Depth (m/ft) To

Status of Well

☐ Water Supply
☐ Replacement Well
☒ Test Hole
☐ Recharge Well
☐ Dewatering Well
☒ Observation and/or Monitoring Hole
☐ Alteration (Construction)
☐ Abandoned, Insufficient Supply
☐ Abandoned, Poor Water Quality
☐ Abandoned, other, *specify*
☐ Other, *specify*

Map of Well Location

Please provide a map below following instructions on the back.

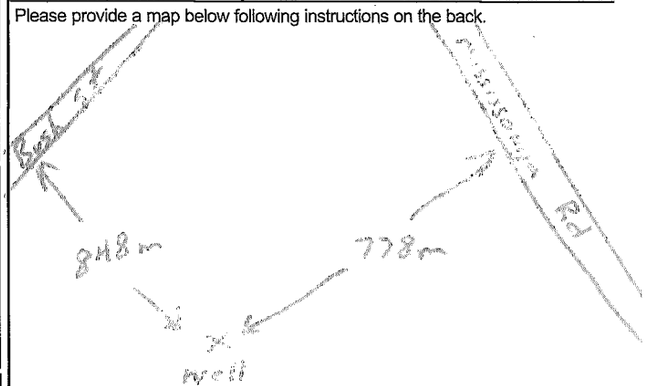

Comments:

Water Details

Water found at Depth	Kind of Water	
20.11 (m/ft) ☐ Gas	☐ Fresh ☒ Untested	☐ Other, *specify*
(m/ft) ☐ Gas	☐ Fresh ☐ Untested	☐ Other, *specify*
(m/ft) ☐ Gas	☐ Fresh ☐ Untested	☐ Other, *specify*

Hole Diameter

Depth (m/ft) From	To	Diameter *(cm/in)*
0	12.49	22.8
12.49	20.11	15.9

Well Contractor and Well Technician Information

Business Name of Well Contractor	Well Contractor's Licence No.
Will Initiatives Ltd.	7120

Business Address (Street Number/Name)	Municipality
15 Townline Rd. Orangeville	

Province	Postal Code	Business E-mail Address
Ont	L9W3R4	info@willinitiatives.com

Bus. Telephone No. *(inc. area code)*	Name of Well Technician (Last Name, First Name)
519 941 6528 9	Lach Kim

Well Technician's Licence No.	Signature of Technician and/or Contractor	Date Submitted
1517		8 12 2021

Well owner's information package delivered	Date Package Delivered	Date Work Completed
☐ Yes ☐ No		2021 M08 D12

Ministry Use Only
Audit No. Z 188872
Received

0506E (2007/12) © Queen's Printer for Ontario, 2007

Well Owner's Copy

TOWN OF CALEDON
PLANNING
RECEIVED
Jul 12, 2021

Ontario

Ministry of the Environment

TW3 30L-1N3

Well Record

Regulation 903 Ontario Water Resources Act

Page 1 of 1

Well Tag No. *(Place Sticker and/or Print Below)*: Tag #: A165393

Measurements recorded in: ☒ Metric ☐ Imperial

Well Owner's Information

First Name	Last Name / Organization	E-mail Address	☐ Well Constructed by Well Owner
	ORB Property Corporation		

Mailing Address (Street Number/Name)	Municipality	Province	Postal Code	Telephone No. *(inc. area code)*
2121 Olde Baseline Road		ON	L7Cb K7	

Well Location

Address of Well Location (Street Number/Name)	Township	Lot	Concession
	Town of Caledon	Pt 9	5 WHS

County/District/Municipality	City/Town/Village	Province	Postal Code
Peel	Bolton	Ontario	

UTM Coordinates	Zone	Easting	Northing	Municipal Plan and Sublot Number	Other
NAD 83	17	579995	4849204		

Overburden and Bedrock Materials/Abandonment Sealing Record *(see instructions on the back of this form)*

General Colour	Most Common Material	Other Materials	General Description	Depth (m/ft) From	Depth (m/ft) To
Red	Clay & stones			0	10.97
Grey	Clay & stones			10.97	18.89
Brown	limestone			18.89	26.21
Grey	limestone			26.21	32.61
Dark Brown	limestone			32.61	35.35
Blue	shale			35.35	35.96

Annular Space

Depth Set at (m/ft) From	Depth Set at (m/ft) To	Type of Sealant Used (Material and Type)	Volume Placed (m³/ft³)
0	10	Bentonite Grout	.75

Method of Construction

☐ Cable Tool ☐ Diamond
☒ Rotary (Conventional) ☐ Jetting
☐ Rotary (Reverse) ☐ Driving
☐ Boring ☐ Digging
☐ Air percussion
☐ Other, *specify*

Well Use

☐ Public ☐ Commercial ☐ Not used
☐ Domestic ☐ Municipal ☐ Dewatering
☐ Livestock ☒ Test Hole ☐ Monitoring
☐ Irrigation ☐ Cooling & Air Conditioning
☐ Industrial
☐ Other, *specify*

Construction Record - Casing

Inside Diameter (cm/in)	Open Hole OR Material (Galvanized, Fibreglass, Concrete, Plastic, Steel)	Wall Thickness (cm/in)	Depth (m/ft) From	Depth (m/ft) To
15.9	Steel	.48	.98	22.8
15.4	open hole		22.8	35.96

Construction Record - Screen

Outside Diameter (cm/in)	Material (Plastic, Galvanized, Steel)	Slot No.	Depth (m/ft) From	Depth (m/ft) To

Status of Well

☐ Water Supply
☐ Replacement Well
☒ Test Hole
☐ Recharge Well
☐ Dewatering Well
☐ Observation and/or Monitoring Hole
☐ Alteration (Construction)
☐ Abandoned, Insufficient Supply
☐ Abandoned, Poor Water Quality
☐ Abandoned, other, *specify*
☐ Other, *specify*

Water Details

Water found at Depth (m/ft)	Kind of Water	Other, specify
33 (m/ft) ☐ Gas	☐ Fresh ☒ Untested	☐ Other
(m/ft) ☐ Gas	☐ Fresh ☐ Untested	☐ Other
(m/ft) ☐ Gas	☐ Fresh ☐ Untested	☐ Other

Hole Diameter

Depth (m/ft) From	Depth (m/ft) To	Diameter (cm/in)
0	19.81	22.8
19.81	35.96	15.6

Results of Well Yield Testing

After test of well yield, water was:
☒ Clear and sand free
☐ Other, *specify*

If pumping discontinued, give reason:

Pump intake set at (m/ft): 31.1

Pumping rate (l/min / GPM): 94

Duration of pumping: 60 hrs + 0 min

Final water level end of pumping (m/ft): 23.62

If flowing give rate (l/min / GPM):

Recommended pump depth (m/ft): 31.1

Recommended pump rate (l/min / GPM): 90

Well production (l/min / GPM):

Disinfected? ☒ Yes ☐ No

Draw Down Time (min)	Draw Down Water Level (m/ft)	Recovery Time (min)	Recovery Water Level (m/ft)
Static Level	15.80		23.62
1	19.01	1	20.01
2	20.77	2	18.43
3	21.42	3	17.55
4	21.84	4	17.09
5	22.22	5	16.86
10	22.76	10	16.51
15	23.08	15	16.38
20	23.27	20	16.28
25	23.32	25	16.22
30	23.38	30	16.16
40	23.46	40	16.07
50	23.52	50	16.02
60	23.53	60	15.99

Map of Well Location

Please provide a map below following instructions on the back.

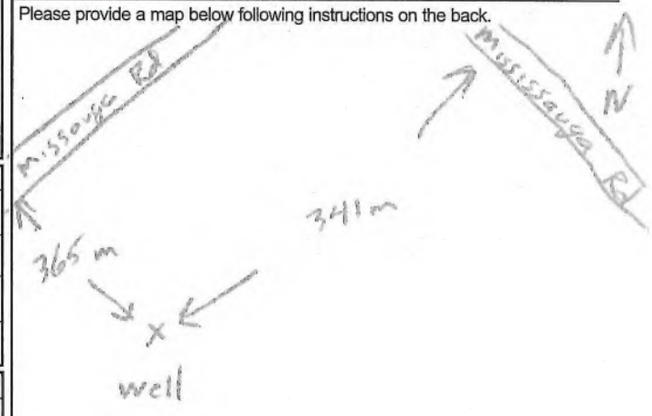

Comments:

Well Contractor and Well Technician Information

Business Name of Well Contractor	Well Contractor's Licence No.
Well Initiatives Ltd	7121

Business Address (Street Number/Name)	Municipality
15 Townline Rd. Orangeville	

Province	Postal Code	Business E-mail Address
Ont.	L9W3R4	info@wiltinitatives.com

Bus. Telephone No. *(inc. area code)*	Name of Well Technician (Last Name, First Name)
519 941 6812 89	Losch Kim

Well Technician's Licence No.	Signature of Technician and/or Contractor	Date Submitted
1917	Kim Losch	2021 07 09

Well owner's information package delivered: ☐ Yes ☐ No

Date Package Delivered: Y Y Y Y M M D D

Date Work Completed: 2021 07 09

Ministry Use Only

Audit No: Z 188876

Received

TOWN OF CALEDON
PLANNING
RECEIVED
Jul 12, 2021

Ontario — Ministry of the Environment

Measurements recorded in: ☒ Metric ☐ Imperial

Well Tag No. *(Place Sticker and/or Print Below)*: Tag #: A165392

TW4

Well Record

Regulation 903 Ontario Water Resources Act

Page 1 of 1

Well Owner's Information

First Name	Last Name / Organization	E-mail Address	☐ Well Constructed by Well Owner
	Oak Property Corporation		

Mailing Address (Street Number/Name)	Municipality	Province	Postal Code	Telephone No. *(inc. area code)*
2121 Olde Base line Road	Caledon	ON	L7C0K7	

Well Location

Address of Well Location (Street Number/Name)	Township	Lot	Concession
	Town of Caledon	Pt 9	5 WHS

County/District/Municipality	City/Town/Village	Province	Postal Code
Peel	Bolton Mountain	Ontario	

UTM Coordinates	Zone	Easting	Northing	Municipal Plan and Sublot Number	Other
NAD 83	17	579631	4849072		

Overburden and Bedrock Materials/Abandonment Sealing Record *(see instructions on the back of this form)*

General Colour	Most Common Material	Other Materials	General Description	Depth (m/ft) From	Depth (m/ft) To
Gray	Clay & stones			0	14.63
Brown	clay			14.63	15.84
	Gravel			15.84	17.37
Brown	limestone			17.37	34.74
Blue	shale			34.74	35.66

Annular Space

Depth Set at (m/ft) From	Depth Set at (m/ft) To	Type of Sealant Used (Material and Type)	Volume Placed (m³/ft³)
0	10	Bentonite Grout	.75

Method of Construction

☐ Cable Tool ☐ Diamond ☒ Rotary (Conventional) ☐ Jetting ☐ Rotary (Reverse) ☐ Driving ☐ Boring ☐ Digging ☐ Air percussion ☐ Other, *specify*

Well Use

☐ Public ☐ Commercial ☐ Not used ☐ Domestic ☐ Municipal ☐ Dewatering ☐ Livestock ☒ Test Hole ☐ Monitoring ☐ Irrigation ☐ Cooling & Air Conditioning ☐ Industrial ☐ Other, *specify*

Construction Record - Casing

Inside Diameter (cm/in)	Open Hole OR Material (Galvanized, Fibreglass, Concrete, Plastic, Steel)	Wall Thickness (cm/in)	Depth (m/ft) From	Depth (m/ft) To
15.9	steel	.48	0.60	17.67
15.4	open hole		17.67	35.66

Construction Record - Screen

Outside Diameter (cm/in)	Material (Plastic, Galvanized, Steel)	Slot No.	Depth (m/ft) From	Depth (m/ft) To

Status of Well

☐ Water Supply ☐ Replacement Well ☒ Test Hole ☐ Recharge Well ☐ Dewatering Well ☐ Observation and/or Monitoring Hole ☐ Alteration (Construction) ☐ Abandoned, Insufficient Supply ☐ Abandoned, Poor Water Quality ☐ Abandoned, other, *specify* ☐ Other, *specify*

Water Details

Water found at Depth (m/ft)	☐ Gas	Kind of Water: ☐ Fresh ☒ Untested ☐ Other, *specify*
32		
		Kind of Water: ☐ Fresh ☐ Untested ☐ Other, *specify*
		Kind of Water: ☐ Fresh ☐ Untested ☐ Other, *specify*

Hole Diameter

Depth (m/ft) From	Depth (m/ft) To	Diameter (cm/in)
0	17.67	22.8
17.67	35.66	15.6

Results of Well Yield Testing

After test of well yield, water was: ☒ Clear and sand free ☐ Other, *specify*

If pumping discontinued, give reason:

Pump intake set at (m/ft): 30

Pumping rate (l/min / GPM): 30.3

Duration of pumping: 6 hrs + 0 min

Final water level end of pumping (m/ft): 19.71

If flowing give rate (l/min / GPM):

Recommended pump depth (m/ft): 30

Recommended pump rate (l/min / GPM): 30.3

Well production (l/min / GPM):

Disinfected? ☒ Yes ☐ No

	Draw Down Time (min)	Draw Down Water Level (m/ft)	Recovery Time (min)	Recovery Water Level (m/ft)
Static Level		19.56		19.71
1		19.68	1	19.59
2		19.69	2	19.58
3		19.69	3	19.58
4		19.69	4	19.58
5		19.69	5	19.58
10		19.69	10	19.575
15		19.69	15	19.575
20		19.69	20	19.575
25		19.695	25	19.575
30		19.695	30	19.575
40		19.695	40	19.575
50		19.70	50	19.57
60		19.70	60	19.57

Map of Well Location

Please provide a map below following instructions on the back.

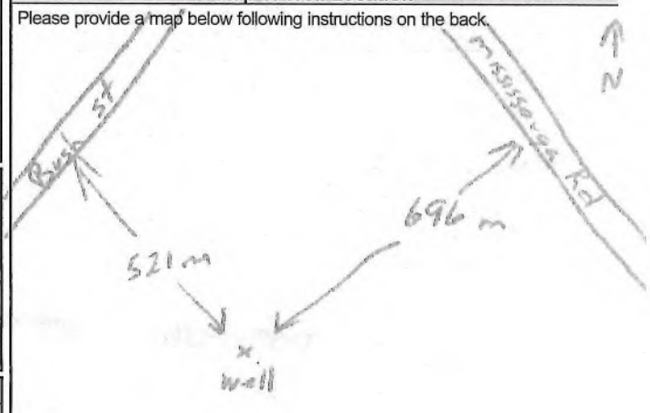

Comments:

Well Contractor and Well Technician Information

Business Name of Well Contractor	Well Contractor's Licence No.
Well Initiatives Ltd	7211

Business Address (Street Number/Name)	Municipality
15 Townline Rd Orangeville	

Province	Postal Code	Business E-mail Address
Ont	L9W3R4	info@wellinitiatives.com

Bus. Telephone No. *(inc. area code)*	Name of Well Technician (Last Name, First Name)
5197846289	Losch Kim

Well Technician's Licence No.	Signature of Technician and/or Contractor	Date Submitted
7927		2021/07/12

Well owner's information package delivered: ☐ Yes ☒ No

Date Package Delivered: YYYY MM DD

Date Work Completed: 2021/07/12

Ministry Use Only

Audit No. Z188874

Received

 © Queen's Printer for Ontario, 2007

Well Owner's Copy

TOWN OF CALEDON
PLANNING
RECEIVED
Jul 12, 2021

Ontario — Ministry of the Environment

Well Tag No. *(Place Sticker and/or Print Below)*
Tag #: A165391

TWS 30K - TWS

Well Record

Regulation 903 Ontario Water Resources Act

Page 1 of 1

Measurements recorded in: ☑ Metric ☐ Imperial

Well Owner's Information

First Name	Last Name / Organization	E-mail Address	☐ Well Constructed by Well Owner
	Orb Property Corporation		

Mailing Address (Street Number/Name)	Municipality	Province	Postal Code	Telephone No. *(inc. area code)*
2121 Olde Baseline Road	Caledon	ON	L7E0K7	

Well Location

Address of Well Location (Street Number/Name)	Township	Lot	Concession
	Town of Caledon	Pt 9	5 WHS

County/District/Municipality	City/Town/Village	Province	Postal Code
Peel	Belfountain	Ontario	

UTM Coordinates	Zone	Easting	Northing	Municipal Plan and Sublot Number	Other
NAD 83	17	579614	4834887		

Overburden and Bedrock Materials/Abandonment Sealing Record *(see instructions on the back of this form)*

General Colour	Most Common Material	Other Materials	General Description	Depth (m/ft) From	To
Red	Clay & stones			0	5.48
Grey	Clay & stones			5.48	12.80
Brown	limestone			12.80	31.39
Blue	Shale			31.39	32.30

Annular Space

Depth Set at (m/ft) From	To	Type of Sealant Used *(Material and Type)*	Volume Placed *(m³/ft³)*
0	10	Bentonite Grout	.95

Method of Construction

☐ Cable Tool ☐ Diamond
☑ Rotary (Conventional) ☐ Jetting
☐ Rotary (Reverse) ☐ Driving
☐ Boring ☐ Digging
☐ Air percussion
☐ Other, *specify*

Well Use

☐ Public ☐ Commercial ☐ Not used
☐ Domestic ☐ Municipal ☐ Dewatering
☐ Livestock ☑ Test Hole ☐ Monitoring
☐ Irrigation ☐ Cooling & Air Conditioning
☐ Industrial
☐ Other, *specify*

Construction Record - Casing

Inside Diameter *(cm/in)*	Open Hole OR Material (Galvanized, Fibreglass, Concrete, Plastic, Steel)	Wall Thickness *(cm/in)*	Depth (m/ft) From	To
15.9	steel	.48	+.60	13.41
15.4	open hole		13.41	32.30

Construction Record - Screen

Outside Diameter *(cm/in)*	Material (Plastic, Galvanized, Steel)	Slot No.	Depth (m/ft) From	To

Status of Well

☐ Water Supply
☐ Replacement Well
☑ Test Hole
☐ Recharge Well
☐ Dewatering Well
☐ Observation and/or Monitoring Hole
☐ Alteration (Construction)
☐ Abandoned, Insufficient Supply
☐ Abandoned, Poor Water Quality
☐ Abandoned, other, *specify*
☐ Other, *specify*

Water Details

Water found at Depth (m/ft)	Kind of Water		Hole Diameter Depth (m/ft) From	To	Diameter *(cm/in)*
30 (m/ft) ☐ Gas	☐ Fresh ☑ Untested ☐ Other, *specify*		0	13.41	22.9
(m/ft) ☐ Gas	☐ Fresh ☐ Untested ☐ Other, *specify*		13.41	32.30	15.6
(m/ft) ☐ Gas	☐ Fresh ☐ Untested ☐ Other, *specify*				

Results of Well Yield Testing

After test of well yield, water was:
☑ Clear and sand free
☐ Other, *specify*

If pumping discontinued, give reason:

Pump intake set at (m/ft): 27.5

Pumping rate (l/min / GPM): 20

Duration of pumping: 6 hrs + 0 min

Final water level end of pumping (m/ft): 27.12

If flowing give rate (l/min / GPM):

Recommended pump depth (m/ft): 27

Recommended pump rate (l/min / GPM): ~~20~~ 18

Well production (l/min / GPM):

Disinfected? ☑ Yes ☐ No

Draw Down Time (min)	Water Level (m/ft)	Recovery Time (min)	Water Level (m/ft)
Static Level	15.34	0	27.12
1	16.97	1	22.01
2	18.73	2	21.33
3	20.25	3	19.76
4	22.89	4	18.67
5	22.89	5	18.13
10	22.00	10	~~17.280~~
15	22.22	15	17.19 16.89
20	22.38	20	16.81
25	22.56	25	16.76
30	22.65	30	16.70
40	22.81	40	16.66
50	22.99	50	16.63
60	23.06	60	16.61

Map of Well Location

Please provide a map below following instructions on the back.

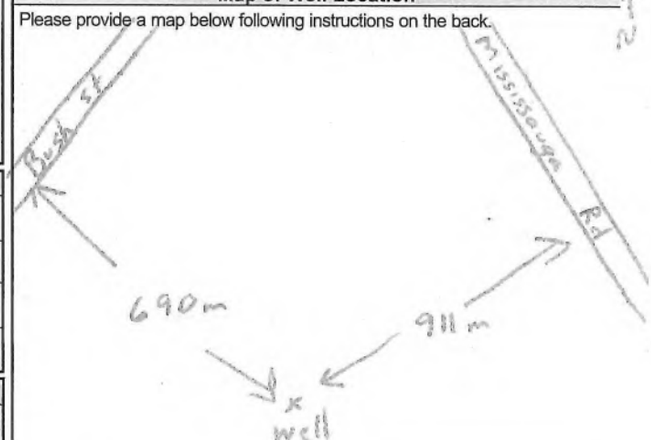

Comments:

Well Contractor and Well Technician Information

Business Name of Well Contractor	Well Contractor's Licence No.
Well Initiatives Ltd.	7121

Business Address (Street Number/Name)	Municipality
15 Townline Rd. Orangeville	

Province	Postal Code	Business E-mail Address
Ont.	L9W3R4	info@wellinitiatives.com

Bus. Telephone No. *(inc. area code)*	Name of Well Technician (Last Name, First Name)
5194168289	Losch Kim

Well Technician's Licence No.	Signature of Technician and/or Contractor	Date Submitted
1927	Kim Losch	2021 04 07

Well owner's information package delivered: ☐ Yes ☐ No

Date Package Delivered: YYYY MM DD

Date Work Completed: 2021 04 07

Ministry Use Only
Audit No. Z 188875
Received

 © Queen's Printer for Ontario, 2007

Well Owner's Copy

TOWN OF CALEDON
PLANNING
RECEIVED
Jul 12, 2024

Ontario

Ministry of the Environment

Measurements recorded in: ☒ Metric ☐ Imperial

Well Tag No. *(Place Sticker and/or Print Below)* **A121594**

TW6 30K-TW6

Well Record

Regulation 903 Ontario Water Resources Act

Page 1 of 1

Well Owner's Information

First Name	Last Name / Organization	E-mail Address	☐ Well Constructed by Well Owner
	Orb Property Corporation		

Mailing Address (Street Number/Name)	Municipality	Province	Postal Code	Telephone No. *(inc. area code)*
2121 Olde Baseline Road	Caledon	ON	L7E0K7	

Well Location

Address of Well Location (Street Number/Name)	Township	Lot	Concession
	Town of Caledon	Pt lot 9	5 WHS

County/District/Municipality	City/Town/Village	Province	Postal Code
Peel	Belfountain	Ontario	

UTM Coordinates	Zone	Easting	Northing	Municipal Plan and Sublot Number	Other
NAD 8 3	17	580008	4849203		

Overburden and Bedrock Materials/Abandonment Sealing Record *(see instructions on the back of this form)*

General Colour	Most Common Material	Other Materials	General Description	Depth (m/ft) From	Depth (m/ft) To
Red	Clay & stones			0	6.09
Gray	Clay & stones			6.09	12.49
White	limestone			12.49	27.12
Brown	limestone			27.12	29.26
Gray	limestone			29.26	31.08
Blue	shale			31.08	32.30

Annular Space

Depth Set at (m/ft) From	To	Type of Sealant Used *(Material and Type)*	Volume Placed *(m³/ft³)*
0	10	Bentonite Grout	.75

Method of Construction

☐ Cable Tool ☐ Diamond
☒ Rotary (Conventional) ☐ Jetting
☐ Rotary (Reverse) ☐ Driving
☐ Boring ☐ Digging
☐ Air percussion
☐ Other, *specify*

Well Use

☐ Public ☐ Commercial ☐ Not used
☐ Domestic ☐ Municipal ☐ Dewatering
☐ Livestock ☒ Test Hole ☐ Monitoring
☐ Irrigation ☐ Cooling & Air Conditioning
☐ Industrial
☐ Other, *specify*

Construction Record - Casing

Inside Diameter *(cm/in)*	Open Hole OR Material (Galvanized, Fibreglass, Concrete, Plastic, Steel)	Wall Thickness *(cm/in)*	Depth (m/ft) From	Depth (m/ft) To
15.9	steel	.48	+.48	13.41
15.4	open hole		13.41	32.30

Construction Record - Screen

Outside Diameter *(cm/in)*	Material (Plastic, Galvanized, Steel)	Slot No.	Depth (m/ft) From	Depth (m/ft) To

Status of Well

☐ Water Supply
☐ Replacement Well
☒ Test Hole
☐ Recharge Well
☐ Dewatering Well
☐ Observation and/or Monitoring Hole
☐ Alteration (Construction)
☐ Abandoned, Insufficient Supply
☐ Abandoned, Poor Water Quality
☐ Abandoned, other, *specify*
☐ Other, *specify*

Water Details

Water found at Depth (m/ft)	Kind of Water	Hole Diameter Depth From (m/ft)	Depth To (m/ft)	Diameter *(cm/in)*
29 (m/ft) ☐ Gas	☐ Fresh ☒ Untested ☐ Other, *specify*	0	13.41	22.8
(m/ft) ☐ Gas	☐ Fresh ☐ Untested ☐ Other, *specify*	13.41	32.30	15.4
(m/ft) ☐ Gas	☐ Fresh ☐ Untested ☐ Other, *specify*			

Results of Well Yield Testing

After test of well yield, water was:
☒ Clear and sand free
☐ Other, *specify*

If pumping discontinued, give reason:

Pump intake set at (m/ft): 26.2

Pumping rate (l/min / GPM): 18

Duration of pumping: 6 hrs + 0 min

Final water level end of pumping (m/ft): 20.57

If flowing give rate (l/min / GPM):

Recommended pump depth (m/ft): 26

Recommended pump rate (l/min / GPM): 18

Well production (l/min / GPM):

Disinfected? ☒ Yes ☐ No

Draw Down Time (min)	Draw Down Water Level (m/ft)	Recovery Time (min)	Recovery Water Level (m/ft)
Static Level	14.85	0	20.57
1	17.02	1	18.65
2	18.00	2	17.35
3	18.65	3	16.54
4		4	16.17
5	19.96	5	15.98
10	20.52	10	15.81
15	19.92	15	15.76
20	19.84	20	15.74
25	19.84	25	15.71
30	19.86	30	15.69
40	19.91	40	15.66
50	19.95	50	15.62
60	19.99	60	15.58

Map of Well Location

Please provide a map below following instructions on the back.

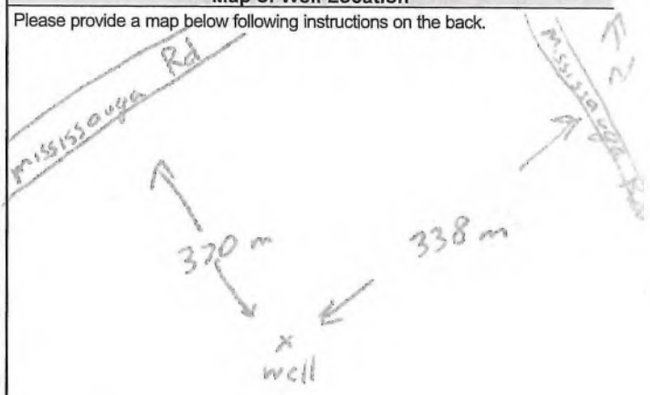

Comments:

Well Contractor and Well Technician Information

Business Name of Well Contractor	Well Contractor's Licence No.
Well Initiatives Ltd.	7212

Business Address (Street Number/Name)	Municipality
15 Townline Rd. Orangeville	

Province	Postal Code	Business E-mail Address
Ont	L9W3R4	info@wellinitiatives.com

Bus. Telephone No. *(inc. area code)*	Name of Well Technician (Last Name, First Name)
5196462269	Losch Kim

Well Technician's Licence No.	Signature of Technician and/or Contractor	Date Submitted
1927	Kim Losch	2024/07/12

Well owner's information package delivered ☐ Yes ☐ No

Date Package Delivered: YYYY MM DD

Date Work Completed: 2024/06/17

Ministry Use Only

Audit No: Z188873

Received

 © Queen's Printer for Ontario, 2007

Well Owner's Copy

TOWN OF CALEDON
PLANNING
RECEIVED
Jul 12, 2021

Ontario

Ministry of the Environment

Measurements recorded in: ■ Metric ☐ Imperial

Well Tag No. *(Place Sticker and/or Print Below)*
Tag #: A165389

MW1-14

Well Record

Regulation 903 Ontario Water Resources Act

Page 1 of 1

Well Owner's Information

First Name	Last Name / Organization	E-mail Address	☐ Well Constructed by Well Owner
	O.b Property Corporation		

Mailing Address (Street Number/Name)	Municipality	Province	Postal Code	Telephone No. *(inc. area code)*
2121 Olde Baseline Road	Caledon	ON	L7E 0K7	

Well Location

Address of Well Location (Street Number/Name)	Township	Lot	Concession
	Town of Caledon	Pt 9	5 WHS

County/District/Municipality	City/Town/Village	Province	Postal Code
Peel	Belfountain	Ontario	

UTM Coordinates	Zone	Easting	Northing	Municipal Plan and Sublot Number	Other
NAD 83	17	579811	4848771		

Overburden and Bedrock Materials/Abandonment Sealing Record *(see instructions on the back of this form)*

General Colour	Most Common Material	Other Materials	General Description	Depth (m/ft) From	Depth (m/ft) To
Brown	Clay			0	2.74
Grey	Clay & stones			2.74	7.62
Grey	Clay & silt			7.62	8.22
Grey	Clay & stones			8.22	11.88
				11.88	12.19

Annular Space

Depth Set at (m/ft) From	To	Type of Sealant Used (Material and Type)	Volume Placed (m^3/ft^3)
12.19	9.75	sand	0.011.5
9.75	7.92	Bentonite	0.03
7.92	5.48	sand	0.03
5.48	0	Bentonite	0.093

Method of Construction

☐ Cable Tool ☐ Diamond
☑ Rotary (Conventional) ☐ Jetting
☐ Rotary (Reverse) ☐ Driving
☐ Boring ☐ Digging
☐ Air percussion
☐ Other, *specify* _____

Well Use

☐ Public ☐ Commercial ☐ Not used
☐ Domestic ☐ Municipal ☐ Dewatering
☐ Livestock ☑ Test Hole ☑ Monitoring
☐ Irrigation ☐ Cooling & Air Conditioning
☐ Industrial
☐ Other, *specify* _____

Construction Record - Casing

Inside Diameter (cm/in)	Open Hole OR Material (Galvanized, Fibreglass, Concrete, Plastic, Steel)	Wall Thickness (cm/in)	Depth (m/ft) From	Depth (m/ft) To
3.5	plastic	.40	+.61	6.09
3.5	Plastic	.40	+.61	10.36

Construction Record - Screen

Outside Diameter (cm/in)	Material (Plastic, Galvanized, Steel)	Slot No.	Depth (m/ft) From	Depth (m/ft) To
4.1	plastic	10	6.09	7.62
4.1	Plastic	10	10.36	11.88

Status of Well

☐ Water Supply
☐ Replacement Well
☑ Test Hole
☐ Recharge Well
☐ Dewatering Well
☑ Observation and/or Monitoring Hole
☐ Alteration (Construction)
☐ Abandoned, Insufficient Supply
☐ Abandoned, Poor Water Quality
☐ Abandoned, other, *specify* _____
☐ Other, *specify* _____

Results of Well Yield Testing

After test of well yield, water was:
☐ Clear and sand free
☐ Other, *specify* _____

If pumping discontinued, give reason:

Pump intake set at *(m/ft)*

Pumping rate *(l/min / GPM)*

Duration of pumping _____ hrs + _____ min

Final water level end of pumping *(m/ft)*

If flowing give rate *(l/min / GPM)*

Recommended pump depth *(m/ft)*

Recommended pump rate *(l/min / GPM)*

Well production *(l/min / GPM)*

Disinfected?
☑ Yes ☐ No

	Draw Down Time (min)	Draw Down Water Level (m/ft)	Recovery Time (min)	Recovery Water Level (m/ft)
Static Level				
1			1	
2			2	
3			3	
4			4	
5			5	
10			10	
15			15	
20			20	
25			25	
30			30	
40			40	
50			50	
60			60	

Map of Well Location

Please provide a map below following instructions on the back.

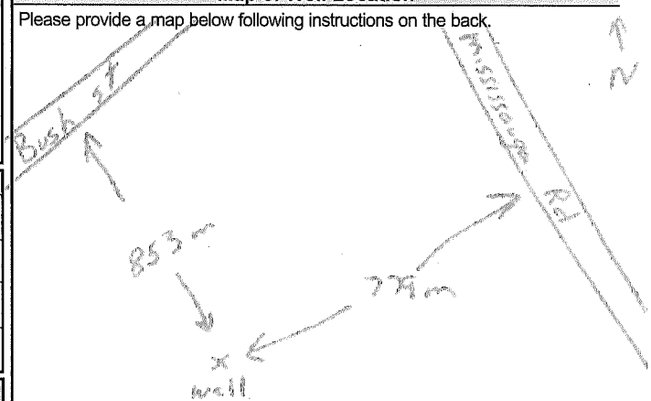

Comments:

Water Details

Water found at Depth (m/ft)	Kind of Water	
☐ Gas	☐ Fresh ☐ Untested	☐ Other, *specify* _____
☐ Gas	☐ Fresh ☐ Untested	☐ Other, *specify* _____
☐ Gas	☐ Fresh ☐ Untested	☐ Other, *specify* _____

Hole Diameter

Depth (m/ft) From	To	Diameter (cm/in)
0	12.19	15.4

Well Contractor and Well Technician Information

Business Name of Well Contractor	Well Contractor's Licence No.
Well Initiatives Ltd.	7211

Business Address (Street Number/Name)	Municipality
15 Townline Rd. Orangeville	

Province	Postal Code	Business E-mail Address
Ont	L9W3R4	info@wellinitiatives.com

Bus. Telephone No. *(inc. area code)*	Name of Well Technician (Last Name, First Name)
5198466288	Lasch, Kim

Well Technician's Licence No.	Signature of Technician and/or Contractor	Date Submitted
1912		2021/07/12

Well owner's information package delivered	Date Package Delivered	Date Work Completed
☐ Yes ☐ No		2021/07/12

Ministry Use Only
Audit No. Z 188871
Received

 © Queen's Printer for Ontario, 2007

Well Owner's Copy

TOWN OF CALEDON
PLANNING
RECEIVED
Jul 12, 2021
TW 7-16

Ontario — Ministry of the Environment and Climate Change

Well Tag#: A201495 (ow)

A201495

TW7

Well Record

Regulation 903 Ontario Water Resources Act

Page 1 of 1

Measurements recorded in: ☒ Metric ☐ ~~Imperial~~

Well Owner's Information

First Name	Last Name / Organization	E-mail Address	☐ Well Constructed by Well Owner
	ORA PROPERTY CORP		

Mailing Address (Street Number/Name)	Municipality	Province	Postal Code	Telephone No. (inc. area code)
2121 OLDE BASELINE ROAD	CALEDON	ON	L7C0K7	9058382000

Well Location

Address of Well Location (Street Number/Name)	Township	Lot	Concession
16800 SHAWS CREEK ROAD	TOWN OF CALEDON	9	5W

County/District/Municipality	City/Town/Village	Province	Postal Code
PEEL	BELFOUNTAIN	Ontario	L7K0E8

UTM Coordinates	Zone	Easting	Northing	Municipal Plan and Sublot Number	Other
NAD 83	17	580086	4849091		

Overburden and Bedrock Materials/Abandonment Sealing Record *(see instructions on the back of this form)*

General Colour	Most Common Material	Other Materials	General Description	Depth (m/ft) From	To
BROWN	SAND	GRAVEL, SILT + ROCKS		0	7.0
BROWN	GRAVEL	SAND		7.0	7.9
GREY	LIMESTONE			7.9	22.6
		TOTAL DEPTH - 74 FEET			

Annular Space

Depth Set at (m/ft) From	To	Type of Sealant Used (Material and Type)	Volume Placed (m³/ft³)
0	9.8	BENTONITE HOLE PLUG	0.3

Method of Construction

☐ Cable Tool ☐ Diamond
☒ Rotary (Conventional) ☐ Jetting
☐ Rotary (Reverse) ☐ Driving
☐ Boring ☐ Digging
☐ Air percussion
☐ Other, specify

Well Use

☐ Public ☐ Commercial ☐ Not used
☒ Domestic ☐ Municipal ☐ Dewatering
☐ Livestock ☒ Test Hole ☐ Monitoring
☐ Irrigation ☐ Cooling & Air Conditioning
☐ Industrial
☐ Other, specify

Construction Record - Casing

Inside Diameter (cm/in)	Open Hole OR Material (Galvanized, Fibreglass, Concrete, Plastic, Steel)	Wall Thickness (cm/in)	Depth (m/ft) From	To
16.0	STEEL	0.5	+0.6	9.8
15.6	OPEN HOLE	~~0.5~~	9.8	22.6

Construction Record - Screen

Outside Diameter (cm/in)	Material (Plastic, Galvanized, Steel)	Slot No.	Depth (m/ft) From	To

Status of Well

☒ Water Supply
☐ Replacement Well
☐ Test Hole
☐ Recharge Well
☐ Dewatering Well
☐ Observation and/or Monitoring Hole
☐ Alteration (Construction)
☐ Abandoned, Insufficient Supply
☐ Abandoned, Poor Water Quality
☐ Abandoned, other, specify
☐ Other, specify

Water Details

Water found at Depth (m/ft)	Gas	Kind of Water	
17.4	☐	☐ Fresh ☒ Untested	☐ Other, specify
21.3	☐	☐ Fresh ☒ Untested	☐ Other, specify
	☐	☐ Fresh ☐ Untested	☐ Other, specify

Hole Diameter

Depth (m/ft) From	To	Diameter (cm/in)
0	6.1	25.0
6.1	9.8	22.2
9.8	22.6	15.6

Results of Well Yield Testing

After test of well yield, water was:
☒ Clear and sand free
☐ Other, specify

If pumping discontinued, give reason:

Pump intake set at (m/ft): 18.3m / 60'

Pumping rate (l/min / GPM): 68.1LPM / 15USGPM

Duration of pumping: 2 hrs + 0 min

Final water level end of pumping (m/ft): 14.25m / 46'10"

If flowing give rate (l/min / GPM)

Recommended pump depth (m/ft): 18.3m / 60'

Recommended pump rate (l/min / GPM): 45.4LPM / 12 US GPM

Well production (l/min / GPM)

Disinfected? ☒ Yes ☐ No

Draw Down Time (min)	Water Level (m/ft)	Recovery Time (min)	Water Level (m/ft)
Static Level	13.30		14.24
1	13.84	1	13.64
2	13.94	2	13.50
3	14.04	3	13.46
4	14.07	4	13.44
5	14.07	5	13.42
10	14.14	10	13.36
15	14.17	15	13.33
20	14.17	20	13.30
25	14.20	25	13.30
30	14.20	30	
40	14.20	40	
50	14.24	50	
60	14.24	60	

Map of Well Location

Please provide a map below following instructions on the back.

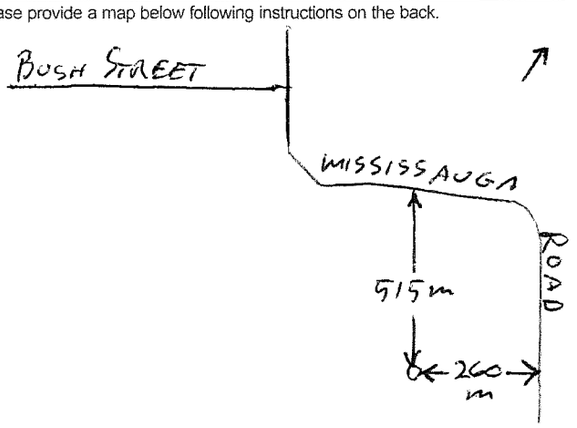

Comments:

Well Contractor and Well Technician Information

Business Name of Well Contractor	Well Contractor's Licence No.
WELL INITIATIVES	7211

Business Address (Street Number/Name)	Municipality
15 TECHNE LINE	BRAMPTON

Province	Postal Code	Business E-mail Address
ON	L6W3R4	info@wellinitiatives.com

Bus. Telephone No. (inc. area code)	Name of Well Technician (Last Name, First Name)
5198468289	BROADFOOT, JIM

Well Technician's Licence No.	Signature of Technician and/or Contractor	Date Submitted
6370	Jim Broadfoot	2016/03/05

Well owner's information package delivered	Date Package Delivered	Date Work Completed
☐ Yes ☒ No		2016/02/19

Ministry Use Only

Audit No: Z221731

Received

0506E (2014/11)

Ministry's Copy

© Queen's Printer for Ontario, 2014

TOWN OF CALEDON
PLANNING
RECEIVED
Jul 12, 2021
TWT-16

Ontario — Ministry of the Environment and Climate Change

Well Tag#: A201497 (low)

A201497

TW8

Well Record

Regulation 903 Ontario Water Resources Act

Page 1 of 1

Measurements recorded in: ☒ Metric ☐ Imperial

Well Owner's Information

First Name	Last Name / Organization	E-mail Address	☐ Well Constructed by Well Owner
	CRB PROPERTY CORP		

Mailing Address (Street Number/Name)	Municipality	Province	Postal Code	Telephone No. (inc. area code)
2121 OLDE BASELINE ROAD	CALEDON	ON	L7C0K7	9058380200

Well Location

Address of Well Location (Street Number/Name)	Township	Lot	Concession
16800 SHAWS CREEK ROAD	TOWN OF CALEDON	9	5W

County/District/Municipality	City/Town/Village	Province	Postal Code
PEEL	BELFOUNTAIN	Ontario	L7K0E8

UTM Coordinates	Zone	Easting	Northing	Municipal Plan and Sublot Number	Other
NAD 83	17	579801	4849157		

Overburden and Bedrock Materials/Abandonment Sealing Record *(see instructions on the back of this form)*

General Colour	Most Common Material	Other Materials	General Description	Depth (m/ft) From	Depth (m/ft) To
BROWN	SILTY CLAY	STONES		0	.6
BROWN	SILTY SAND	GRAVEL		.6	5.8
BROWN	SAND			5.8	7.9
BROWN	SILTY SAND			7.9	10.7
BROWN	SILTY SAND	GRAVEL		10.7	14.9
BROWN	SILTY SAND			14.9	18.9
GREY	LIMESTONE			18.9	34.4
GREEN	SHALE			34.4	34.7
		TOTAL DEPTH - 114 FEET			

Annular Space

Depth Set at (m/ft) From	To	Type of Sealant Used (Material and Type)	Volume Placed (m³/cf)
0	19.0	BENTONITE HOLEPLUG	.3
33.7	34.7	BENTONITE HOLEPLUG	.02

Method of Construction

☐ Cable Tool ☐ Diamond
☒ Rotary (Conventional) ☐ Jetting
☐ Rotary (Reverse) ☐ Driving
☐ Boring ☐ Digging
☐ Air percussion
☐ Other, specify

Well Use

☐ Public ☐ Commercial ☐ Not used
☒ Domestic ☐ Municipal ☐ Dewatering
☐ Livestock ☒ Test Hole ☐ Monitoring
☐ Irrigation ☐ Cooling & Air Conditioning
☐ Industrial
☐ Other, specify

Construction Record - Casing

Inside Diameter (cm/in)	Open Hole OR Material (Galvanized, Fibreglass, Concrete, Plastic, Steel)	Wall Thickness (cm/in)	Depth (m/ft) From	Depth (m/ft) To
16.0	STEEL	.5	+.6	19.5
15.6	OPEN HOLE		19.5	34.7

Construction Record - Screen

Outside Diameter (cm/in)	Material (Plastic, Galvanized, Steel)	Slot No.	Depth (m/ft) From	Depth (m/ft) To

Status of Well

☒ Water Supply
☐ Replacement Well
☐ Test Hole
☐ Recharge Well
☐ Dewatering Well
☐ Observation and/or Monitoring Hole
☐ Alteration (Construction)
☐ Abandoned, Insufficient Supply
☐ Abandoned, Poor Water Quality
☐ Abandoned, other, specify
☐ Other, specify

Water Details

Water found at Depth (m/ft)	Kind of Water	Other, specify
33	☐ Fresh ☒ Untested ☐ Gas	
	☐ Fresh ☐ Untested ☐ Gas	
	☐ Fresh ☐ Untested ☐ Gas	

Hole Diameter

Depth (m/ft) From	To	Diameter (cm/in)
0	6.4	25.0
6.4	19.5	22.2
19.5	34.7	15.6

Results of Well Yield Testing

After test of well yield, water was:
☒ Clear and sand free
☐ Other, specify

If pumping discontinued, give reason:

Pump intake set at (m/ft): 30.5m / 100'

Pumping rate (l/min / GPM): 11.4LPM / 3USGPM

Duration of pumping: 2 hrs + 0 min

Final water level end of pumping (m/ft): 25.73m

If flowing give rate (l/min / GPM):

Recommended pump depth (m/ft): 30.5m / 100'

Recommended pump rate (l/min / GPM): 11.4LPM / 3USGPM

Well production (l/min / GPM):

Disinfected? ☒ Yes ☐ No

Draw Down Time (min)	Draw Down Water Level (m/ft)	Recovery Time (min)	Recovery Water Level (m/ft)
Static Level	21.08		25.73
1	21.75	1	24.44
2	22.06	2	23.88
3	22.32	3	23.14
4	22.56	4	22.96
5	22.80	5	22.60
10	23.30	10	22.38
15	24.08	15	21.14
20	24.58	20	21.11
25	24.96	25	21.11
30	25.22	30	21.11
40	25.25	40	21.11
50	25.47	50	21.11
60	25.60	60	21.11

Map of Well Location

Please provide a map below following instructions on the back.

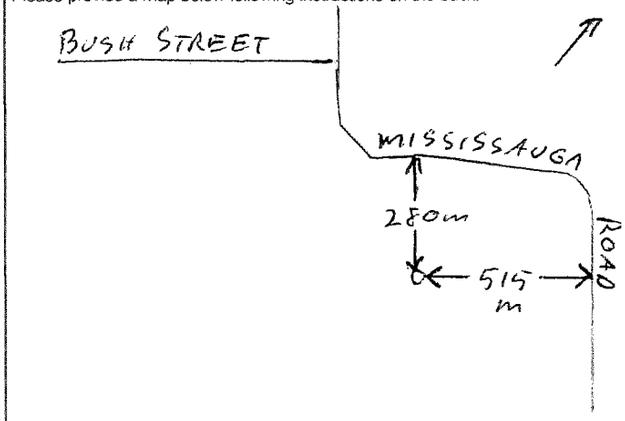

Comments:

Well Contractor and Well Technician Information

Business Name of Well Contractor	Well Contractor's Licence No.
WELL INITIATIVES	7221

Business Address (Street Number/Name)	Municipality
15 TOWNLINE	ORANGEVILLE

Province	Postal Code	Business E-mail Address
ON	L9W3R4	info@wellinitiatives.com

Bus. Telephone No. (inc. area code)	Name of Well Technician (Last Name, First Name)
5198468289	BRADFOOT JIM

Well Technician's Licence No.	Signature of Technician and/or Contractor	Date Submitted
0377	Jim Bradfoot	2016 03 05

Well owner's information package delivered: ☐ Yes ☒ No

Date Package Delivered:

Date Work Completed: 2016 12 23

Ministry Use Only

Audit No. Z221732

Received

0506E (2014/11) — Ministry's Copy

© Queen's Printer for Ontario, 2014

TOWN OF CALEDON
PLANNING
RECEIVED
Jul 12, 2021
TW 9-16

Ontario — Ministry of the Environment and Climate Change

Well Tag#: A201496 (ow)

A201496

TW 9

Well Record

Regulation 903 Ontario Water Resources Act

Page 1 of 1

Measurements recorded in: [X] Metric [ ] ~~Imperial~~

Well Owner's Information

First Name	Last Name / Organization	E-mail Address	Well Constructed by Well Owner
GRB	PROPERTY CORP		[ ]

Mailing Address (Street Number/Name)	Municipality	Province	Postal Code	Telephone No. (inc. area code)
2121 OLDE BASELINE ROAD	CALEDON	ON	L7C0K7	9058380200

Well Location

Address of Well Location (Street Number/Name)	Township	Lot	Concession
16800 SHAWS CREEK ROAD	TOWN OF CALEDON	9	5W

County/District/Municipality	City/Town/Village	Province	Postal Code
PEEL	BELFOUNTAIN	Ontario	L7K0E8

UTM Coordinates	Zone	Easting	Northing	Municipal Plan and Sublot Number	Other
NAD 83	17	594594	4849006		

Overburden and Bedrock Materials/Abandonment Sealing Record *(see instructions on the back of this form)*

General Colour	Most Common Material	Other Materials	General Description	Depth (m/ft) From	To
BROWN	SILTY CLAY	STONES		0	.6
BROWN	SILTY SAND			.6	3.7
BROWN	GRAVEL	SAND & SILT		3.7	9.8
GREY	LIMESTONE			9.8	35.1
GREEN	SHALE			35.1	35.4
		TOTAL DEPTH - 116 FEET			

Annular Space

Depth Set at (m/ft) From	To	Type of Sealant Used (Material and Type)	Volume Placed (m³/ft³)
0	11.0	BENTONITE HOLEPLUG	.24
34.1	35.4	CUTTINGS	

Method of Construction

[ ] Cable Tool [ ] Diamond
[X] Rotary (Conventional) [ ] Jetting
[ ] Rotary (Reverse) [ ] Driving
[ ] Boring [ ] Digging
[ ] Air percussion
[ ] Other, specify

Well Use

[ ] Public [ ] Commercial [ ] Not used
[X] Domestic [ ] Municipal [ ] Dewatering
[ ] Livestock [X] Test Hole [ ] Monitoring
[ ] Irrigation [ ] Cooling & Air Conditioning
[ ] Industrial
[ ] Other, specify

Construction Record - Casing

Inside Diameter (cm/in)	Open Hole OR Material (Galvanized, Fibreglass, Concrete, Plastic, Steel)	Wall Thickness (cm/in)	Depth (m/ft) From	To
16.0	STEEL	.5	+.6	11.6
12.8	PERFORATED PLASTIC	.6	10.1	34.1
15.6	OPEN HOLE		34.1	35.4

Construction Record - Screen

Outside Diameter (cm/in)	Material (Plastic, Galvanized, Steel)	Slot No.	Depth (m/ft) From	To

Status of Well

[X] Water Supply
[ ] Replacement Well
[ ] Test Hole
[ ] Recharge Well
[ ] Dewatering Well
[ ] Observation and/or Monitoring Hole
[ ] Alteration (Construction)
[ ] Abandoned, Insufficient Supply
[ ] Abandoned, Poor Water Quality
[ ] Abandoned, other, specify
[ ] Other, specify

Water Details

Water found at Depth (m/ft)	Kind of Water	Gas	Other, specify
	[ ] Fresh [ ] Untested	[ ]	
	[ ] Fresh [ ] Untested	[ ]	
	[ ] Fresh [ ] Untested	[ ]	

Hole Diameter

Depth (m/ft) From	To	Diameter (cm/in)
0	6.4	25.0
6.4	11.6	22.2
11.6	35.4	15.6

Well Contractor and Well Technician Information

Business Name of Well Contractor	Well Contractor's Licence No.
WELL INITIATIVES	7221

Business Address (Street Number/Name)	Municipality
15 TOWNLINE	ORANGEVILLE

Province	Postal Code	Business E-mail Address
ON	L9W3R4	info@wellinitiatives.com

Bus. Telephone No. (inc. area code)	Name of Well Technician (Last Name, First Name)
5198462887	BROADFOOT JIM

Well Technician's Licence No.	Signature of Technician and/or Contractor	Date Submitted
0370	Jim Broadfoot	2016 03 05

Results of Well Yield Testing

After test of well yield, water was:
[X] Clear and sand free
[ ] Other, specify

If pumping discontinued, give reason:

Pump intake set at (m/ft): 22.9m / 75'

Pumping rate (l/min / GPM): 56.8LPM / 15USGPM

Duration of pumping: 2 hrs + 0 min

Final water level end of pumping (m/ft): 16.84m

If flowing give rate (l/min / GPM):

Recommended pump depth (m/ft): 22.9m / 75'

Recommended pump rate (l/min / GPM): 45.4LPM / 12USGPM

Well production (l/min / GPM):

Disinfected? [X] Yes [ ] No

Draw Down Time (min)	Water Level (m/ft)	Recovery Time (min)	Water Level (m/ft)
Static Level	14.70		16.84
1	15.38	1	15.91
2	15.60	2	15.71
3	15.86	3	15.56
4	15.98	4	15.47
5	16.06	5	15.40
10	16.31	10	15.23
15	16.42	15	15.16
20	16.49	20	15.12
25	16.53	25	15.09
30	16.57	30	15.07
40	16.62	40	15.03
50	16.66	50	15.00
60	16.70	60	14.98

Map of Well Location

Please provide a map below following instructions on the back.

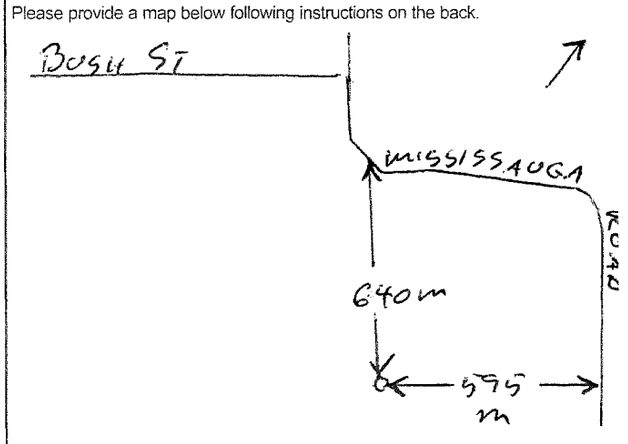

Comments:
VOID FROM 12.8M TO 14.0m
PLASTIC LINER INSTALLED

Well owner's information package delivered: [ ] Yes [X] No

Date Package Delivered:

Date Work Completed: 2016 02 25

Ministry Use Only

Audit No. Z221733

Received

© Queen's Printer for Ontario, 2014

TOWN OF CALEDON
PLANNING
RECEIVED
Jul 12, 2021

TW 10 - 16

Ontario — Ministry of the Environment and Climate Change

Measurements recorded in: ☒ Metric ☐ Imperial

Well Tag#: A201493 (low)

A201493

TW 10

Well Record

Regulation 903 Ontario Water Resources Act

Page 1 of 1

Well Owner's Information

First Name	Last Name / Organization	E-mail Address	☐ Well Constructed by Well Owner
	ORB PROPERTY CORP		

Mailing Address (Street Number/Name)	Municipality	Province	Postal Code	Telephone No. (inc. area code)
2121 OLDE BASELINE ROAD	CALEDON	ON	L7C0K7	5058380200

Well Location

Address of Well Location (Street Number/Name)	Township	Lot	Concession
16800 SHAWS CREEK ROAD	TOWN OF CALEDON	9	5W

County/District/Municipality	City/Town/Village	Province	Postal Code
PEEL	BELFOUNTAIN	Ontario	L7K0E8

UTM Coordinates	Zone	Easting	Northing	Municipal Plan and Sublot Number	Other
NAD 83	17	579789	4848906		

Overburden and Bedrock Materials/Abandonment Sealing Record *(see instructions on the back of this form)*

General Colour	Most Common Material	Other Materials	General Description	Depth (m/ft) From	Depth (m/ft) To
BROWN	SILTY SAND	STONES		0	.6
BROWN	SILTY SAND			.6	3.7
BROWN	GRAVEL+SAND	SILT		3.7	9.4
BROWN	SILTY SAND			9.4	12.8
BROWN	SAND			12.8	14.9
GREY	LIMESTONE			14.9	30.2
			TOTAL DEPTH - 99 FEET		

Annular Space

Depth Set at (m/ft) From	To	Type of Sealant Used (Material and Type)	Volume Placed (m³/ft³)
0	11.0	BENTONITE HOLEPLUG	.24

Method of Construction

☐ Cable Tool ☐ Diamond
☒ Rotary (Conventional) ☐ Jetting
☐ Rotary (Reverse) ☐ Driving
☐ Boring ☐ Digging
☐ Air percussion
☐ Other, specify

Well Use

☐ Public ☐ Commercial ☐ Not used
☒ Domestic ☐ Municipal ☐ Dewatering
☐ Livestock ☒ Test Hole ☐ Monitoring
☐ Irrigation ☐ Cooling & Air Conditioning
☐ Industrial
☐ Other, specify

Construction Record - Casing

Inside Diameter (cm/in)	Open Hole OR Material (Galvanized, Fibreglass, Concrete, Plastic, Steel)	Wall Thickness (cm/in)	Depth (m/ft) From	Depth (m/ft) To
16.0	STEEL	.5	+.78	16.8
15.6	OPEN HOLE		16.8	30.2

Construction Record - Screen

Outside Diameter (cm/in)	Material (Plastic, Galvanized, Steel)	Slot No.	Depth (m/ft) From	Depth (m/ft) To
			+	

Status of Well

☒ Water Supply
☐ Replacement Well
☐ Test Hole
☐ Recharge Well
☐ Dewatering Well
☐ Observation and/or Monitoring Hole
☐ Alteration (Construction)
☐ Abandoned, Insufficient Supply
☐ Abandoned, Poor Water Quality
☐ Abandoned, other, specify
☐ Other, specify

Water Details

Water found at Depth (m/ft)	Kind of Water	
25.0	☐ Gas	☐ Fresh ☒ Untested ☐ Other, specify
26.8	☐ Gas	☐ Fresh ☒ Untested ☐ Other, specify
29.0	☐ Gas	☐ Fresh ☒ Untested ☐ Other, specify

Hole Diameter

Depth (m/ft) From	To	Diameter (cm/in)
0	6.4	29.0
6.4	16.8	22.2
16.8	30.2	15.6

Results of Well Yield Testing

After test of well yield, water was:
☒ Clear and sand free
☐ Other, specify

If pumping discontinued, give reason:

Pump intake set at (m/ft): 22.9m/75'

Pumping rate (l/min / GPM): 113.6LPM/30USGPM

Duration of pumping: 2 hrs + 0 min

Final water level end of pumping (m/ft): 16.54

If flowing give rate (l/min / GPM)

Recommended pump depth (m/ft): 22.9m/75'

Recommended pump rate (l/min / GPM): 45.4LPM/12USGPM

Well production (l/min / GPM)

Disinfected? ☒ Yes ☐ No

Draw Down Time (min)	Draw Down Water Level (m/ft)	Recovery Time (min)	Recovery Water Level (m/ft)
Static Level	15.07		16.54
1	15.50	1	15.17
2	15.84	2	15.14
3	15.99	3	15.13
4	16.10	4	15.13
5	16.15	5	15.13
10	16.26	10	15.12
15	16.33	15	15.12
20	16.38	20	15.12
25	16.40	25	15.12
30	16.42	30	15.11
40	16.44	40	15.11
50	16.45	50	15.10
60	16.46	60	15.10

Map of Well Location

Please provide a map below following instructions on the back.

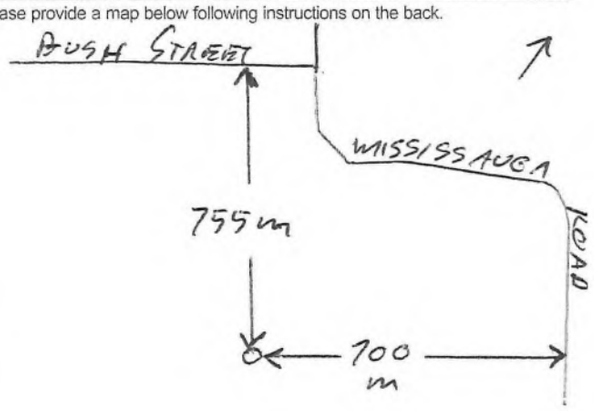

Comments:

Well Contractor and Well Technician Information

Business Name of Well Contractor	Well Contractor's Licence No.
WELL INITIATIVES	7221

Business Address (Street Number/Name)	Municipality
15 TOWNLINE	ORANGEVILLE

Province	Postal Code	Business E-mail Address
ON	L9W3R4	info@wellinitiatives.com

Bus. Telephone No. (inc. area code)	Name of Well Technician (Last Name, First Name)
5198468289	BROADFOOT JIM

Well Technician's Licence No.	Signature of Technician and/or Contractor	Date Submitted
0370	Jim Broadfoot	20160305

Well owner's information package delivered	Date Package Delivered	Date Work Completed
☐ Yes ☒ No		20160225

Ministry Use Only

Audit No Z221734

Received

Ministry's Copy

© Queen's Printer for Ontario, 2014

TOWN OF CALEDON
PLANNING
RECEIVED
Jul 12, 2021
TWII-16

Ontario
Ministry of the Environment and Climate Change

Measurements recorded in: ☒ Metric ☐ ~~Imperial~~

Well Tag#: A201494 (ow)

A201494

TW 11

Well Record

Regulation 903 Ontario Water Resources Act

Page 1 of 1

Well Owner's Information

First Name	Last Name / Organization	E-mail Address	☐ Well Constructed by Well Owner
ORB	PROPERTY CORP		

Mailing Address (Street Number/Name)	Municipality	Province	Postal Code	Telephone No. (inc. area code)
2121 OLDE BASELINE ROAD	CALEDON	ON	L7C0K7	9058380200

Well Location

Address of Well Location (Street Number/Name)	Township	Lot	Concession
16800 SHAWS CREEK ROAD	TOWN OF CALEDON	9	5W

County/District/Municipality	City/Town/Village	Province	Postal Code
PEEL	BELFOUNTAIN	Ontario	L7K0E8

UTM Coordinates	Zone	Easting	Northing	Municipal Plan and Sublot Number	Other
NAD 83	17	579692	4849093		

Overburden and Bedrock Materials/Abandonment Sealing Record *(see instructions on the back of this form)*

General Colour	Most Common Material	Other Materials	General Description	Depth (m/ft) From	To
BROWN	SILTY SAND	STONES		0	.6
BROWN	SILTY SAND			.6	3.7
BROWN	GRAVEL	SAND	SILT	3.7	5.4
BROWN	SILTY SAND			9.4	12.8
BROWN	SAND			12.8	14.9
GREY	LIMESTONE			14.9	30.2

TOTAL DEPTH - 104 FEET

Annular Space

Depth Set at (m/ft) From	To	Type of Sealant Used (Material and Type)	Volume Placed (m^3/~~ft~~)
0	11.0	BENTONITE HOLEPLUG	.24

Method of Construction

☐ Cable Tool ☐ Diamond
☒ Rotary (Conventional) ☐ Jetting
☐ Rotary (Reverse) ☐ Driving
☐ Boring ☐ Digging
☐ Air percussion
☐ Other, specify

Well Use

☐ Public ☐ Commercial ☐ Not used
☒ Domestic ☐ Municipal ☐ Dewatering
☐ Livestock ☒ Test Hole ☐ Monitoring
☐ Irrigation ☐ Cooling & Air Conditioning
☐ Industrial
☐ Other, specify

Construction Record - Casing

Inside Diameter (cm/~~in~~)	Open Hole OR Material (Galvanized, Fibreglass, Concrete, Plastic, Steel)	Wall Thickness (cm/~~in~~)	Depth (m/~~ft~~) From	To
16.0	STEEL	.5	+.8	20.7
15.6	OPEN HOLE		20.7	30.2

Construction Record - Screen

Outside Diameter (cm/in)	Material (Plastic, Galvanized, Steel)	Slot No.	Depth (m/ft) From	To

Status of Well

☒ Water Supply
☐ Replacement Well
☐ Test Hole
☐ Recharge Well
☐ Dewatering Well
☐ Observation and/or Monitoring Hole
☐ Alteration (Construction)
☐ Abandoned, Insufficient Supply
☐ Abandoned, Poor Water Quality
☐ Abandoned, other, specify
☐ Other, specify

Water Details

Water found at Depth	Kind of Water	Hole Diameter Depth From	To	Diameter (cm/in)
24-30 (m/~~ft~~)	☐ Fresh ☒ Untested ☐ Gas ☐ Other, specify	0	6.4	25.0
(m/ft)	☐ Fresh ☐ Untested ☐ Gas ☐ Other, specify	6.4	20.7	22.2
(m/ft)	☐ Fresh ☐ Untested ☐ Gas ☐ Other, specify	20.7	30.2	15.6

Results of Well Yield Testing

After test of well yield, water was:
☒ Clear and sand free
☐ Other, specify

If pumping discontinued, give reason:

Pump intake set at (m/ft): 22.5m / 75'

Pumping rate (l/min / GPM): 56.8LPM / 150USGPM

Duration of pumping: 2 hrs + 0 min

Final water level end of pumping (m/~~ft~~): 21.25

If flowing give rate (l/min / GPM):

Recommended pump depth (m/ft): 22.9m / 75'

Recommended pump rate (l/min / GPM): 45.4LPM / 12USGPM

Well production (l/min / GPM):

Disinfected? ☒ Yes ☐ No

	Draw Down Time (min)	Draw Down Water Level (m/~~ft~~)	Recovery Time (min)	Recovery Water Level (m/~~ft~~)
Static Level		20.88		21.25
1	1	21.21	1	20.86
2	2	21.23	2	20.89
3	3	21.24	3	20.89
4	4	21.24	4	20.89
5	5	21.24	5	20.89
10	10	21.24	10	20.88
15	15	21.25	15	20.87
20	20	21.25	20	20.87
25	25	21.25	25	20.87
30	30	21.25	30	20.87
40	40	21.25	40	20.87
50	50	21.25	50	20.87
60	60	21.25	60	20.87

Map of Well Location

Please provide a map below following instructions on the back.

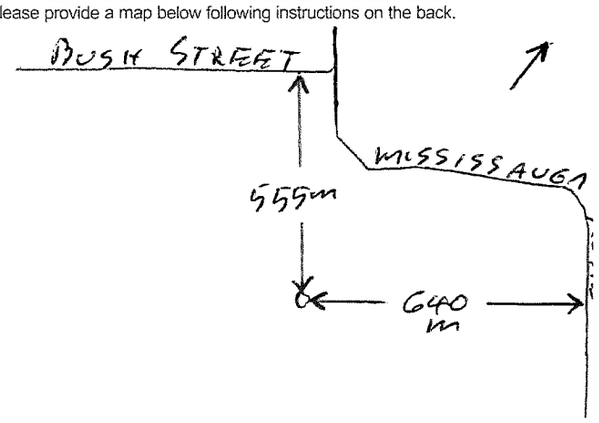

Well Contractor and Well Technician Information

Business Name of Well Contractor	Well Contractor's Licence No.
WELL INITIATIVES	7221

Business Address (Street Number/Name)	Municipality
15 TOWNLINE	ORANGEVILLE

Province	Postal Code	Business E-mail Address
ON	L9W3R4	info@wellinitiatives.com

Bus. Telephone No. (inc. area code)	Name of Well Technician (Last Name, First Name)
5198468289	BROADFOOT JIM

Well Technician's Licence No.	Signature of Technician and/or Contractor	Date Submitted
0370	Jim Broadfoot	20160305

Comments:

Well owner's information package delivered: ☐ Yes ☒ No

Date Package Delivered:

Date Work Completed: 20160226

Ministry Use Only

Audit No. Z221735

Revised

0506E (2014/11)

Ministry's Copy

© Queen's Printer for Ontario, 2014

TOWN OF CALEDON
PLANNING
RECEIVED
Jul 12, 2021

Ontario — Ministry of the Environment and Climate Change

TW12-16

Measurements recorded in: ☒ Metric ☐ Imperial

Well Tag#: A201492 ow)

A201492

TW12 **Well Record**

Regulation 903 Ontario Water Resources Act

Page 1 of 1

Well Owner's Information

First Name	Last Name / Organization	E-mail Address	☐ Well Constructed by Well Owner
ORB	PROPERTY CORP		

Mailing Address (Street Number/Name)	Municipality	Province	Postal Code	Telephone No. (inc. area code)
2121 OLD BASELINE ROAD	CALEDON	ON	L7C0K7	9058380266

Well Location

Address of Well Location (Street Number/Name)	Township	Lot	Concession
16800 SHAWS CREEK ROAD	TOWN OF CALEDON	9	5W

County/District/Municipality	City/Town/Village	Province	Postal Code
PEEL	BELFOUNTAIN	Ontario	L7K0E8

UTM Coordinates	Zone	Easting	Northing	Municipal Plan and Sublot Number	Other
NAD 83	17	579469	4848667		

Overburden and Bedrock Materials/Abandonment Sealing Record *(see instructions on the back of this form)*

General Colour	Most Common Material	Other Materials	General Description	Depth (m/ft) From	To
BROWN	SILTY CLAY			0	.6
BRown	SILTY SAND	GRAVEL		.6	2.7
BRown	SAND	GRAVEL		2.7	7.6
BROWN	SILTY SAND			7.6	11.6
BROWN	SILTY SAND	GRAVEL		11.6	17.4
BROWN	SILTY SAND	GREY CLAY		17.4	22.9
BROWN GREY	LIMESTONE		INTERMIXED	22.9	36.3
GRY	SHALE/LIMESTONE			36.3	36.6
		TOTAL DEPTH - 120 FEET			

Annular Space

Depth Set at (m/ft) From	To	Type of Sealant Used (Material and Type)	Volume Placed (m³/ft³)
0	11	BENTONITE HOLEPLUG	.24

Method of Construction

☐ Cable Tool ☐ Diamond
☒ Rotary (Conventional) ☐ Jetting
☐ Rotary (Reverse) ☐ Driving
☐ Boring ☐ Digging
☐ Air percussion
☐ Other, *specify*

Well Use

☐ Public ☐ Commercial ☐ Not used
☒ Domestic ☐ Municipal ☐ Dewatering
☐ Livestock ☒ Test Hole ☐ Monitoring
☐ Irrigation ☐ Cooling & Air Conditioning
☐ Industrial
☐ Other, *specify*

Construction Record - Casing

Inside Diameter (cm/in)	Open Hole OR Material (Galvanized, Fibreglass, Concrete, Plastic, Steel)	Wall Thickness (cm/in)	Depth (m/ft) From	To
16.0	STEEL	.5	+.8	23.6
15.6	OPEN HOLE		23.6	36.6

Construction Record - Screen

Outside Diameter (cm/in)	Material (Plastic, Galvanized, Steel)	Slot No.	Depth (m/ft) From	To

Status of Well

☒ Water Supply
☐ Replacement Well
☐ Test Hole
☐ Recharge Well
☐ Dewatering Well
☐ Observation and/or Monitoring Hole
☐ Alteration (Construction)
☐ Abandoned, Insufficient Supply
☐ Abandoned, Poor Water Quality
☐ Abandoned, other, *specify*
☐ Other, *specify*

Water Details

Water found at Depth (m/ft)	Kind of Water	
33.0	☐ Gas	☐ Fresh ☒ Untested ☐ Other, *specify*
35.4	☐ Gas	☐ Fresh ☒ Untested ☐ Other, *specify*
	☐ Gas	☐ Fresh ☐ Untested ☐ Other, *specify*

Hole Diameter

Depth (m/ft) From	To	Diameter (cm/in)
0	6.4	25.0
6.4	23.6	22.2
23.6	36.6	15.6

Results of Well Yield Testing

After test of well yield, water was:
☒ Clear and sand free
☐ Other, *specify*

If pumping discontinued, give reason:

Pump intake set at (m/ft): 30.5m/100'

Pumping rate (l/min / GPM): 45.42LPM/12USGPM

Duration of pumping: 2 hrs + 0 min

Final water level end of pumping (m/ft): 27.72

If flowing give rate (l/min / GPM):

Recommended pump depth (m/ft): 30.5m/100'

Recommended pump rate (l/min / GPM): 45.4LPM/12USGPM

Well production (l/min / GPM):

Disinfected? ☒ Yes ☐ No

Draw Down Time (min)	Water Level (m/ft)	Recovery Time (min)	Water Level (m/ft)
Static Level	14.90		27.72
1	17.70	1	23.70
2	19.28	2	21.67
3	19.86	3	20.23
4	20.08	4	19.56
5	20.27	5	19.03
10	20.52	10	17.47
15	26.91	15	16.70
20	27.20	20	16.25
25	27.25	25	15.99
30	27.40	30	15.79
40	27.52	40	15.47
50	27.56	50	15.21
60	27.58	60	15.08

Map of Well Location

Please provide a map below following instructions on the back.

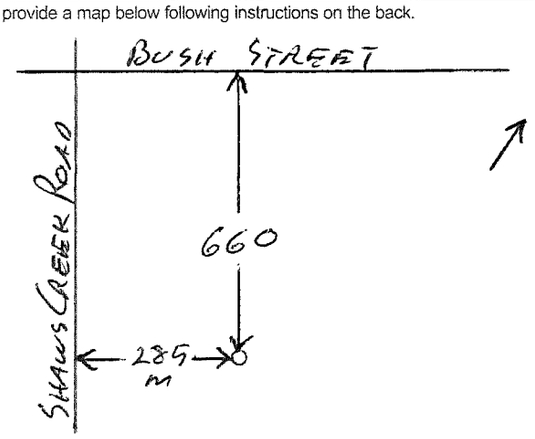

Comments:

Well Contractor and Well Technician Information

Business Name of Well Contractor	Well Contractor's Licence No.
WELL INITIATIVES	7221

Business Address (Street Number/Name)	Municipality
15 TOWNLINE	ORANGEVILLE

Province	Postal Code	Business E-mail Address
ON	L9W3R4	info@wellinitiatives.com

Bus. Telephone No. (inc. area code)	Name of Well Technician (Last Name, First Name)
5198468259	BROADFOOT Jim

Well Technician's Licence No.	Signature of Technician and/or Contractor	Date Submitted
0370	Jim Broadfoot	20160305

Well owner's information package delivered	Date Package Delivered	Date Work Completed
☐ Yes ☒ No		20160301

Ministry Use Only

Audit No. Z 221736

Received

© Queen's Printer for Ontario, 2014

TOWN OF CALEDON
PLANNING
RECEIVED
Jul 12, 2021

Ontario Ministry of the Environment

Measurements recorded in: ☐ Metric ☒ Imperial

Well (see Instructions Below) **A 075156**

Well Record

Regulation 903 Ontario Water Resources Act

Page 1 of 1

Well Owner's Information

First Name	Last Name / Organization	E-mail Address	☐ Well Constructed by Well Owner
	Orb Properties Corp		

Mailing Address (Street Number/Name)	Municipality	Province	Postal Code	Telephone No. (inc. area code)

Well Location

Address of Well Location (Street Number/Name)	Township	Lot	Concession
Shaws Creek Rd	Caledon	9	5 HSW

County/District/Municipality	City/Town/Village	Province	Postal Code
Peel	Belfountain	Ontario	

UTM Coordinates	Zone	Easting	Northing	Municipal Plan and Sublot Number	Other
NAD 83	17	579080	4848673		

Overburden and Bedrock Materials/Abandonment Sealing Record *(see instructions on the back of this form)*

General Colour	Most Common Material	Other Materials	General Description	Depth (m/ft) From	Depth (m/ft) To
Brown	Topsoil			0	1
Brown	Sand	gravel / Stones		1	43
Brown	fine Sand			43	59
Brown	Sand	gravel		59	65
Brown	clay	gravel		65	72
Grey	Limestone			72	112

Annular Space

Depth Set at (m/ft) From	To	Type of Sealant Used (Material and Type)	Volume Placed (m³/ft³)
0	73	Bentonite Grout	

Method of Construction

☐ Cable Tool ☒ Rotary (Conventional) ☐ Rotary (Reverse) ☐ Boring ☐ Air percussion ☐ Other, specify
☐ Diamond ☐ Jetting ☐ Driving ☐ Digging

Well Use

☐ Public ☐ Domestic ☐ Livestock ☐ Irrigation ☐ Industrial ☐ Other, specify
☐ Commercial ☐ Municipal ☒ Test Hole ☐ Cooling & Air Conditioning
☐ Not used ☐ Dewatering ☐ Monitoring

Construction Record - Casing

Inside Diameter (cm/in)	Open Hole OR Material (Galvanized, Fibreglass, Concrete, Plastic, Steel)	Wall Thickness (cm/in)	Depth (m/ft) From	Depth (m/ft) To
6 1/4	Steel	.188	0	73

Status of Well

☐ Water Supply ☐ Replacement Well ☒ Test Hole ☐ Recharge Well ☐ Dewatering Well ☐ Observation and/or Monitoring Hole ☐ Alteration (Construction) ☐ Abandoned, Insufficient Supply ☐ Abandoned, Poor Water Quality ☐ Abandoned, other, specify ☐ Other, specify

Construction Record - Screen

Outside Diameter (cm/in)	Material (Plastic, Galvanized, Steel)	Slot No.	Depth (m/ft) From	Depth (m/ft) To

Water Details

Water found at Depth (m/ft)	Gas	Kind of Water	Other, specify
93	☐	☐ Fresh ☒ Untested	
97	☐	☐ Fresh ☒ Untested	
102	☐	☐ Fresh ☒ Untested	

Hole Diameter

Depth (m/ft) From	To	Diameter (cm/in)
0	73	8 1/2
73	112	6 1/8

Results of Well Yield Testing

After test of well yield, water was: ☒ Clear and sand free ☐ Other, specify

If pumping discontinued, give reason:

Pump intake set at (m/ft): 100

Pumping rate (l/min / GPM): 45

Duration of pumping: 2 hrs + 0 min

Final water level end of pumping (m/ft): 92.3

If flowing give rate (l/min-/ GPM):

Recommended pump depth (m/ft):

Recommended pump rate (l/min / GPM): 40

Well production (l/min / GPM):

Disinfected? ☒ Yes ☐ No

Draw Down Time (min)	Draw Down Water Level (m/ft)	Recovery Time (min)	Recovery Water Level (m/ft)
Static Level	52.8		92.3
1	64.8	1	82.4
2	68.7	2	78.8
3	71.6	3	75.9
4	73.8	4	73.6
5	75.6	5	71.7
10	81.4	10	65.3
15	84.6	15	61.8
20	86.4	20	59.6
25	87.7	25	58.2
30	88.4	30	57.2
40	89.4	40	55.8
50	91.1	50	55.0
60	91.6	60	54.4

Map of Well Location

Please provide a map below following instructions on the back.

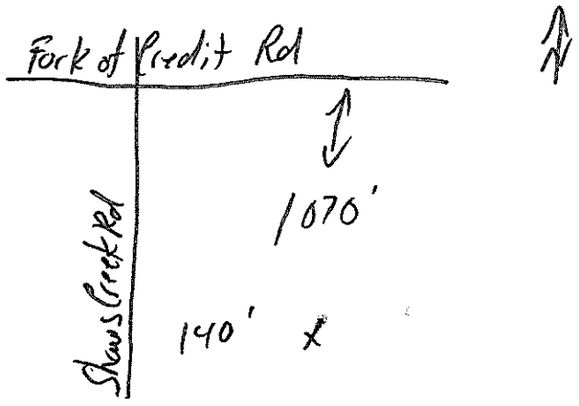

Comments:

Well Contractor and Well Technician Information

Business Name of Well Contractor	Well Contractor's Licence No.
FRED CONSTABLE & SON LTD	1663

Business Address (Street Number/Name)	Municipality	Province	Postal Code	Business E-mail Address
3519 5TH LINE		BRADFORD ON.	L3Z 2A4	

Bus. Telephone No. (inc. area code)	Name of Well Technician (Last Name, First Name)
	Thompson Steve

Well Technician's Licence No.	Signature of Technician and/or Contractor	Date Submitted
2120		2009/11/25

Well owner's information package delivered: ☐ Yes ☒ No

Date Package Delivered: Y Y Y Y M M D D

Date Work Completed: 2009/11/20

Ministry Use Only

Audit No. Z 94130

Received MAR 01 2010

TOWN OF CALEDON
PLANNING
RECEIVED
Jul 12, 2021

Terraprobe

LOG OF BOREHOLE PW-1

PROJECT: Proposed Subdivision
LOCATION: Belfountain
CLIENT: Enterac

DATE: May 27 to June 2, 1988
EQUIPMENT: -
ELEVATION DATUM: Geodetic

STRATIGRAPHY			SAMPLES				HYDRAULIC CONDUCTIVITY K, CM/SEC 1x10 1x10 1x10 1x10 / WATER CONTENT PERCENT 10 20 30 40	ELEV. DEPTH	DETAILS OF INSTALLATION
ELEV. DEPTH	DESCRIPTION	STRAT. PLOT	NUMBER	TYPE	'N' VALUES	RECOVERY			PW-1
415.0	GROUND SURFACE								
412.3 / 2.7	CLAY AND BOULDERS								
403.8 / 11.2	SAND AND GRAVEL, some boulders (OUTWASH)							410, 405	
397.6 / 17.4	SAND, GRAVEL, BOULDERS							400	
389.4 / 25.6	SAND AND GRAVEL							395, 390	
386.8 / 28.2	CLAY AND GRAVEL (TILL)								
	Continued.....							385	

NOTES:

Field Supervisor: _____
Drawn by: _____
Checked by: _____

TOWN OF CALEDON
PLANNING
RECEIVED
Jul 12, 2021

Terraprobe

LOG OF BOREHOLE PW-1 CON'T

PROJECT: Proposed Sudivision
LOCATION: Belfountain
CLIENT: Enterac

DATE: May 27 to June 2, 1988
EQUIPMENT: -
ELEVATION DATUM: Geodetic

STRATIGRAPHY			SAMPLES				HYDRAULIC CONDUCTIVITY K, CM/SEC 1x10 1x10 1x10 1x10 / WATER CONTENT PERCENT 10 20 30 40	ELEV. DEPTH	DETAILS OF INSTALLATION
ELEV. DEPTH	DESCRIPTION	STRAT. PLOT	NUMBER	TYPE	'N' VALUES	RECOVERY			
385.8	WEATHERED ROCK								
29.2	DOLOSTONE								
380.9									
34.1	End of Borehole							380	

NOTES: Water found at 29.2m

Field Supervisor: _____
Drawn by: _____
Checked by: _____

TOWN OF CALEDON
PLANNING
RECEIVED
Jul 12, 2021

Terraprobe

LOG OF BOREHOLE PW-2

PROJECT: Proposed Sudivision
LOCATION: Belfountain
CLIENT: Enterac

DATE: June 3 to June 10, 1988
EQUIPMENT: -
ELEVATION DATUM: Geodetic

STRATIGRAPHY			SAMPLES				HYDRAULIC CONDUCTIVITY K, CM/SEC 1x10 1x10 1x10 1x10 / WATER CONTENT PERCENT 10 20 30 40	ELEV. DEPTH	DETAILS OF INSTALLATION
ELEV. DEPTH	DESCRIPTION	STRAT. PLOT	NUMBER	TYPE	'N' VALUES	RECOVERY			
413.0									
	SAND AND GRAVEL (not Logged)							410	200mm dia. steel casing.
406.1									6.9m
6.9	DOLOSTONE (Amabel Formation)							405	
								400	
								395	open hole in rock (200mmØ)
								390	
388.1									
24.9	DOLOSTONE AND SHALE (Manitoulin formation)							385	
383.4									
29.6	End of Borehole								

NOTES:

Field Supervisor: _____
Drawn by: _____
Checked by: _____

TOWN OF CALEDON
PLANNING
RECEIVED
Jul 12, 2021

Terraprobe

LOG OF BOREHOLE PW-3

PROJECT: Enterac Belfountain
LOCATION: Belfountain
CLIENT: Enterac

DATE: July 2, 1989
EQUIPMENT:
ELEVATION DATUM: Geodetic
FILE: 88164

ELEV. DEPTH m.	DESCRIPTION	STRAT. PLOT	GROUND WATER	SAMPLES: NUMBER	SAMPLES: TYPE	SAMPLES: 'N' VALUES
402.4	Ground Surface					
402.1	TOPSOIL					
0.3	Brown SAND AND GRAVEL AND STONES (logged by Well Drillers)					
391.7						
10.7	Brown CLAY, GRAVEL AND SILT					
390.2						
12.2	Continued ...					

m. ELEVATION SCALE: 402, 401, 400, 399, 398, 397, 396, 395, 394, 393, 392, 391, 390

PENETRATION RESISTANCE
BLOWS/0.3 m x
10 20 30 40
SHEAR STRENGTH, kPa

WATER CONTENT
PERCENT ○
Wp WI
10 20 30

NOTES:
1) Water encountered at 24.4 m and 33.5 m depth.
2) Water level at 385.5 m (elevation) on September 10, 1989.
3) Hole logged by well driller.

TOWN OF CALEDON
PLANNING
RECEIVED
Jul 12, 2021

Terraprobe

LOG OF BOREHOLE PW—3

PROJECT: Enterac Belfountain
LOCATION: Belfountain
CLIENT: Enterac

DATE: July 2, 1989
EQUIPMENT:
ELEVATION DATUM: Geodetic
FILE: 88164

STRATIGRAPHY				SAMPLES			m.	PENETRATION RESISTANCE BLOWS/0.3 m ×	WATER CONTENT PERCENT ○
ELEV. DEPTH m.	DESCRIPTION	STRAT. PLOT	GROUND WATER	NUMBER	TYPE	'N' VALUES	ELEVATION SCALE	10 20 30 40 SHEAR STRENGTH, kPa	Wp WI 10 20 30
402.4	Ground Surface								
402.1	TOPSOIL								
0.3	Brown SAND AND GRAVEL AND STONES (logged by Well Drillers)						402 401 400 399 398 397 396 395 394 393 392		
391.7									
10.7	Brown CLAY, GRAVEL AND SILT						391		
390.2									
12.2	Continued ...						390		

NOTES:
1) Water encountered at 24.4 m and 33.5 m depth.
2) Water level at 385.5 m (elevation) on September 10, 1989.

TOWN OF CALEDON
PLANNING
RECEIVED
Jul 12, 2021

Terraprobe

LOG OF BOREHOLE PW–3

CONT...

PROJECT: Enterac Belfountain
LOCATION: Belfountain
CLIENT: Enterac

DATE: July 2, 1989
EQUIPMENT:
ELEVATION DATUM: Geodetic
FILE: 88164

STRATIGRAPHY				SAMPLES			m.	PENETRATION RESISTANCE BLOWS/0.3 m x	WATER CONTENT PERCENT ○
ELEV. DEPTH m.	DESCRIPTION	STRAT. PLOT	GROUND WATER	NUMBER	TYPE	'N' VALUES	ELEVATION SCALE	10 20 30 40 SHEAR STRENGTH, kPa	Wp WI 10 20 30
390.2									
	brown CLAY, GRAVEL & SILT		▼				390		
							389		
							388		
							387		
							386		
							385		
							384		
							383		
							382		
							381		
							380		
							379		
378.3									
24.1	grey-brown								
378.0	DOLOSTONE						378		
24.4	Continued ...								
							377		

NOTES:

TOWN OF CALEDON
PLANNING
RECEIVED
Jul 12, 2021

Terraprobe

LOG OF BOREHOLE PW-3
CONT...

PROJECT: Enterac Belfountain
LOCATION: Belfountain
CLIENT: Enterac

DATE: July 2, 1989
EQUIPMENT:
ELEVATION DATUM: Geodetic
FILE: 88164

STRATIGRAPHY				SAMPLES			m.	PENETRATION RESISTANCE BLOWS/0.3 m x	WATER CONTENT PERCENT ○
ELEV. DEPTH m.	DESCRIPTION	STRAT. PLOT	GROUND WATER	NUMBER	TYPE	'N' VALUES	ELEVATION SCALE	10 20 30 40 SHEAR STRENGTH, kPa	Wp WI 10 20 30
378.0									
	grey brown DOLOSTONE						377		
							376		
							375		
							374		
							373		
							372		
371.0							371		
31.4	grey DOLOSTONE						370		
369.5									
32.9	brown DOLOSTONE						369		
							368		
367.0							367		
35.4	blue SHALE								
366.1							366		
36.3	End of Borehole								

NOTES:

TOWN OF CALEDON
PLANNING
RECEIVED

Jul 12, 2021

Terraprobe

LOG OF BOREHOLE PW—4

PROJECT: Enterac - Belfountain
LOCATION: Belfountain
CLIENT: Enterac

DATE: July 4, 1989
EQUIPMENT:
ELEVATION DATUM: Geodetic
FILE: 88164

ELEV. DEPTH m.	DESCRIPTION	STRAT. PLOT	GROUND WATER	NUMBER	TYPE	'N' VALUES
386.2	Ground Surface					
385.9	TOPSOIL					
0.3	brown CLAY, SILT, GRAVEL, STONES & BOULDERS (logged by well driller)		▼			
374.0						
12.2	Continued ...					

m. ELEVATION SCALE: 386, 385, 384, 383, 382, 381, 380, 379, 378, 377, 376, 375, 374, 373

PENETRATION RESISTANCE BLOWS/0.3 m — 10 20 30 40 — SHEAR STRENGTH, kPa

WATER CONTENT PERCENT ○ — Wp — Wl — 10 20 30

NOTES:
1) Water encountered at 26.2 m depth.
2) Water level at 374.5 m (elevation) on September 10, 1989.
3) Hole logged by well driller.

TOWN OF CALEDON
PLANNING
RECEIVED
Jul 12, 2021

Terraprobe

LOG OF BOREHOLE PW—4 CONT...

PROJECT: Enterac - Belfountain
LOCATION: Belfountain
CLIENT: Enterac
DATE: July 4, 1989
EQUIPMENT:
ELEVATION DATUM: Geodetic
FILE: 88164

STRATIGRAPHY				SAMPLES			m.	PENETRATION RESISTANCE BLOWS/0.3 m x 10 20 30 40 SHEAR STRENGTH, kPa	WATER CONTENT PERCENT ○ Wp WI 10 20 30
ELEV. DEPTH m.	DESCRIPTION	STRAT. PLOT	GROUND WATER	NUMBER	TYPE	'N' VALUES	ELEVATION SCALE		
374.0									
	brown CLAY, SILT, GRAVEL STONES & BOULDERS						373 372		
371.3									
14.9	blue CLAY						371 370 369		
367.9									
18.3	red SHALE						368		
367.0									
19.2	blue SHALE						367 366		
364.9							365		
21.3	Continued ...								

NOTES:

TOWN OF CALEDON
PLANNING
RECEIVED
Jul 12, 2021

Terraprobe

LOG OF BOREHOLE PW–4 CONT...

PROJECT: Enterac - Belfountain
LOCATION: Belfountain
CLIENT: Enterac

DATE: July 4, 1989
EQUIPMENT:
ELEVATION DATUM: Geodetic
FILE: 88164

STRATIGRAPHY				SAMPLES			m.	PENETRATION RESISTANCE BLOWS/0.3 m x 10 20 30 40 SHEAR STRENGTH, kPa	WATER CONTENT PERCENT ○ Wp WL 10 20 30
ELEV. DEPTH m.	DESCRIPTION	STRAT. PLOT	GROUND WATER	NUMBER	TYPE	'N' VALUES	ELEVATION SCALE		
364.9									
	red **SHALE**						364		
363.3									
22.9	Blue **SHALE**						363		
							362		
							361		
360.0							360		
26.2	End of Borehole						359		

NOTES:

TOWN OF CALEDON
PLANNING
RECEIVED
Jul 12, 2021

Terraprobe

LOG OF BOREHOLE OW-1

PROJECT: Proposed Sudivision
LOCATION: Belfountain
CLIENT: Enterac

DATE: April 24 - 25, 1988
EQUIPMENT: Mobile B-61 - rotary
ELEVATION DATUM: Geodetic

STRATIGRAPHY			SAMPLES				HYDRAULIC CONDUCTIVITY K, CM/SEC 1×10 1×10 1×10 1×10 / WATER CONTENT PERCENT 10 20 30 40	ELEV. DEPTH	DETAILS OF INSTALLATION
ELEV. DEPTH	DESCRIPTION	STRAT. PLOT	NUMBER	TYPE	'N' VALUES	RECOVERY			OW1-1 OW2-2
390.0	**GROUND SURFACE**								
	Dense **SAND AND GRAVEL,** numerous boulders		1	AS	-				0.6
387.9	**(OUTWASH)**								2.1
2.1	Grey **DOLOSTONE,** weakly fractured (Amabel Formation)		2	AS	-				3.0
284.9			3	CS	-			285	5.1
5.1	End of Borehole								
								280	

NOTES: Concrete seal and protective pipe at grade.
Installations in separate holes.

Field Supervisor: _____
Drawn by: _____
Checked by: _____

TOWN OF CALEDON
PLANNING
RECEIVED
Jul 12, 2021

Terraprobe

LOG OF BOREHOLE OW-2

PROJECT: Proposed Sudivision
LOCATION: Belfountain
CLIENT: Enterac

DATE: March 24 - April 7, 1988
EQUIPMENT: Mobile B-G1 - rotary
ELEVATION DATUM: Geodetic

STRATIGRAPHY			SAMPLES				HYDRAULIC CONDUCTIVITY K., CM/SEC 1x10 1x10 1x10 1x10 / WATER CONTENT PERCENT 10 20 30 40	ELEV. DEPTH	DETAILS OF INSTALLATION
ELEV. DEPTH	DESCRIPTION	STRAT. PLOT	NUMBER	TYPE	'N' VALUES	RECOVERY			OW2-1 OW2-2 OW2-3 OW2-4
417.0	**GROUND SURFACE**								
	Brown Dense **SAND AND GRAVEL, (OUTWASH)** numerous cobbles and boulders. Very difficult drilling. 6.8 to 8.8m 12.1 to 14.0m loss of mud circulation at 8.0 to 9.5m and 12.1 to 15m.		1	CS				415	
			2	CS				410	
402.0								405	9.1 11.9 DRY 15.1
15.0	Grey-Brown Damp **SAND, SILT,** some gravel and cobbles **(TILL)** water encountered at 25m.		3	CS				400	
			4	CS				395	22.2 25.1
391.0									
26.0	**SAND AND GRAVEL,** loss of mud circulation 27 to 29m.		5	CS				390	27.0
386.7			6	CS					
30.3	Continued								

NOTES: OW2 - 1 and 2-2 in same hole.
OQ2 - 3 and 2-4 in separate holes.

Field Supervisor: _____
Drawn by: _____
Checked by: _____

TOWN OF CALEDON
PLANNING
RECEIVED
Jul 12, 2021

Terraprobe

LOG OF BOREHOLE OW-2 CON'T

PROJECT: Proposed Sudivision
LOCATION: Belfountain
CLIENT: Enterac

DATE: March 24 - April 7, 1988
EQUIPMENT: Mobile B-G1 - rotary
ELEVATION DATUM: Geodetic

STRATIGRAPHY			SAMPLES				HYDRAULIC CONDUCTIVITY K, CM/SEC 1x10 1x10 1x10 1x10 / WATER CONTENT PERCENT 10 20 30 40	ELEV. DEPTH	DETAILS OF INSTALLATION
ELEV. DEPTH	DESCRIPTION	STRAT. PLOT	NUMBER	TYPE	'N' VALUES	RECOVERY			
386.7	Continued ...								
30.3	Grey **DOLOSTONE** (Amabel Formation) loss of mud circulation							385	31.0 34.0
383.0									
34.0	End of Borehole								

NOTES: OW2 - 1 and 2-2 in same hole.
OW2 - 3 and 2-4 in separate holes.

Field Supervisor: _____
Drawn by: _____
Checked by: _____

TOWN OF CALEDON
PLANNING
RECEIVED
Jul 12, 2021

Terraprobe

LOG OF BOREHOLE OW-3

PROJECT: Proposed Sudivision
LOCATION: Belfountain
CLIENT: Enterac

DATE: April 7 - 11, 1988
EQUIPMENT: Mobile B-61 - rotary
ELEVATION DATUM: Geodetic

STRATIGRAPHY			SAMPLES				HYDRAULIC CONDUCTIVITY K, CM/SEC 1x10 1x10 1x10 1x10 / WATER CONTENT PERCENT 10 20 30 40	ELEV. DEPTH	DETAILS OF INSTALLATION
ELEV. DEPTH	DESCRIPTION	STRAT. PLOT	NUMBER	TYPE	'N' VALUES	RECOVERY			OW3-1 OW3-2 OW3-3
413.0	Brown Dense **SAND AND GRAVEL,** numerous boulders **(OUTWASH)**		1	CS				410	1.0 3.0 4.0
406.0			2	CS					7.0
7.0	Grey **DOLOSTONE** (Amabel Formation) loss of mud circulation below 9m; switch to air rotary, appears highly fractured water encountered at 21m.		3	CS				405	
			4	CS				400	
			5	CS				395	
			6	CS				390	80.9 23.0
387.7									
25.3	Black to Grey **DOLOSTONE AND SHALE** (Manitoulin Formation)		7	CS				385	25.0
383.9									28.3
29.1	End of Borehole								29.1

NOTES: Concrete seal and protective pipe at grade.
All wells installed in same hole.

Field Supervisor: _____
Drawn by: _____
Checked by: _____

TOWN OF CALEDON
PLANNING
RECEIVED
Jul 12, 2021

Terraprobe

LOG OF BOREHOLE OW-4

PROJECT: Proposed Sudivision
LOCATION: Belfountain
CLIENT: Enterac

DATE: April 20 - 24, 1988
EQUIPMENT: Mobile B-61
ELEVATION DATUM: Geodetic

STRATIGRAPHY			SAMPLES				HYDRAULIC CONDUCTIVITY K, CM/SEC 1×10 1×10 1×10 1×10 / WATER CONTENT PERCENT 10 20 30 40	ELEV. DEPTH	DETAILS OF INSTALLATION
ELEV. DEPTH	DESCRIPTION	STRAT. PLOT	NUMBER	TYPE	'N' VALUES	RECOVERY			OW4-1, OW4-2, OW4-3, OW4-4
441.0	Brown Dense **SAND AND GRAVEL,** numerous cobbles and boulders **(OUTWASH)**		1	CS				440	4.1
	— — increasing content of fines below 7m.							435	6.4 Dry
	loss of mud circulation at 8-9m, 15.1 to 16.2m 30.1 to base at hole		2	CS				430	9.0
426.0									14.2
15.0	**SAND AND GRAVEL, SILT,** numerous cobbles and boulders **(TILL)**		3	CS				425	17.1
			4	CS				420	
			5	CS				419	25
411.0									28.3
30.0 409.7	**SAND AND GRAVEL**		6	CS					30.3 31.1
408.0	**AMABEL DOLOSTONE**		7	CS				410	33.0
33.0	End of Borehole								

NOTES: OW4-1 and 4-2 installed in same hole. OW4-3 and 4-4 installed in same hole. Concrete seal and protective pipe at grade.

Field Supervisor: _____
Drawn by: _____
Checked by: _____

TOWN OF CALEDON
PLANNING
RECEIVED
Jul 12, 2021

Terraprobe

LOG OF BOREHOLE 88–13

PROJECT: Proposed Sudivision
LOCATION: Belfountain
CLIENT: Enterac

DATE: April 28, 1988
EQUIPMENT: CME 55
ELEVATION DATUM: - FILE: 88164

ELEV. DEPTH m.	DESCRIPTION (Ground Surface)	NUMBER	TYPE	'N' VALUES
	TOPSOIL			
0.3	Brown Loose Damp **SILT**, trace sand	1	SS	8
1.4	Brown Dense Damp **SILTY SAND AND GRAVEL**, occasional cobbles **(TILL)**	2	SS	27
		3	SS	62
	thin layers clean sand	4	SS	82/11"
3.5	End of Borehole			

STRAT. PLOT | GROUND WATER | ELEVATION SCALE m.

PENETRATION RESISTANCE BLOWS/0.3 m x
10 20 30 40
SHEAR STRENGTH, kPa

WATER CONTENT PERCENT ○
Wp WI
10 20 30

NOTES:
1. Borehole caving at 3.0m depth and dry on completion of drilling.
2. Standpipe dry on May 12, July 7, 1988.

TOWN OF CALEDON
PLANNING
RECEIVED
Jul 12, 2021

Terraprobe

LOG OF BOREHOLE 89–4

PROJECT: Belfountain Subdivision
LOCATION: Belfountain
CLIENT: Enterac

DATE: August 22, 1989
EQUIPMENT: CME 55
ELEVATION DATUM: Geodetic
FILE: 88164

ELEV. DEPTH m.	DESCRIPTION	SAMPLE NUMBER	TYPE	'N' VALUES	ELEVATION SCALE m.
399.6	Ground Surface				
	TOPSOIL				
399.0					399
0.6	Brown Dense to Very Dense Moist SANDY SILT, some clay, trace gravel (TILL)	1	SS	27	
		2	SS	68/11"	398
		3	SS	47	397
396.9					
2.7	Brown Very Dense Moist SAND AND GRAVEL, some silt OUTWASH	4	SS	83	396
		5	SS	100/5"	395
					394
		6	SS	85	393
		7	SS	42	392
					391
390.5					
9.1	Continued.....				

STRAT. PLOT | GROUND WATER | PENETRATION RESISTANCE BLOWS/0.3 m x 10 20 30 40 | SHEAR STRENGTH, kPa | WATER CONTENT PERCENT ○ Wp Wl 10 20 30

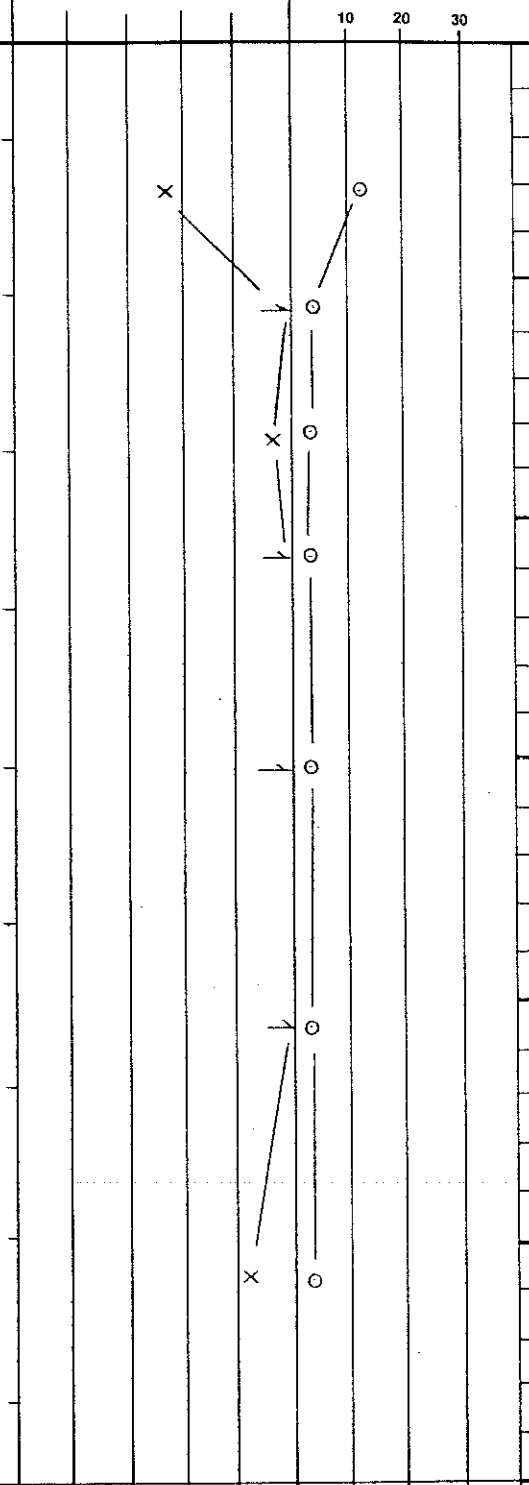

NOTES:
1. Borehole open and dry on completion of drilling.
2. Standpipe dry at a 12.0m depth on September 10, 1989.

TOWN OF CALEDON
PLANNING
RECEIVED
Jul 12, 2021

Terraprobe

LOG OF BOREHOLE 89—4 CON'T

PROJECT: Belfountain Subdivision
LOCATION: Belfountain
CLIENT: Enterac

DATE: August 22, 1989
EQUIPMENT: CME 55
ELEVATION DATUM: Geodetic
FILE: 88164

STRATIGRAPHY				SAMPLES			m.	PENETRATION RESISTANCE BLOWS/0.3 m x 10 20 30 40 SHEAR STRENGTH, kPa	WATER CONTENT PERCENT ○ Wp Wl 10 20 30
ELEV. DEPTH m.	DESCRIPTION	STRAT. PLOT	GROUND WATER	NUMBER	TYPE	'N' VALUES	ELEVATION SCALE		
390.5	Continued.....								
9.1	Brown Very Moist Dense **SAND AND GRAVEL,** trace to some silt			8	SS	60	390		
				9	SS	65	389		
	OUTWASH						388		
387.3				10	SS	100/5"			
12.3	End of Borehole Auger Refusal						387		

NOTES:

TOWN OF CALEDON
PLANNING
RECEIVED
Jul 12, 2021

WATER RESOURCES DIVISION
AUG 4 1965
ONTARIO WATER RESOURCES COMMISSION

UTM 17 Z 579290 E
5 R 4849168 N
Elev. 5 R 1260
Basin 24

The Ontario Water Resources Commission Act

WATER WELL RECORD

49 No 1010

County or District PEEL
Township, Village, Town or City CALEDON
Con. V W.H-ST. Lot 9
Date completed 29 (day) March (month) 1965 (year)
Owner Corner Sandstone Quaries Ltd. (print in block letters)
Address Belfountain, Ontario.

Casing and Screen Record

Inside diameter of casing 5"
Total length of casing 38'
Type of screen —
Length of screen —
Depth to top of screen —
Diameter of finished hole 5"

Pumping Test

Static level 20'
Test-pumping rate 5 G.P.M.
Pumping level 90'
Duration of test pumping 2 hrs.
Water clear or cloudy at end of test clear
Recommended pumping rate 4 G.P.M.
with pump setting of 100 feet below ground surface

Well Log

Overburden and Bedrock Record	From ft.	To ft.	Water Record: Depth(s) at which water(s) found	Water Record: Kind of water (fresh, salty, sulphur)
Hardpan and boulders	0	25		
Gravel	25	36		
Red and blue shale	36	120	90-115	fresh

For what purpose(s) is the water to be used? D

Is well on upland, in valley, or on hillside? upland

Drilling or Boring Firm Water Well Drilling

Address R. H. GADKE - PHONE 123W1
R.R. 1 - CLIFFORD, ONTARIO

Licence Number

Name of Driller or Borer Donald Goll

Address Harriston, Ont.

Date

(Signature of Licensed Drilling or Boring Contractor)

Form 7 15M-60-4138

OWRC COPY

Location of Well

In diagram below show distances of well from road and lot line. Indicate north by arrow.

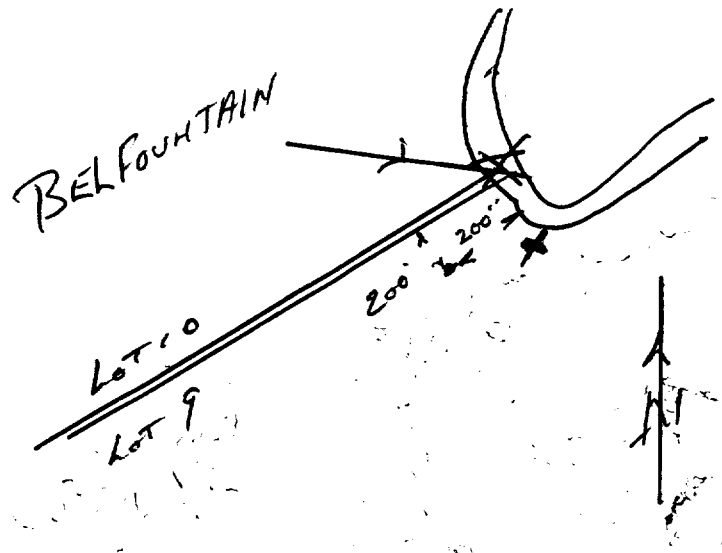

TOWN OF CALEDON
PLANNING
RECEIVED
Jul 12, 2021

UTM 17 Z 579608 E

5 R 4849171 N

Elev. 65 R 1255

Basin 24

49 № 1011

The Ontario Water Resources Commission Act

WATER WELL RECORD

County or District ~~CALEDON~~ PEEL

Township, ~~Village, Town or City~~ ~~PEEL~~ CALEDON

Con. V H.ST.W. Lot 9

Date completed 21 (day) JUNE (month) 1965 (year)

[redacted]ress 193 GLASGOW ST NORTH GUELPH

Casing and Screen Record

Inside diameter of casing 4"

Total length of casing 14 FT

Type of screen NONE

Length of screen

Depth to top of screen

Diameter of finished hole 4"

Pumping Test

Static level 38 FT

Test-pumping rate 3 G.P.M.

Pumping level 42 FT

Duration of test pumping 1 hr

Water clear or cloudy at end of test CLEAR

Recommended pumping rate 3 G.P.M.

with pump setting of 46 feet below ground surface

Well Log

Overburden and Bedrock Record	From ft.	To ft.	Water Record: Depth(s) at which water(s) found	Water Record: Kind of water (fresh, salty, sulphur)
OLD WELL	0	12		
LIGHT GREY LIMESTONE	12	48	40 FT	FRESH

For what purpose(s) is the water to be used? HOUSE

Is well on upland, in valley, or on hillside? upland.

Drilling or Boring Firm LADCO DRILLING AND EXPLORATION CO

Address R. R. #1 HILLSBURGH

Licence Number 1874

Name of Driller or Borer THOMAS LANG

Address HILLSBURGH, R.R. 1

Date June 22/65

T. Lang.

(Signature of Licensed Drilling or Boring Contractor)

Form 7 15M-60-4138

OWRC COPY

Location of Well

In diagram below show distances of well from road and lot line. Indicate north by arrow.

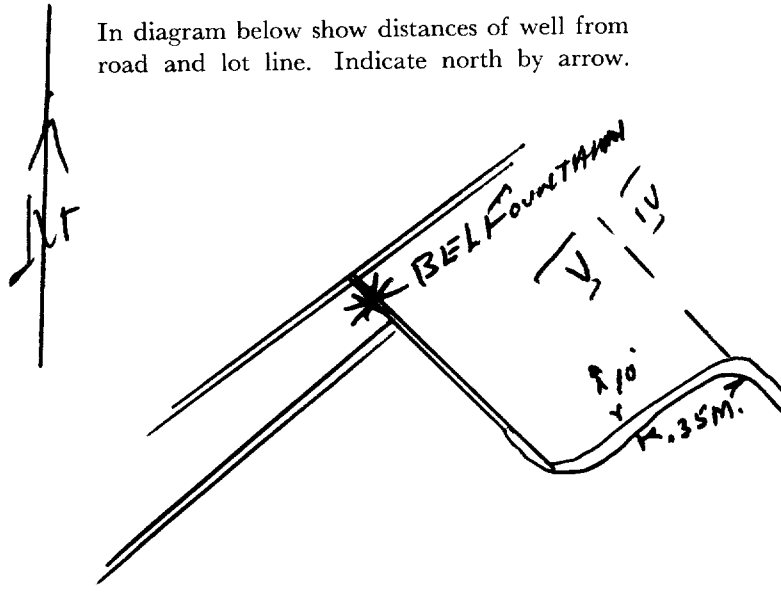

CSS.S8

TOWN OF CALEDON
PLANNING
RECEIVED
Jul 12, 2021

GROUND WATER BRANCH
JUL 9 1962
ONTARIO WATER
RESOURCES COMMISSION

UTM 17 Z 579547 E
5 R 4849420 N
Elev 78 # 1245
dry Hole
Basin 24

The Ontario Water Resources Commission Act

WATER WELL RECORD

County or District Peel
Township, Village, Town or City Caledon
Con V W.H. ST. Lot 10
Date completed 10 (day) May (month) 1962 (year)
[redacted]ress Toronto Ont.

Casing and Screen Record

Inside diameter of casing	6¼ inch
Total length of casing	22 ft
Type of screen	none
Length of screen	none
Depth to top of screen	nil
Diameter of finished hole	6¼ inch

Pumping Test

Static level	-
Test-pumping rate	- G.P.M.
Pumping level	-
Duration of test pumping	-
Water clear or cloudy at end of test	-
Recommended pumping rate	* G.P.M.
with pump setting of	- feet below ground surface

Well Log

Overburden and Bedrock Record	From ft.	To ft.	Water Record: Depth(s) at which water(s) found	Water Record: Kind of water (fresh, salty, sulphur)
top soil	0	1	dry hole	nil
boulders gravel	1	15		
gray clay, gravel	15	22		
rock lt. gray	22	62		
red shale	62	100		
Total depth - 100 ft.				

For what purpose(s) is the water to be used? domestic

Is well on upland, in valley, or on hillside? hillside

Drilling or Boring Firm J L Graham Drilling Contractor

Address 119 Renfield St. Guelph Ont.

Licence Number 481

Name of Driller or Borer Robert Graham

Address 210 Waverley Street, Guelph Ont.

Date June 12th 1962.

J L Graham per [signature]
(Signature of Licensed Drilling or Boring Contractor)

Location of Well

In diagram below show distances of well from road and lot line. Indicate north by arrow.

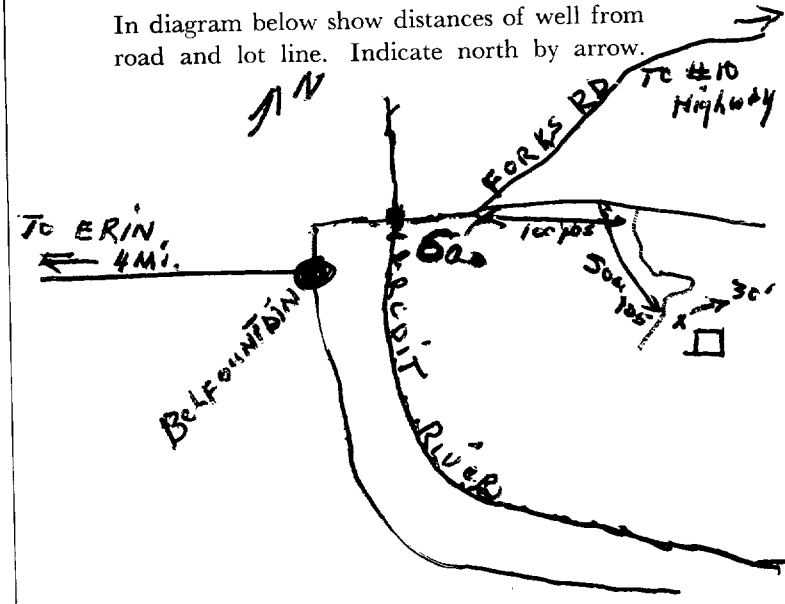

Form 7 15M Sets 60-5930

OWRC COPY

TOWN OF CALEDON
PLANNING
RECEIVED
Jul 12, 2021

GROUND WATER BRANCH
49 JUL No. 1962 4018
ONTARIO WATER
RESOURCES COMMISSION

UTM 17 Z 579567 E
5 R 4849256 N
Well # 2.
Elev 9 R
Basin 2 C

The Ontario Water Resources Commission Act

WATER WELL RECORD

County or District Peel
Township, Village, Town or City Caledon
Con. W.H. St. Lot 10
Date completed 16th (day) May (month) 1962 (year)
[redacted]ress Toronto Ont.

Casing and Screen Record

Inside diameter of casing 6¼ inch
Total length of casing 20 ft
Type of screen nil
Length of screen nil
Depth to top of screen nil
Diameter of finished hole 6¼ inch

Pumping Test

Static level 50 ft
Test-pumping rate 1 G.P.M.
Pumping level 60 ft
Duration of test pumping 2 hrs.
Water clear or cloudy at end of test clear
Recommended pumping rate 1 G.P.M.
with pump setting of 70 ft feet below ground surface

Well Log

Overburden and Bedrock Record	From ft.	To ft.	Water Record: Depth(s) at which water(s) found	Water Record: Kind of water (fresh, salty, sulphur)
gravel and stones	0	5	75 ft	fresh
gravel gray clay	5	19		
light gray rock	19	58		
red shale	58	75		

For what purpose(s) is the water to be used? domestic

Is well on upland, in valley, or on hillside? hillside

Drilling or Boring Firm J L Graham Drilling Contractor

Address 119 Renfield St. Guelph Ont.

Licence Number 481

Name of Driller or Borer Robert Graham

Address 210 Waverley Drive Guelph Ont.

Date June 12th 1962

J L Graham per [signature]
(Signature of Licensed Drilling or Boring Contractor)

Form 7 15M Sets 60-5930

OWRC COPY

Location of Well

In diagram below show distances of well from road and lot line. Indicate north by arrow.

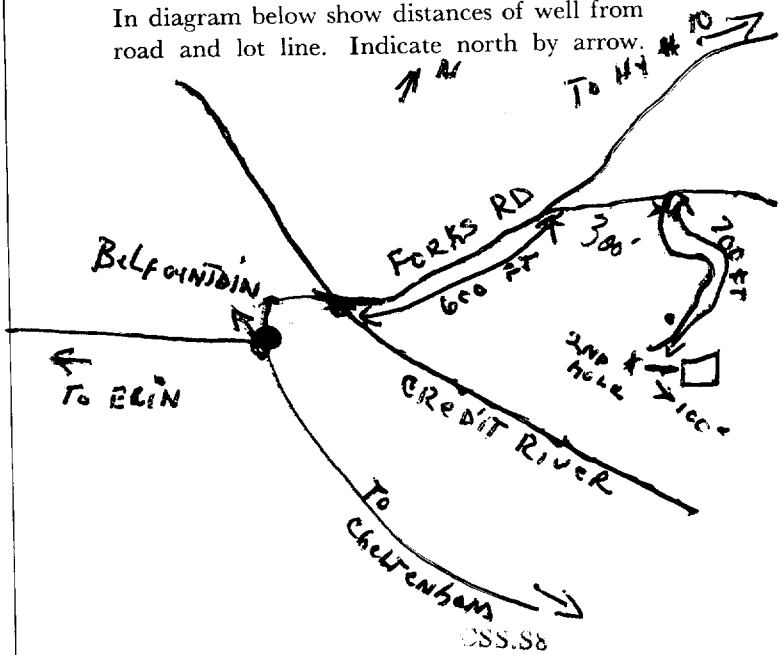

CSS.S8

TOWN OF CALEDON
PLANNING
RECEIVED
JUL 12 2021

ONTARIO

MINISTRY OF THE ENVIRONMENT
The Ontario Water Resources Act

WATER WELL RECORD

40 P/16 E

1. PRINT ONLY IN SPACES PROVIDED
2. CHECK ☒ CORRECT BOX WHERE APPLICABLE

11 | 4904555 | MUNICIP. 49 002 | CON. HS W C 05

COUNTY OR DISTRICT: PEEL
TOWNSHIP, BOROUGH, CITY, TOWN, VILLAGE: CALEDON
CON., BLOCK, TRACT, SURVEY, ETC.: V
LOT: 009
[redacted] CALEDON ONT.
DATE COMPLETED: DAY 09 MO. 04 YR. 74
UTM ZONE 17 | 0349084 | RC. 4 | ELEVATION 1262 | RC. 5 | BASIN CODE 24

LOG OF OVERBURDEN AND BEDROCK MATERIALS (SEE INSTRUCTIONS)

GENERAL COLOUR	MOST COMMON MATERIAL	OTHER MATERIALS	GENERAL DESCRIPTION	DEPTH - FEET FROM	DEPTH - FEET TO
BROWN	TOPSOIL			0	3
BROWN	CLAY &	BOULDERS		3	28
WHITE	GRAVEL &	SAND		28	43
WHITE	LIMESTONE	(SOFT)		43	48

OWRC
P-9

31 | 0003 6 02 | 0028 Gast 13 | 0043 1 1 1 28 | 0048 1 1 5

32

41 WATER RECORD

WATER FOUND AT - FEET	KIND OF WATER
0043 43-48	1 ☒ FRESH 2 ☐ SALTY 3 ☐ SULPHUR 4 ☐ MINERAL
	1 ☐ FRESH 2 ☐ SALTY 3 ☐ SULPHUR 4 ☐ MINERAL
	1 ☐ FRESH 2 ☐ SALTY 3 ☐ SULPHUR 4 ☐ MINERAL
	1 ☐ FRESH 2 ☐ SALTY 3 ☐ SULPHUR 4 ☐ MINERAL
	1 ☐ FRESH 2 ☐ SALTY 3 ☐ SULPHUR 4 ☐ MINERAL

51 CASING & OPEN HOLE RECORD

INSIDE DIAM. INCHES	MATERIAL	WALL THICKNESS INCHES	DEPTH - FEET FROM	DEPTH - FEET TO
5" 05	1 ☒ STEEL 2 ☐ GALVANIZED 3 ☐ CONCRETE 4 ☐ OPEN HOLE	188.	0	0044
05	1 ☐ STEEL 2 ☐ GALVANIZED 3 ☐ CONCRETE 4 ☒ OPEN HOLE		44	0048
	1 ☐ STEEL 2 ☐ GALVANIZED 3 ☐ CONCRETE 4 ☐ OPEN HOLE			

SCREEN

SIZE(S) OF OPENING (SLOT NO.)	DIAMETER INCHES	LENGTH FEET

MATERIAL AND TYPE | DEPTH TO TOP OF SCREEN FEET

61 PLUGGING & SEALING RECORD

DEPTH SET AT - FEET FROM	DEPTH SET AT - FEET TO	MATERIAL AND TYPE (CEMENT GROUT LEAD PACKER, ETC.)
10-13	14-17	
18-21	22-25	
26-29	30-33	

71 PUMPING TEST

PUMPING TEST METHOD: 1 ☐ PUMP 2 ☒ BAILER
PUMPING RATE: 0005 GPM
DURATION OF PUMPING: 02 HOURS 00 MINS

STATIC LEVEL	WATER LEVEL END OF PUMPING	WATER LEVELS DURING: 1 ☐ PUMPING 2 ☒ RECOVERY			
		15 MINUTES	30 MINUTES	45 MINUTES	60 MINUTES
009 FEET	032 FEET	020 FEET	012 FEET	009 FEET	FEET

IF FLOWING GIVE RATE: GPM
PUMP INTAKE SET AT: FEET
WATER AT END OF TEST: 1 ☒ CLEAR 2 ☐ CLOUDY
RECOMMENDED PUMP TYPE: ☐ SHALLOW ☒ DEEP
RECOMMENDED PUMP SETTING: 045 FEET
RECOMMENDED PUMPING RATE: 0005 GPM.
000.2 GPM./FT. SPECIFIC CAPACITY

LOCATION OF WELL

IN DIAGRAM BELOW SHOW DISTANCES OF WELL FROM ROAD AND LOT LINE. INDICATE NORTH BY ARROW.

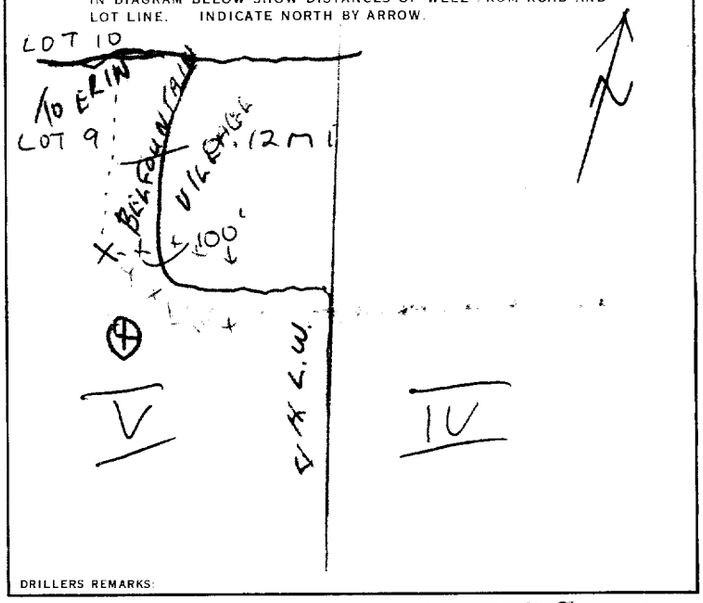

DRILLERS REMARKS:

FINAL STATUS OF WELL

1 ☒ WATER SUPPLY 2 ☐ OBSERVATION WELL 3 ☐ TEST HOLE 4 ☐ RECHARGE WELL 5 ☐ ABANDONED, INSUFFICIENT SUPPLY 6 ☐ ABANDONED, POOR QUALITY 7 ☐ UNFINISHED

WATER USE 01

1 ☒ DOMESTIC 2 ☐ STOCK 3 ☐ IRRIGATION 4 ☐ INDUSTRIAL ☐ OTHER 5 ☐ COMMERCIAL 6 ☐ MUNICIPAL 7 ☐ PUBLIC SUPPLY 8 ☐ COOLING OR AIR CONDITIONING 9 ☐ NOT USED

METHOD OF DRILLING

1 ☒ CABLE TOOL 2 ☐ ROTARY (CONVENTIONAL) 3 ☐ ROTARY (REVERSE) 4 ☐ ROTARY (AIR) 5 ☐ AIR PERCUSSION 6 ☐ BORING 7 ☐ DIAMOND 8 ☐ JETTING 9 ☐ DRIVING

CONTRACTOR

NAME OF WELL CONTRACTOR: Kenneth McClure | LICENCE NUMBER: 3513
ADDRESS: Inglewood Dr.
NAME OF DRILLER OR BORER: Same | LICENCE NUMBER: 3513
SIGNATURE OF CONTRACTOR: Kenneth McClure | SUBMISSION DATE: DAY 9 MO. 4 YR. 72

OFFICE USE ONLY

DATA SOURCE: 1 | CONTRACTOR: 3513 | DATE RECEIVED: 75 01 15
DATE OF INSPECTION: 14/3/75 | INSPECTOR: J.B.
REMARKS: CSS.S8
P JP
WI

MINISTRY OF THE ENVIRONMENT COPY

FORM 7 07-091

TOWN OF CALEDON
PLANNING
RECEIVED
Jul 12, 2021

Ontario

MINISTRY OF THE ENVIRONMENT
The Ontario Water Resources Act

WATER WELL RECORD

40 P/16 E

1. PRINT ONLY IN SPACES PROVIDED
2. CHECK ☒ CORRECT BOX WHERE APPLICABLE

11 4905400 49002 HS W 05

COUNTY OR DISTRICT	TOWNSHIP, BOROUGH, CITY, TOWN, VILLAGE	CON., BLOCK, TRACT, SURVEY, ETC	LOT
PEEL	CALEDONE	5 WHS	009

[redacted] BUSH ST. / BELFOUNTAIN

DATE COMPLETED: DAY 18 MO 10 YR. 77

UTM ZONE 17 NORTHING 849300 EASTING 5 ELEVATION 1175 ZONE 5 BASIN CODE 24

LOG OF OVERBURDEN AND BEDROCK MATERIALS (SEE INSTRUCTIONS)

GENERAL COLOUR	MOST COMMON MATERIAL	OTHER MATERIALS	GENERAL DESCRIPTION	DEPTH - FEET FROM	DEPTH - FEET TO
BROWN	GRAVEL	STONES - ROCKS		0	48
GREY	CLAY	STONES		48	80
GREY	CLAY		SOFT	80	95
GREY	CLAY	GREY ROCK		95	112
GREY	ROCK	GREY-CLAY RIDGES		112	143
RED	SHALE			143	180

31 0048631112 0080205112 0091520585 0112205246 0143226105 0180717

32

41 WATER RECORD

WATER FOUND AT - FEET	KIND OF WATER
0155 180	1 ☐ FRESH 2 ☐ SALTY 3 ☐ SULPHUR 4 ☐ MINERAL — 2 SALTY
	1 ☐ FRESH 2 ☐ SALTY 3 ☐ SULPHUR 4 ☐ MINERAL
	1 ☐ FRESH 2 ☐ SALTY 3 ☐ SULPHUR 4 ☐ MINERAL
	1 ☐ FRESH 2 ☐ SALTY 3 ☐ SULPHUR 4 ☐ MINERAL
	1 ☐ FRESH 2 ☐ SALTY 3 ☐ SULPHUR 4 ☐ MINERAL

51 CASING & OPEN HOLE RECORD

INSIDE DIAM INCHES	MATERIAL	WALL THICKNESS INCHES	DEPTH - FEET FROM	DEPTH - FEET TO
04	1 ☒ STEEL 2 ☐ GALVANIZED 3 ☐ CONCRETE 4 ☐ OPEN HOLE	.188	0	0119
04	1 ☐ STEEL 2 ☐ GALVANIZED 3 ☐ CONCRETE 4 ☒ OPEN HOLE		1190	180
	1 ☐ STEEL 2 ☐ GALVANIZED 3 ☐ CONCRETE 4 ☐ OPEN HOLE			

SCREEN

SIZE(S) OF OPENING (SLOT NO.)	DIAMETER INCHES	LENGTH FEET
MATERIAL AND TYPE	DEPTH TO TOP OF SCREEN FEET	

61 PLUGGING & SEALING RECORD

DEPTH SET AT - FEET FROM	DEPTH SET AT - FEET TO	MATERIAL AND TYPE (CEMENT GROUT LEAD PACKER, ETC.)

71 PUMPING TEST

PUMPING TEST METHOD: 1 ☒ PUMP 2 ☐ BAILER — PUMPING RATE: 0005 GPM — DURATION OF PUMPING: 03 HOURS 00 MINS

STATIC LEVEL	WATER LEVEL END OF PUMPING	WATER LEVELS DURING: 15 MINUTES	30 MINUTES	45 MINUTES	60 MINUTES
057 FEET	070 FEET	060 FEET	057 FEET	057 FEET	057 FEET

(1 ☐ PUMPING 2 ☒ RECOVERY)

IF FLOWING, GIVE RATE	PUMP INTAKE SET AT	WATER AT END OF TEST
GPM	90 FEET	1 ☒ CLEAR 2 ☐ CLOUDY

RECOMMENDED PUMP TYPE	RECOMMENDED PUMP SETTING	RECOMMENDED PUMP RATE
☐ SHALLOW ☒ DEEP	090 FEET	0005 GPM

GPM./FT. SPECIFIC CAPACITY

LOCATION OF WELL

IN DIAGRAM BELOW SHOW DISTANCES OF WELL FROM ROAD AND LOT LINE. INDICATE NORTH BY ARROW.

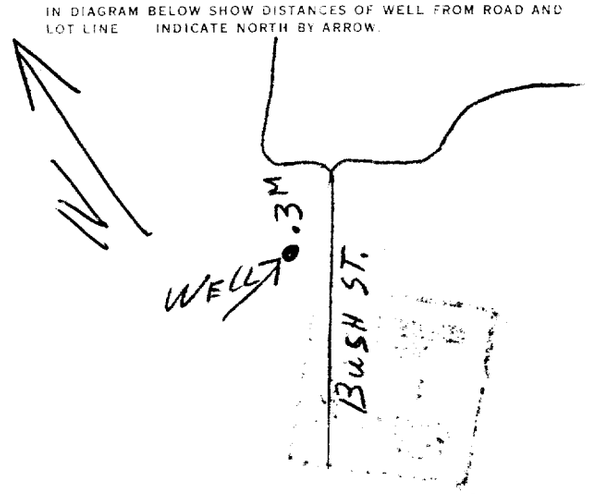

DRILLERS REMARKS:

SM

FINAL STATUS OF WELL 54: 1 ☒ WATER SUPPLY; 2 ☐ OBSERVATION WELL; 3 ☐ TEST HOLE; 4 ☐ RECHARGE WELL; 5 ☐ ABANDONED, INSUFFICIENT SUPPLY; 6 ☐ ABANDONED, POOR QUALITY; 7 ☐ UNFINISHED

WATER USE 55-56: 01 — 1 ☒ DOMESTIC; 2 ☐ STOCK; 3 ☐ IRRIGATION; 4 ☐ INDUSTRIAL; ☐ OTHER; 5 ☐ COMMERCIAL; 6 ☐ MUNICIPAL; 7 ☐ PUBLIC SUPPLY; 8 ☐ COOLING OR AIR CONDITIONING; 9 ☐ NOT USED

METHOD OF DRILLING 57: 2 — 1 ☐ CABLE TOOL; 2 ☒ ROTARY (CONVENTIONAL); 3 ☐ ROTARY (REVERSE); 4 ☐ ROTARY (AIR); 5 ☐ AIR PERCUSSION; 6 ☐ BORING; 7 ☐ DIAMOND; 8 ☐ JETTING; 9 ☐ DRIVING

CONTRACTOR

NAME OF WELL CONTRACTOR: Rudy WELL DRILLING — LICENCE NUMBER: 2332

ADDRESS: RR1 Hillsburg

NAME OF DRILLER OR BORER: Rudy GARBOTZ — LICENCE NUMBER: 2332

SIGNATURE OF CONTRACTOR: Rudy Garbotz — SUBMISSION DATE: DAY ____ MO. ____ YR. ____

OFFICE USE ONLY

DATA SOURCE 58: 1 — CONTRACTOR 59-62: 2332 — DATE RECEIVED 63-68: 210278 — 80

DATE OF INSPECTION: — INSPECTOR: — Aug 21 78

REMARKS: 88 88 — Changed From 4905294

P

WI

MINISTRY OF THE ENVIRONMENT COPY

FORM 7 MOE 07-091

TOWN OF CALEDON
PLANNING
RECEIVED
Jul 12, 2021

Ministry of the Environment
Ontario

The Ontario Water Resources Act

WATER WELL RECORD

CV

7/87

1. PRINT ONLY IN SPACES PROVIDED
2. CHECK ☒ CORRECT BOX WHERE APPLICABLE

11 4906673

MUNICIP CON 05

COUNTY OR DISTRICT: Peel
TOWNSHIP, BOROUGH, CITY, TOWN, VILLAGE: CALEDON (CALEDON)
CON., BLOCK, TRACT, SURVEY, ETC.: 5 WHS
LOT: ~~X~~ 10
OWNER (SURNAME FIRST): Bel Fountain Church
ADDRESS: c/o [redacted] MAIN ST & 4th Line W Belfountain, RR#1 Terra Cotta, ONT
DATE COMPLETED: DAY 09 MO 08 YR 87

2 ZONE 17 EASTING 579324 NORTHING 4849123 ELEVATION 0384 BASIN CODE

LOG OF OVERBURDEN AND BEDROCK MATERIALS (SEE INSTRUCTIONS)

GENERAL COLOUR	MOST COMMON MATERIAL	OTHER MATERIALS	GENERAL DESCRIPTION	DEPTH - FEET FROM	DEPTH - FEET TO
BROWN	CLAY	SAND, STONES		0	35
Red	"	GRAVEL		35	45
Grey	"	"		45	60
Blue	Shale			60	85
Grey	Rock			85	105
Blue	Shale			105	120
Red	"			120	130
			TOTAL Depth	130	ft.

31
32

41 WATER RECORD

WATER FOUND AT - FEET	KIND OF WATER
90	1 ☒ FRESH 2 ☐ SALTY 3 ☐ SULPHUR 4 ☐ MINERALS 6 ☐ GAS
120	1 ☒ FRESH 2 ☐ SALTY 3 ☐ SULPHUR 4 ☐ MINERALS 6 ☐ GAS
	1 ☐ FRESH 2 ☐ SALTY 3 ☐ SULPHUR 4 ☐ MINERALS 6 ☐ GAS
	1 ☐ FRESH 2 ☐ SALTY 3 ☐ SULPHUR 4 ☐ MINERALS 6 ☐ GAS
	1 ☐ FRESH 2 ☐ SALTY 3 ☐ SULPHUR 4 ☐ MINERALS 6 ☐ GAS

51 CASING & OPEN HOLE RECORD

INSIDE DIAM INCHES	MATERIAL	WALL THICKNESS INCHES	DEPTH - FEET FROM	DEPTH - FEET TO
5	1 ☒ STEEL 2 ☐ GALVANIZED 3 ☐ CONCRETE 4 ☐ OPEN HOLE 5 ☐ PLASTIC	.188	0	64
5	1 ☐ STEEL 2 ☐ GALVANIZED 3 ☐ CONCRETE 4 ☒ OPEN HOLE 5 ☐ PLASTIC		64	130
	1 ☐ STEEL 2 ☐ GALVANIZED 3 ☐ CONCRETE 4 ☐ OPEN HOLE 5 ☐ PLASTIC			

SCREEN

SIZE(S) OF OPENING (SLOT NO.)	DIAMETER INCHES	LENGTH FEET
MATERIAL AND TYPE	DEPTH TO TOP OF SCREEN FEET	

61 PLUGGING & SEALING RECORD

DEPTH SET AT - FEET FROM	DEPTH SET AT - FEET TO	MATERIAL AND TYPE (CEMENT GROUT LEAD PACKER ETC.)

71 PUMPING TEST

PUMPING TEST METHOD: 1 ☐ PUMP 2 ☒ BAILER
PUMPING RATE: 3 GPM
DURATION OF PUMPING: 3 HOURS MINS

STATIC LEVEL	WATER LEVEL END OF PUMPING	WATER LEVELS DURING: 1 ☐ PUMPING 2 ☒ RECOVERY			
		15 MINUTES	30 MINUTES	45 MINUTES	60 MINUTES
57 FEET	112 FEET	FEET	57 FEET	FEET	FEET

IF FLOWING, GIVE RATE: GPM
PUMP INTAKE SET AT: FEET
WATER AT END OF TEST: 1 ☒ CLEAR 2 ☐ CLOUDY
RECOMMENDED PUMP TYPE: ☐ SHALLOW ☒ DEEP
RECOMMENDED PUMP SETTING: 125 FEET
RECOMMENDED PUMPING RATE: 3 GPM

LOCATION OF WELL

IN DIAGRAM BELOW SHOW DISTANCES OF WELL FROM ROAD AND LOT LINE. INDICATE NORTH BY ARROW.

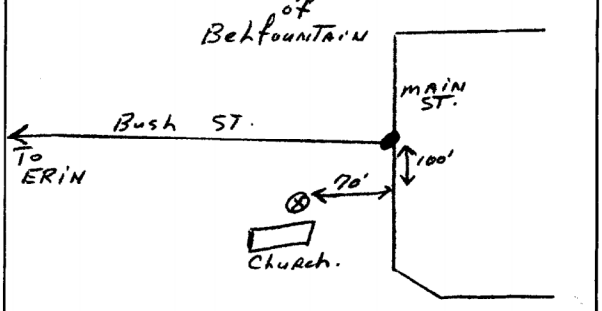

DRILLERS REMARKS: 15808

FINAL STATUS OF WELL

1 ☒ WATER SUPPLY 2 ☐ OBSERVATION WELL 3 ☐ TEST HOLE 4 ☐ RECHARGE WELL 5 ☐ ABANDONED, INSUFFICIENT SUPPLY 6 ☐ ABANDONED, POOR QUALITY 7 ☐ UNFINISHED 9 ☐ DEWATERING

WATER USE

1 ☒ DOMESTIC 2 ☐ STOCK 3 ☐ IRRIGATION 4 ☐ INDUSTRIAL ☐ OTHER 5 ☐ COMMERCIAL 6 ☐ MUNICIPAL 7 ☐ PUBLIC SUPPLY 8 ☐ COOLING OR AIR CONDITIONING 9 ☐ NOT USED

METHOD OF CONSTRUCTION

1 ☒ CABLE TOOL 2 ☐ ROTARY (CONVENTIONAL) 3 ☐ ROTARY (REVERSE) 4 ☐ ROTARY (AIR) 5 ☐ AIR PERCUSSION 6 ☐ BORING 7 ☐ DIAMOND 8 ☐ JETTING 9 ☐ DRIVING ☐ DIGGING ☐ OTHER

CONTRACTOR

NAME OF WELL CONTRACTOR: GRAHAM WELL DRILLING LTD
WELL CONTRACTOR'S LICENCE NUMBER: 2336
ADDRESS: Guelph, ONT.
NAME OF WELL TECHNICIAN: J. HAWKINS
WELL TECHNICIAN'S LICENCE NUMBER:
SIGNATURE OF TECHNICIAN/CONTRACTOR: R Graham
SUBMISSION DATE: DAY 030 MO 08 YR 87

OFFICE USE ONLY

DATA SOURCE | CONTRACTOR | DATE RECEIVED: SEP 14 1987
DATE OF INSPECTION | INSPECTOR
REMARKS

MINISTRY OF THE ENVIRONMENT COPY

FORM NO. 0506 (11/86) FORM 9

TOWN OF CALEDON
PLANNING
RECEIVED
Jul 12, 2021

Ministry of the Environment
Ontario

The Ontario Water Resources Act

WATER WELL RECORD

4907667

1. PRINT ONLY IN SPACES PROVIDED
2. CHECK ☒ CORRECT BOX WHERE APPLICABLE

11

MUNICIP 49002 CON. HS W 105

COUNTY OR DISTRICT: [redacted]

TOWNSHIP, BOROUGH, CITY, TOWN, VILLAGE: OF CALEDON

CON. BLOCK, TRACT, SURVEY, ETC: 5

LOT: 9

[redacted] MAIN ERIN NO3 1TO

DATE COMPLETED: DAY 22 MO 07 YR 92

RC | ELEVATION | RC | BASIN CODE

LOG OF OVERBURDEN AND BEDROCK MATERIALS (SEE INSTRUCTIONS)

GENERAL COLOUR	MOST COMMON MATERIAL	OTHER MATERIALS	GENERAL DESCRIPTION	DEPTH - FEET FROM	DEPTH - FEET TO
BROWN	TOP SOIL			0	1
	SAND + GRAVEL	STONES		1	20
BROWN	CLAY	SAND + GRAVEL + STONES		20	61
RED	SHALE			61	66
BLUE	SHALE			66	103
			TOTAL =		103'
		6" CASING DRIVE SHOE			

31

32

41 WATER RECORD

WATER FOUND AT - FEET	KIND OF WATER
90	1 ☐ FRESH 2 ☐ SALTY 3 ☐ SULPHUR 4 ☐ MINERALS 6 ☐ GAS
103	1 ☐ FRESH 2 ☐ SALTY 3 ☐ SULPHUR 4 ☐ MINERALS 6 ☐ GAS
	1 ☐ FRESH 2 ☐ SALTY 3 ☐ SULPHUR 4 ☐ MINERALS 6 ☐ GAS
	1 ☐ FRESH 2 ☐ SALTY 3 ☐ SULPHUR 4 ☐ MINERALS 6 ☐ GAS
	1 ☐ FRESH 2 ☐ SALTY 3 ☐ SULPHUR 4 ☐ MINERALS 6 ☐ GAS

51 CASING & OPEN HOLE RECORD

INSIDE DIAM INCHES	MATERIAL	WALL THICKNESS INCHES	DEPTH - FEET FROM	DEPTH - FEET TO
6"	1 ☒ STEEL 2 ☐ GALVANIZED 3 ☐ CONCRETE 4 ☐ OPEN HOLE 5 ☐ PLASTIC	.188	0	62
6"	1 ☐ STEEL 2 ☐ GALVANIZED 3 ☐ CONCRETE 4 ☒ OPEN HOLE 5 ☐ PLASTIC		62	103
	1 ☐ STEEL 2 ☐ GALVANIZED 3 ☐ CONCRETE 4 ☐ OPEN HOLE 5 ☐ PLASTIC			

SCREEN

SIZE(S) OF OPENING (SLOT NO.)	DIAMETER INCHES	LENGTH FEET
MATERIAL AND TYPE	DEPTH TO TOP OF SCREEN FEET	

61 PLUGGING & SEALING RECORD

DEPTH SET AT - FEET FROM	DEPTH SET AT - FEET TO	MATERIAL AND TYPE (CEMENT GROUT LEAD PACKER ETC.)
0	10	BENTONITE
		ABANDONED

71 PUMPING TEST

PUMPING TEST METHOD: 1 ☐ PUMP 2 ☐ BAILER — PUMPING RATE: 3 GPM — DURATION OF PUMPING: 1 HOURS ___ MINS

STATIC LEVEL	WATER LEVEL END OF PUMPING	WATER LEVELS DURING (1 ☐ PUMPING 2 ☒ RECOVERY)	15 MINUTES	30 MINUTES	45 MINUTES	60 MINUTES
53.7 FEET	FEET		53.7 FEET	53.7 FEET	53.7 FEET	53.7 FEET

IF FLOWING, GIVE RATE: GPM — PUMP INTAKE SET AT: FEET — WATER AT END OF TEST: 1 ☐ CLEAR 2 ☒ CLOUDY

RECOMMENDED PUMP TYPE: ☐ SHALLOW ☒ DEEP — RECOMMENDED PUMP SETTING: 90 FEET — RECOMMENDED PUMPING RATE: 3 GPM

LOCATION OF WELL

IN DIAGRAM BELOW SHOW DISTANCES OF WELL FROM ROAD AND LOT LINE. INDICATE NORTH BY ARROW.

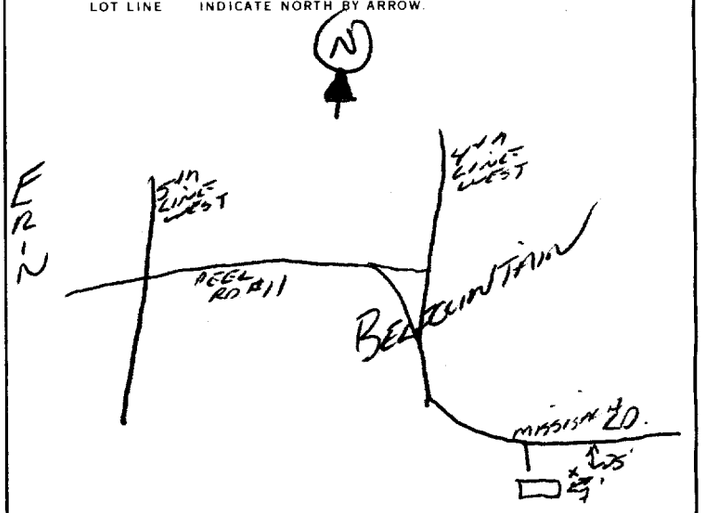

DRILLERS REMARKS: 109397

FINAL STATUS OF WELL
1 ☒ WATER SUPPLY; 2 ☐ OBSERVATION WELL; 3 ☐ TEST HOLE; 4 ☐ RECHARGE WELL; 5 ☐ ABANDONED, INSUFFICIENT SUPPLY; 6 ☐ ABANDONED, POOR QUALITY; 7 ☐ UNFINISHED; ☐ DEWATERING

WATER USE
1 ☒ DOMESTIC; 2 ☐ STOCK; 3 ☐ IRRIGATION; 4 ☐ INDUSTRIAL; ☐ OTHER; 5 ☐ COMMERCIAL; 6 ☐ MUNICIPAL; 7 ☐ PUBLIC SUPPLY; 8 ☐ COOLING OR AIR CONDITIONING; 9 ☐ NOT USED

METHOD OF CONSTRUCTION
1 ☐ CABLE TOOL; 2 ☐ ROTARY (CONVENTIONAL); 3 ☐ ROTARY (REVERSE); 4 ☒ ROTARY (AIR); 5 ☐ AIR PERCUSSION; 6 ☐ BORING; 7 ☐ DIAMOND; 8 ☐ JETTING; 9 ☐ DRIVING; ☐ DIGGING; ☐ OTHER

CONTRACTOR

NAME OF WELL CONTRACTOR: HANNON WELL DRILLING LTD. — WELL CONTRACTOR'S LICENCE NUMBER: 2663

ADDRESS: R.R.#5 GUELPH ONT. N1H 6J2

NAME OF WELL TECHNICIAN: HENRY R HANNON — WELL TECHNICIAN'S LICENCE NUMBER: T-05910

SIGNATURE OF TECHNICIAN/CONTRACTOR — SUBMISSION DATE: DAY 01 MO 08 YR 92

OFFICE USE ONLY

DATA SOURCE — CONTRACTOR: 2663 — DATE RECEIVED: AUG 17 1992

DATE OF INSPECTION — INSPECTOR

REMARKS

MINISTRY OF THE ENVIRONMENT COPY

FORM NO. 0506 (11/86) FORM 9

TOWN OF CALEDON
PLANNING
RECEIVED
JUL 12 2021

Ministry of Environment and Energy
Ontario

The Ontario Water Resources Act
WATER WELL RECORD

Print only in spaces provided.
Mark correct box with a checkmark, where applicable.

11 (1 2) **4908201** Municipality 49002 (10 14) Con. HS W (15) 05 (22 23 24)

County or District [redacted]

Township/Borough/City/Town/Village: Caledon

Con block tract survey, etc.: WHS

Lot: 10 (25 27)

Address: 684 BUSH ST. Caledon

Date completed: day 22 month 04 year 97 (48-53)

Northing | RC | Elevation | RC | Basin Code | ii | iii | iv

LOG OF OVERBURDEN AND BEDROCK MATERIALS (see instructions)

General colour	Most common material	Other materials	General description	Depth – feet From	Depth – feet To
BROWN	Clay	Boulders	DENSE	0	18
BROWN	Clay	STONES	— " —	18	46
BLUE	Clay	STONES	— " —	46	85
Blue	Clay		— " —	85	99
GREY	Lime Stone		HARD	99	131
RED	Shale		HARD	131	168

WATER RECORD

Water found at – feet	Kind of water
110	1 [X] Fresh 2 [ ] Salty 3 [ ] Sulphur 4 [ ] Minerals 5 [ ] Gas
157	1 [X] Fresh 2 [ ] Salty 3 [ ] Sulphur 4 [ ] Minerals 5 [ ] Gas
	1 [ ] Fresh 2 [ ] Salty 3 [ ] Sulphur 4 [ ] Minerals 5 [ ] Gas
	1 [ ] Fresh 2 [ ] Salty 3 [ ] Sulphur 4 [ ] Minerals 5 [ ] Gas
	1 [ ] Fresh 2 [ ] Salty 3 [ ] Sulphur 4 [ ] Minerals 5 [ ] Gas

CASING & OPEN HOLE RECORD

Inside diam inches	Material	Wall thickness inches	Depth – feet From	Depth – feet To
6	1 [X] Steel 2 [ ] Galvanized 3 [ ] Concrete 4 [ ] Open hole 5 [ ] Plastic		0	102
6	1 [ ] Steel 2 [ ] Galvanized 3 [ ] Concrete 4 [X] Open hole 5 [ ] Plastic		102	168
	1 [ ] Steel 2 [ ] Galvanized 3 [ ] Concrete 4 [ ] Open hole 5 [ ] Plastic			

SCREEN

Sizes of opening (Slot No.)	Diameter	Length
	inches	feet

Material and type | Depth at top of screen: feet

PLUGGING & SEALING RECORD

[X] Annular space [ ] Abandonment

Depth set at – feet From	Depth set at – feet To	Material and type (Cement grout, bentonite, etc.)
0	20	Hole plugged and Clay

PUMPING TEST

Pumping test method: 1 [X] Pump 2 [ ] Bailer

Pumping rate: GPM

Duration of pumping: 24 Hours ..... Mins

Water levels during: 1 [X] Pumping 2 [ ] Recovery

Static level	Water level end of pumping	15 minutes	30 minutes	45 minutes	60 minutes
68 feet	114 feet	114 feet	114 feet	114 feet	114 feet

If flowing give rate: GPM

Pump intake set at: 120 feet

Water at end of test: [X] Clear [ ] Cloudy

Recommended pump type: [ ] Shallow [X] Deep

Recommended pump setting: 125 feet

Recommended pump rate: 5 GPM

LOCATION OF WELL

In diagram below show distances of well from road and lot line.
Indicate north by arrow.

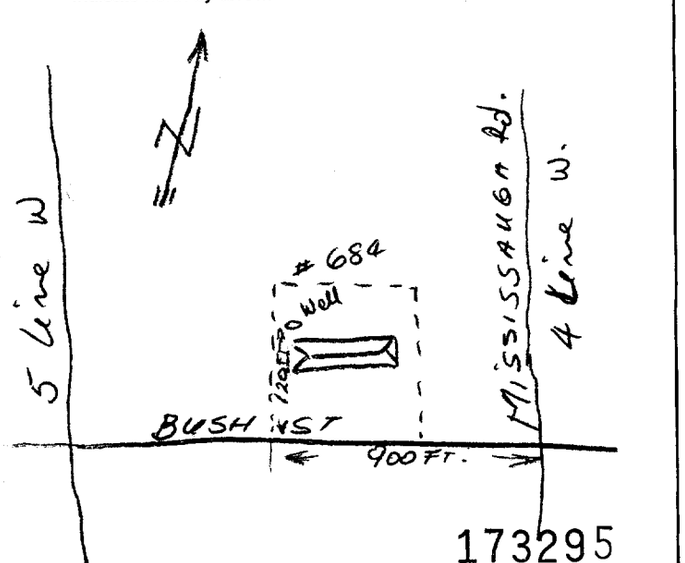

173295

FINAL STATUS OF WELL

1 [X] Water supply 2 [ ] Observation well 3 [ ] Test hole 4 [ ] Recharge well 5 [ ] Abandoned, insufficient supply 6 [ ] Abandoned, poor quality 7 [ ] Abandoned (Other) 8 [ ] Dewatering 9 [ ] Unfinished 10 [ ] Replacement well

WATER USE

1 [X] Domestic 2 [ ] Stock 3 [ ] Irrigation 4 [ ] Industrial 5 [ ] Commercial 6 [ ] Municipal 7 [ ] Public supply 8 [ ] Cooling & air conditioning 9 [ ] Not used 10 [ ] Other .....

METHOD OF CONSTRUCTION

1 [X] Cable tool 2 [ ] Rotary (conventional) 3 [ ] Rotary (reverse) 4 [ ] Rotary (air) 5 [ ] Air percussion 6 [ ] Boring 7 [ ] Diamond 8 [ ] Jetting 9 [ ] Driving 10 [ ] Digging 11 [ ] Other .....

Name of Well Contractor: CONCORD Well Drilling Co. | Well Contractor's Licence No.: 6650

Address: P.O. Box 148 Caledon - Ont. LOMICO

Name of Well Technician: MARKO KIVAC | Well Technician's Licence No.: T-0278

Signature of Technician/Contractor | Submission date: day 24 mo 04 yr 97

MINISTRY USE ONLY

Data source | Comments: 6650 | Date received: MAY 26 1997

Date of inspection | Inspector

Remarks: CSS. S

0506 (07/94) Front Form 9

2 - MINISTRY OF ENVIRONMENT & ENERGY COPY

TOWN OF CALEDON
PLANNING
RECEIVED
Jul 12, 2021

Ministry of Environment and Energy
Ontario

The Ontario Water Resources Act
WATER WELL RECORD

Print only in spaces provided.
Mark correct box with a checkmark, where applicable.

11 (1 2) **4908259** Municipality 49002 (10 14) Con. HS W (15 22 23 24) 05

County or District	Township/Borough/City/Town/Village	Con block tract survey, etc.	Lot (25-27)
[redacted]	BELFOUNTAIN		17211

Address: 17211 OLD MAIN ST BELFOUNTAIN

Date completed (48-53): 25 day 09 month 97 year

21 (1 2) T/M (10) (12 17) Northing (18 24) RC (25) Elevation (26) RC (30) Basin Code (31) ii iii iv (47)

LOG OF OVERBURDEN AND BEDROCK MATERIALS (see instructions)

General colour	Most common material	Other materials	General description	Depth – feet From	Depth – feet To
	TOP SOIL			0	1
BROWN	SANDY GRAVEL	ROCKS		1	15
BROWN	GRAVEL	CLAY		15	42
GREY	CLAY	ROCKS		42	54
RED	SHALE			54	63
GREEN	SHALE			63	105
GREY	LIMESTONE/SHALE			105	129
LIGHT GREY	SANDSTONE			129	142
RED	SHALE			142	149
GREEN	SHALE			149	151
RED	SHALE			151	170

31 (10 14 15 21) 32 (32 43 54 65 75 80)

41 WATER RECORD

Water found at – feet	Kind of water
115 (10-13)	1 ☑ Fresh 2 ☐ Salty 3 ☐ Sulphur 4 ☐ Minerals 6 ☐ Gas (14)
140 (15-18)	1 ☑ Fresh 2 ☐ Salty 3 ☐ Sulphur 4 ☐ Minerals 6 ☐ Gas (19)
170 (20-23)	1 ☑ Fresh 2 ☐ Salty 3 ☐ Sulphur 4 ☐ Minerals 6 ☐ Gas (24)
(25-28)	1 ☐ Fresh 2 ☐ Salty 3 ☐ Sulphur 4 ☐ Minerals 6 ☐ Gas (29)
(30-33)	1 ☐ Fresh 2 ☐ Salty 3 ☐ Sulphur 4 ☐ Minerals 6 ☐ Gas (34) (80)

51 CASING & OPEN HOLE RECORD

Inside diam inches	Material	Wall thickness inches	Depth – feet From	Depth – feet To
6 1/4 (10-11)	1 ☑ Steel (12) 2 ☐ Galvanized 3 ☐ Concrete 4 ☐ Open hole 5 ☐ Plastic	.188	+1'6" (13-16)	58'6"
5" (17-18)	1 ☐ Steel (19) 2 ☐ Galvanized 3 ☐ Concrete 4 ☐ Open hole 5 ☑ Plastic	.250	52'0 (20-23)	170'0
(24-25)	1 ☐ Steel (26) 2 ☐ Galvanized 3 ☐ Concrete 4 ☐ Open hole 5 ☐ Plastic			(27-30)

SCREEN

Sizes of opening (Slot No.) (31-33)	Diameter (34-38) inches	Length (39-40) feet
Material and type	Depth at top of screen (41-44) feet	(30)

61 PLUGGING & SEALING RECORD

☑ Annular space ☐ Abandonment

Depth set at – feet From	Depth set at – feet To	Material and type (Cement grout, bentonite, etc.)
0 (10-13)	25 (14-17)	BENTONITE
(18-21)	(22-25)	
(26-29)	(30-33) (80)	

71 PUMPING TEST

Pumping test method (10): 1 ☑ Pump 2 ☐ Bailer

Pumping rate (11-14): 2½ GPM

Duration of pumping (15-16 Hours, 17-18 Mins): 1 Hours 0 Mins

Water levels during (25): 1 ☑ Pumping 2 ☐ Recovery

Static level (19-21)	Water level end of pumping (22-24)	15 minutes (26-28)	30 minutes (29-31)	45 minutes (32-34)	60 minutes (35-37)
76'1" feet	163'3" feet	113'0 feet	132'1 feet	148'7 feet	163'3 feet

If flowing give rate (38-41): GPM

Pump intake set at: 165 feet

Water at end of test (42): ☑ Clear ☐ Cloudy

Recommended pump type: ☐ Shallow ☑ Deep

Recommended pump setting (43-45): 165' feet

Recommended pump rate (46-49): 2 GPM

(50-53)

LOCATION OF WELL

In diagram below show distances of well from road and lot line. Indicate north by arrow.

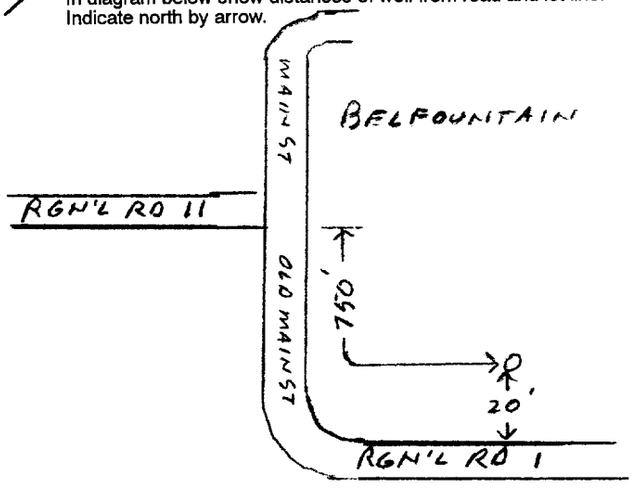

184518

FINAL STATUS OF WELL (54)

1 ☑ Water supply 2 ☐ Observation well 3 ☐ Test hole 4 ☐ Recharge well 5 ☐ Abandoned, insufficient supply 6 ☐ Abandoned, poor quality 7 ☐ Abandoned (Other) 8 ☐ Dewatering 9 ☐ Unfinished 10 ☐ Replacement well

WATER USE (55-56)

1 ☑ Domestic 2 ☐ Stock 3 ☐ Irrigation 4 ☐ Industrial 5 ☐ Commercial 6 ☐ Municipal 7 ☐ Public supply 8 ☐ Cooling & air conditioning 9 ☐ Not used 10 ☐ Other .....

METHOD OF CONSTRUCTION (57)

1 ☐ Cable tool 2 ☑ Rotary (conventional) 3 ☐ Rotary (reverse) 4 ☐ Rotary (air) 5 ☐ Air percussion 6 ☐ Boring 7 ☐ Diamond 8 ☐ Jetting 9 ☐ Driving 10 ☐ Digging 11 ☐ Other .....

Name of Well Contractor: MEADOWBANK DRILLING SERVICES
Well Contractor's Licence No.: 6865

Address: BOX 416 ELORA ONT N0B 1S0

Name of Well Technician: JIM BROADFOOT
Well Technician's Licence No.: T0370

Signature of Technician/Contractor: Jim Broadfoot
Submission date: 09 day 10 mo 97 yr

MINISTRY USE ONLY

Data source (58) | Contractor (59-62): 6865 | Date received (63-68): OCT 20 1997 (80)

Date of inspection | Inspector

Remarks: CSS.S8

0506 (07/94) Front Form 9

2 - MINISTER OF ENVIRONMENT & ENERGY COPY

TOWN OF CALEDON
PLANNING
RECEIVED

Jul 12, 2021

APPENDIX C

Drawdown-Time Curves

TOWN OF CALEDON
PLANNING
RECEIVED

Jul 12, 2021

Drawdown vs Time
TW1-Test Well - 6 Hour Pumping Test

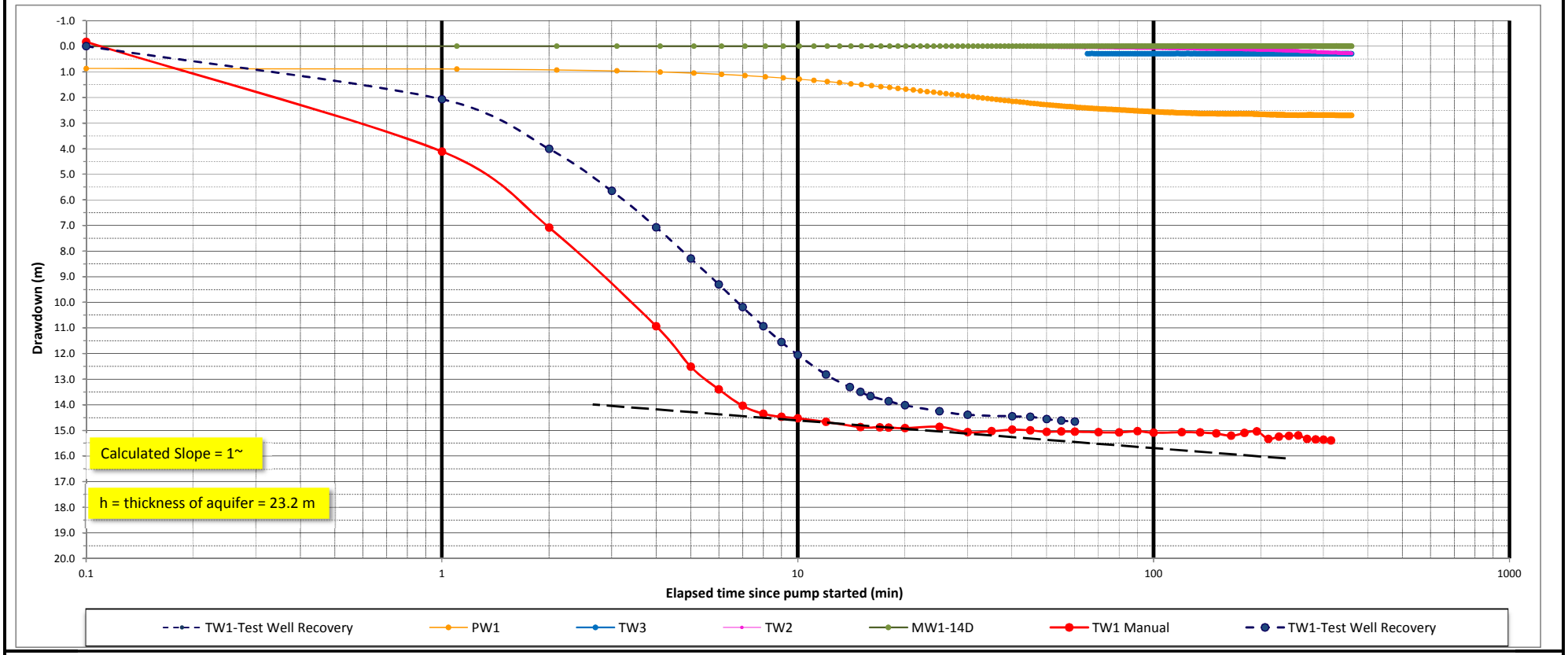

TW1-Test Well - Operation Data

Well Depth = 53.94 m

Static Water Level = 19.19 m below mp

Pumping rate = 0.75 L/s = 45 L/min

Transmissivity (T) = 0.183*Q/Δs = 9.37 m^2/day

Hydraulic Conductivity (k) = T/h = 54.7*10^{-6} m/sec

Drawdown vs. Time - TW1 Pumping Test

Hydrogeology Investigation

Manors of Belfountain

TOWN OF CALEDON
PLANNING
RECEIVED

Jul 12, 2021

Drawdown vs Time
TW2-Test Well - 6 Hour Pumping Test

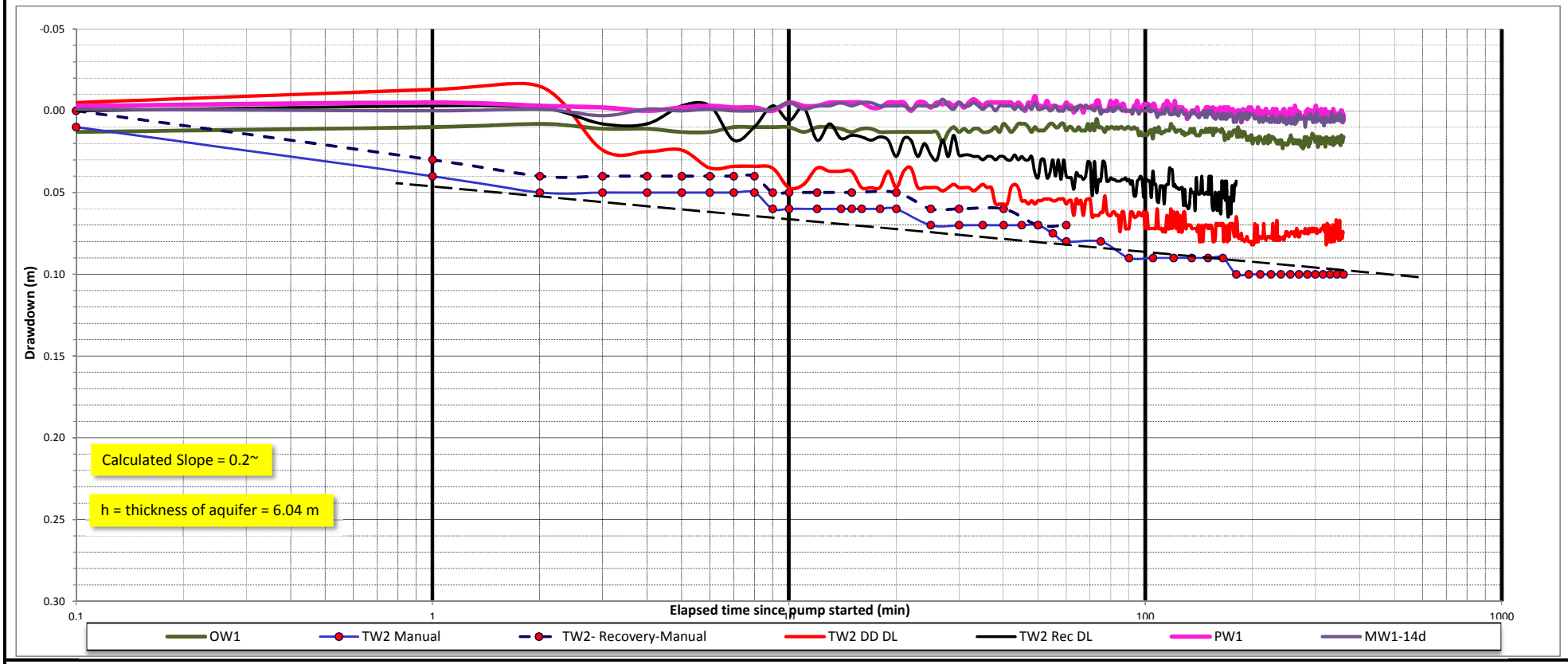

TW2-Test Well - Operation Data

Well Depth = 20.11 m

Static Water Level = 14.07 m below mp

Pumping rate = 0.189 L/s = 11.34 L/min

Transmissivity (T) = 0.183*Q/Δs = 14.94 m^2/day

Hydraulic Conductivity (k) = T/h = $^{2.86E-5}$ m/sec

Drawdown vs. Time - TW2 Pumping Test

Hydrogeology Investigation

Belfountain

TOWN OF CALEDON
PLANNING
RECEIVED

Jul 12, 2021

Drawdown vs Time
TW3-Test Well - 6 Hour Pumping Test

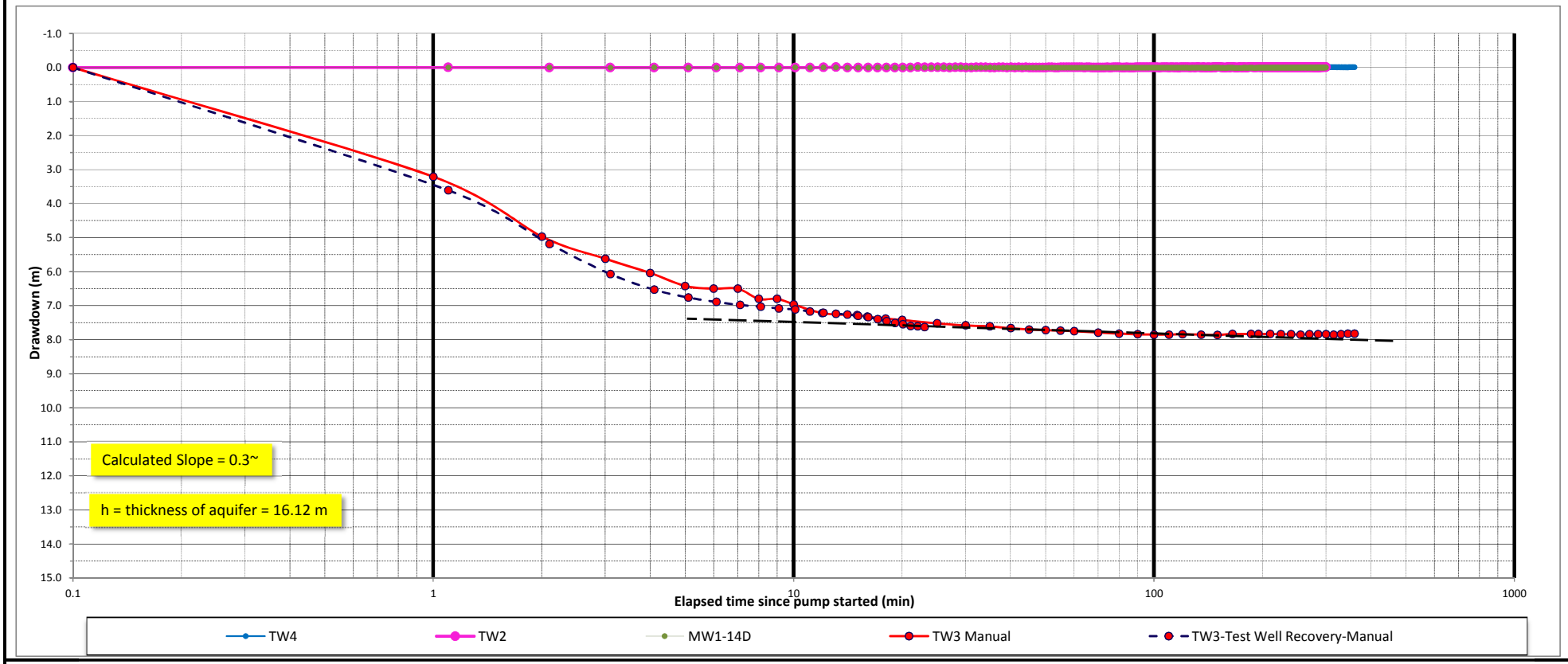

TW3-Test Well - Operation Data

Well Depth = 35.96 m

Static Water Level = 15.80 m below mp

Pumping rate = 1.61 L/s = 96.6 L/min

Transmissivity (T) = 0.183*Q/Δs = 84.85 m^2/day

Hydraulic Conductivity (k) = T/h = 5.26 m/day = $6.1*10^{-5}$ m/sec

Drawdown vs. Time - TW3 Pumping Test

Hydrogeological Investigation

Belfountain

TOWN OF CALEDON
PLANNING
RECEIVED

Jul 12, 2021

Drawdown vs Time
TW4-Test Well - 6 Hour Pumping Test

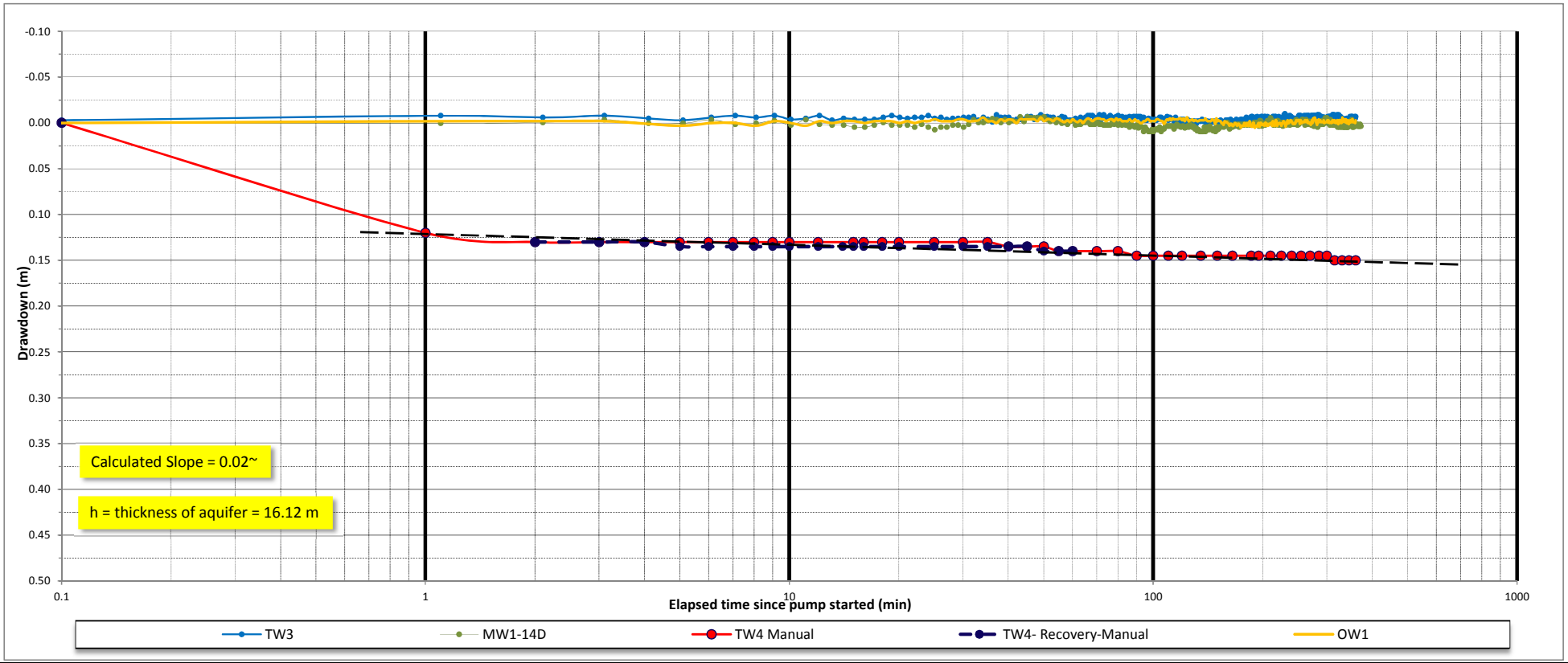

TW4-Test Well - Operation Data

Well Depth = 35.66 m

Static Water Level = 19.56 m below mp

Pumping rate = 0.5 L/s = 30 L/min

Transmissivity (T) = 0.183*Q/Δs = 403 m^2/day

Hydraulic Conductivity (k) = T/h = 2.9*10^{-4} m/sec

Drawdown vs. Time - TW4 Pumping Test

Hydrogeological Investigation

Belfountain

TOWN OF CALEDON
PLANNING
RECEIVED

Jul 12, 2021

Drawdown vs Time
TW5-Test Well - 6 Hour Pumping Test

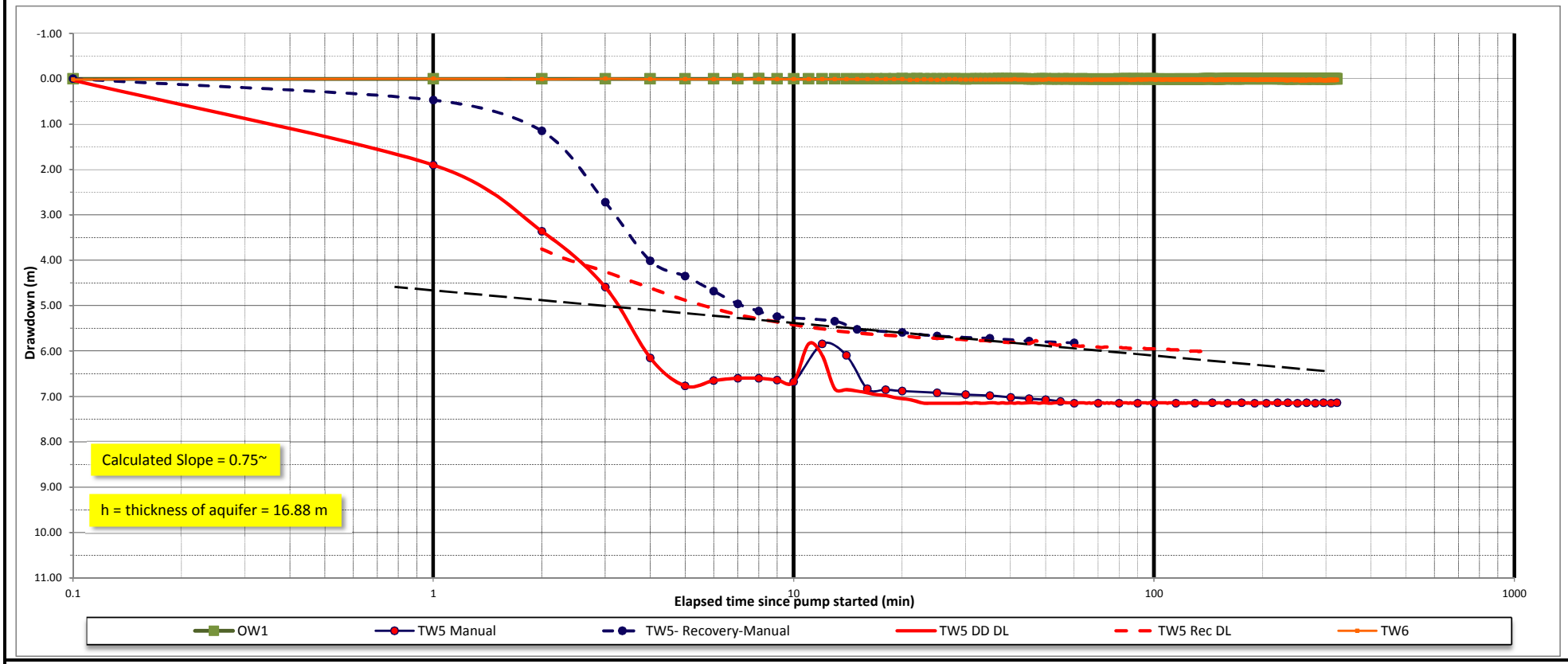

TW5-Test Well - Operation Data

Well Depth = 32.3 m

Static Water Level = 15.34 m below mp

Pumping rate = 1.26 L/s = 16.66 igpm

Transmissivity (T) = 0.183*Q/Δs = 26.60 m^2/day

Hydraulic Conductivity (k) = T/h = 1.83*10^{-5} m/sec

Drawdown vs. Time - TW5 Pumping Test

Hydrogeological Investigation

Belfountain

TOWN OF CALEDON
PLANNING
RECEIVED

Jul 12, 2021

Drawdown vs Time
TW6-Test Well - 6 Hour Pumping Test

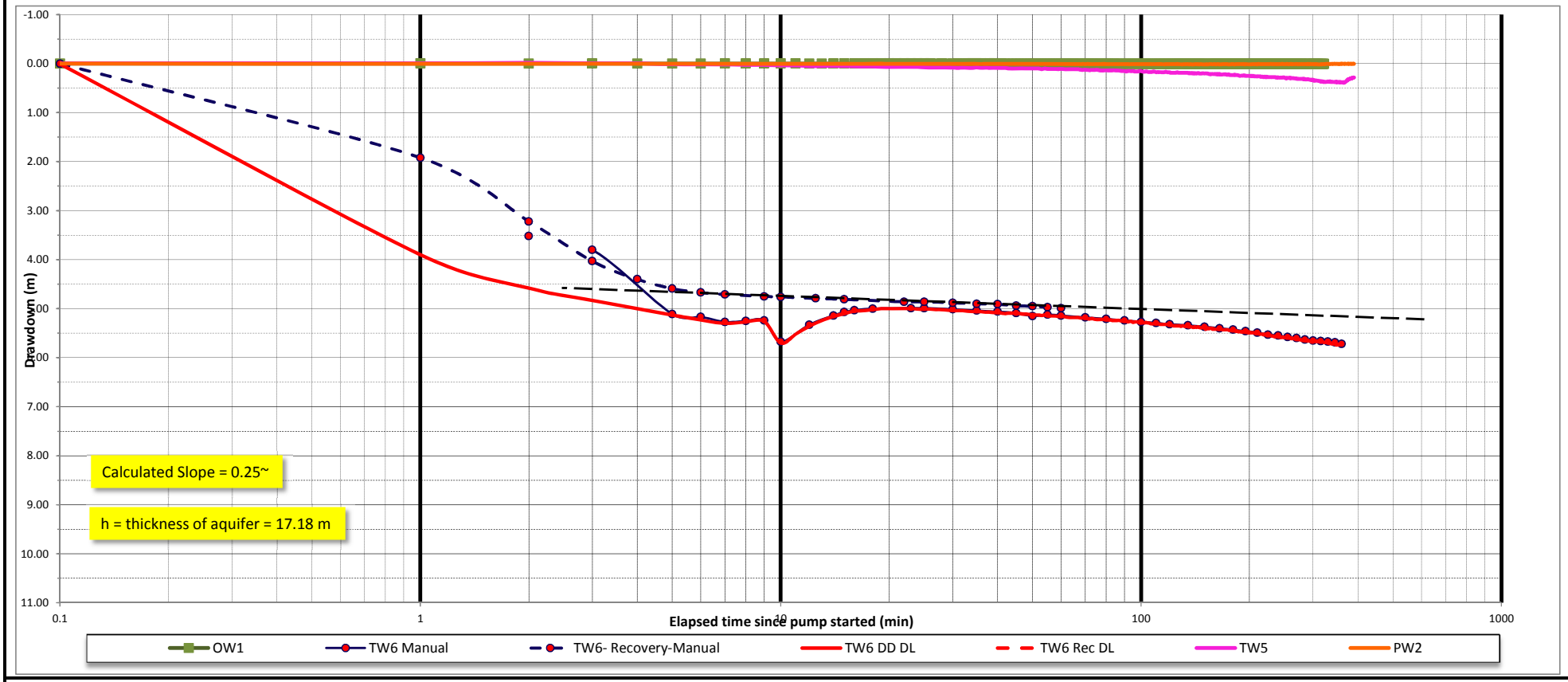

TW6-Test Well - Operation Data

Well Depth = 32.3 m

Static Water Level = 14.69 m below mp

Pumping rate = 1.14 L/s = 68.4 L/min

Transmissivity (T) = 0.183*Q/Δs = 72.10 m^2/day

Hydraulic Conductivity (k) = T/h = 4.86*10^{-5} m/sec

Drawdown vs. Time - TW6 Pumping Test

Hyrogeological Investigation

Belfountain

TOWN OF CALEDON
PLANNING
RECEIVED
Jul 12, 2021

TW5 and TW6
26 Hour Pumping Test
Hydrographs

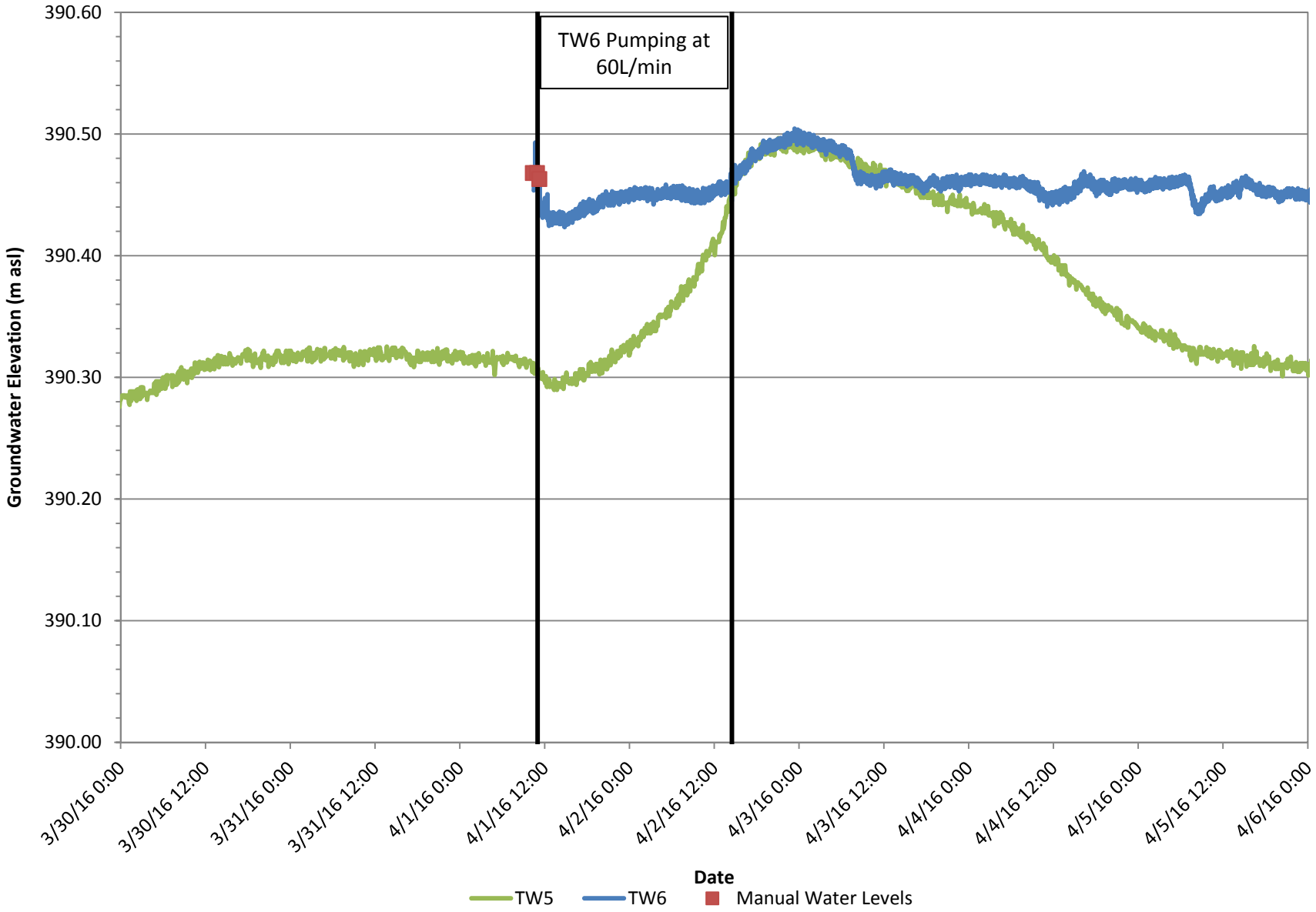

TOWN OF CALEDON
PLANNING
RECEIVED
Jul 12, 2021

TW11
26 Hour Pumping Test
Hydrograph

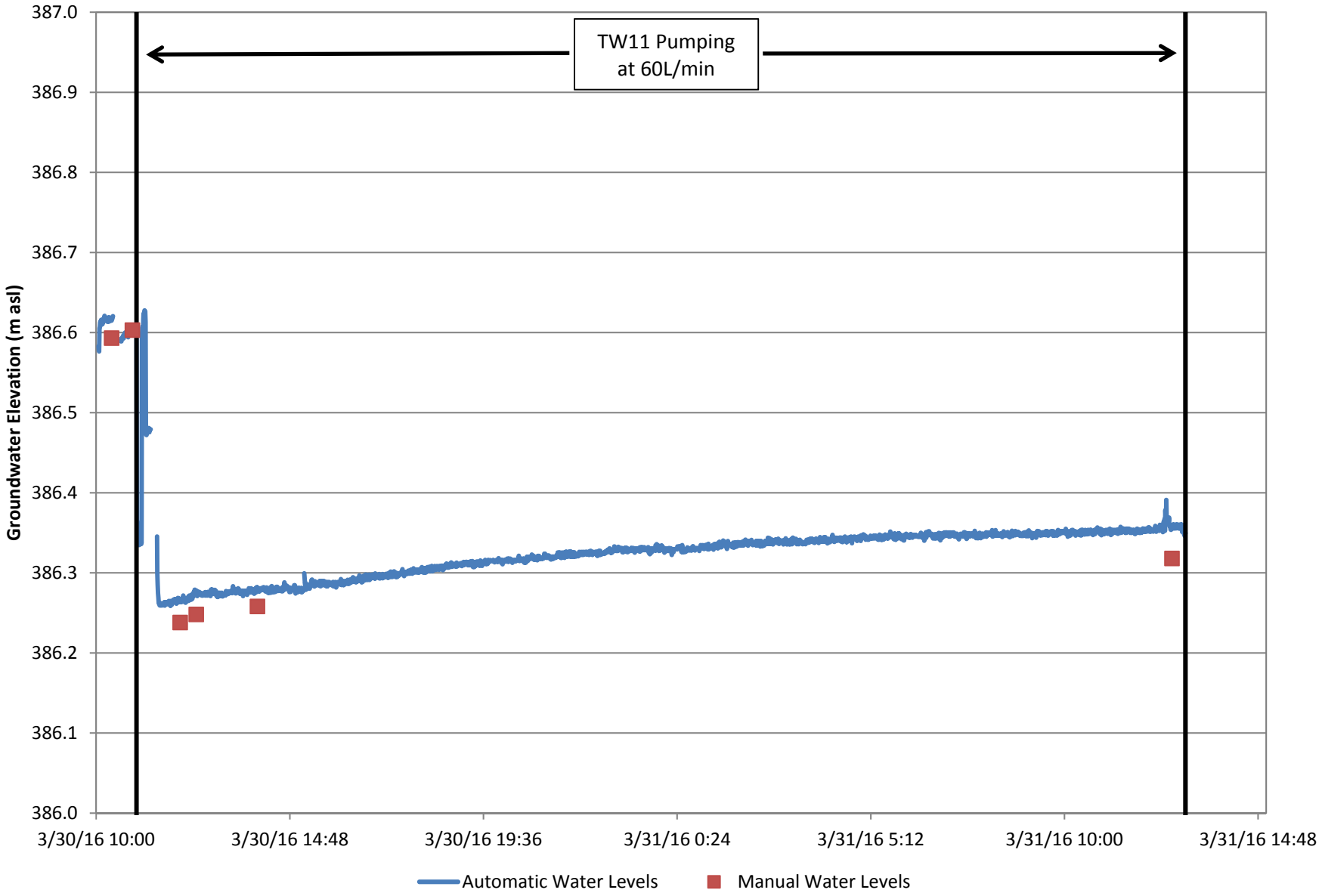

TOWN OF CALEDON
PLANNING
RECEIVED

Jul 12, 2021

APPENDIX D

Infiltration Data

TOWN OF CALEDON
PLANNING
RECEIVED
Jul 12, 2021

Infiltration Test - IT1

Soil Type: Silt, brown, soft, moist, some sand, trace clay
Depth: 0.33 m
Location: Belfountain

Elapsed Time min	Interval Time sec	Interval Time min	Interval Time hour	Readings mm	Infiltration Rate mm/h	Infiltration Rate mm/day
3.42	205	3.42	0.06	10	176	4214.63
6.75	200	3.33	0.06	10	180	4320
10.75	240	4.00	0.07	10	150	3600
15.08	260	4.33	0.07	10	138	3323
18.33	195	3.25	0.05	10	185	4431
21.50	190	3.17	0.05	10	189	4547
25.00	210	3.50	0.06	10	171	4114
28.20	192	3.20	0.05	10	188	4500
31.37	190	3.17	0.05	10	189	4547
34.62	195	3.25	0.05	10	185	4431
37.95	200	3.33	0.06	10	180	4320
41.28	200	3.33	0.06	10	180	4320
44.70	205	3.42	0.06	10	176	4215
48.20	210	3.50	0.06	10	171	4114
51.70	210	3.50	0.06	10	171	4114
55.20	210	3.50	0.06	10	171	4114

TOWN OF CALEDON
PLANNING
RECEIVED
Jul 12, 2017

Infiltration Rate at IT1

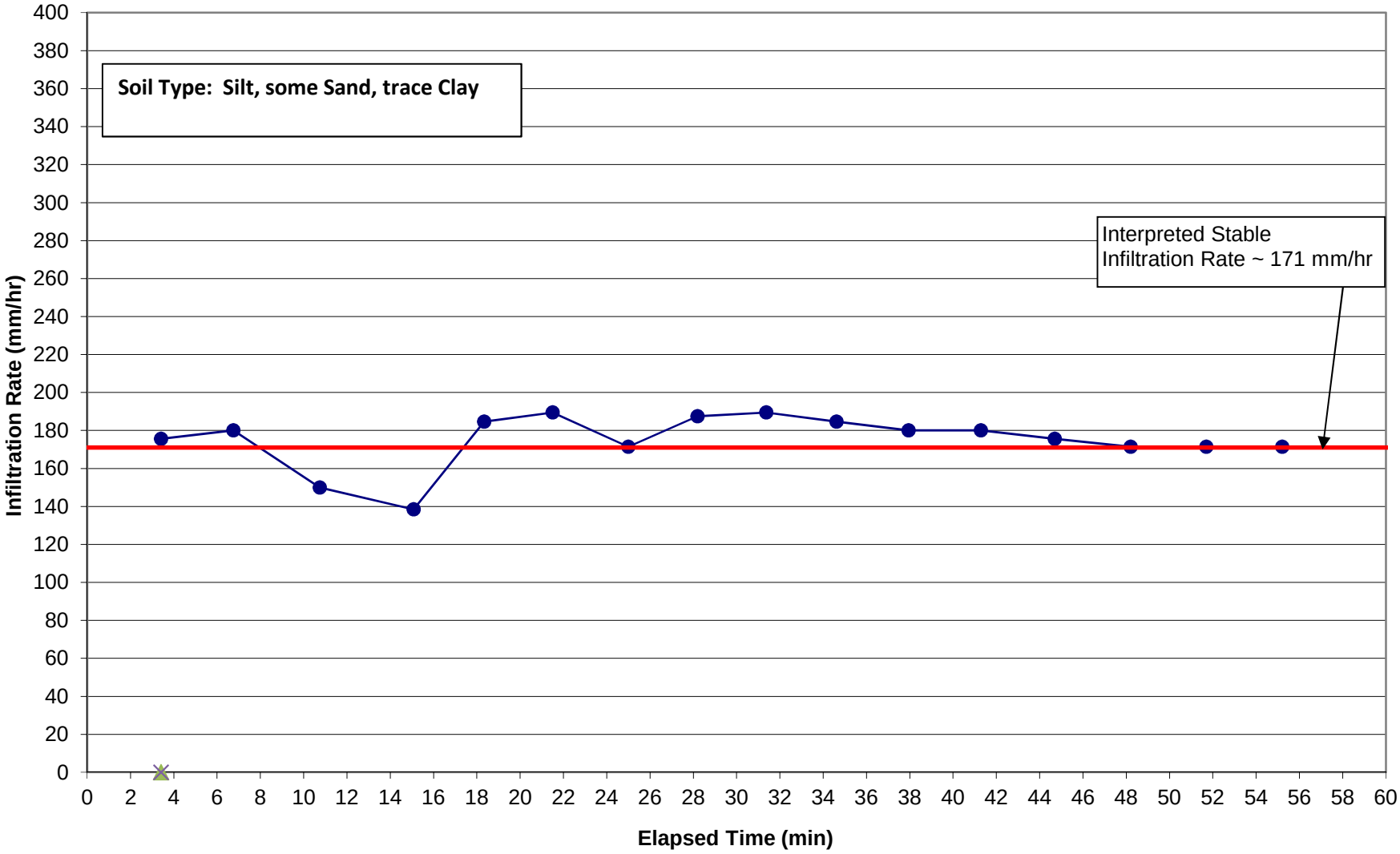

TOWN OF CALEDON
PLANNING
RECEIVED
Jul 12, 2021

Infiltration Test - IT2

Soil Type: Sandy Silt, firm, moist, trace clay, cobbles
Depth: 0.32 m
Location: Belfountain

Elapsed Time min	Interval Time sec	Interval Time min	Interval Time hour	Readings mm	Infiltration Rate mm/h	Infiltration Rate mm/day
1.33	80	1.33	0.02	10	450	10800.00
4.17	170	2.83	0.05	10	212	5082
9.00	290	4.83	0.08	10	124	2979
15.83	410	6.83	0.11	10	88	2107
24.50	520	8.67	0.14	10	69	1662
35.33	650	10.83	0.18	10	55	1329
48.18	771	12.85	0.21	10	47	1121
63.02	890	14.83	0.25	10	40	971
79.82	1008	16.80	0.28	10	36	857
98.65	1130	18.83	0.31	10	32	765
119.57	1255	20.92	0.35	10	29	688
140.52	1257	20.95	0.35	10	29	687
161.47	1257	20.95	0.35	10	29	687
182.37	1254	20.90	0.35	10	29	689
203.30	1256	20.93	0.35	10	29	688
224.25	1257	20.95	0.35	10	29	687

TOWN OF CALEDON
PLANNING
RECEIVED
Jul 12, 2017

Infiltration Rate at IT2

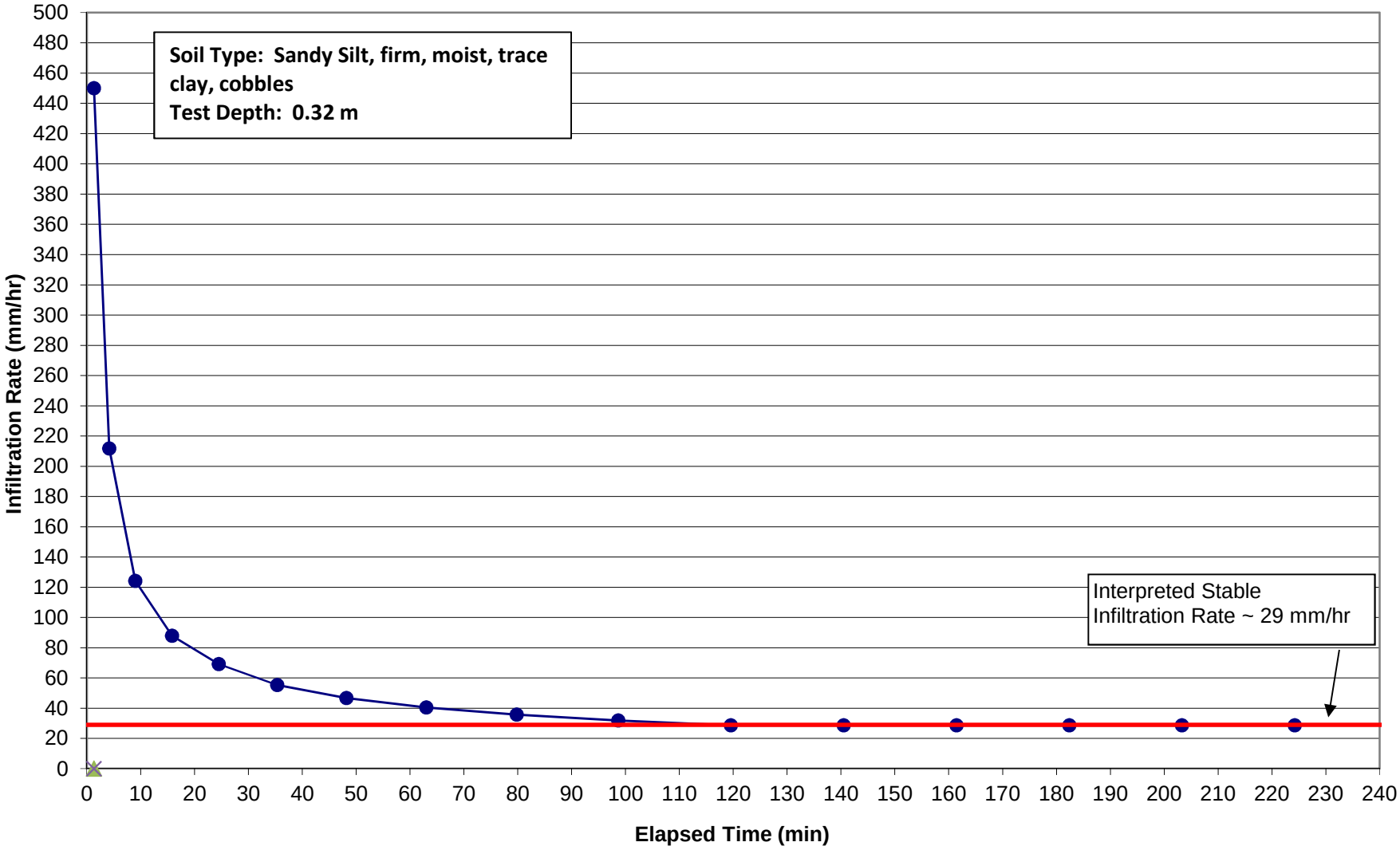

TOWN OF CALEDON
PLANNING
RECEIVED
Jul 12, 2021

Infiltration Test - IT4

Soil Type: Silty Clay, some Sand, cobbles
Depth: 0.36 m
Location: Belfountain

Elapsed Time min	Interval Time sec	Interval Time min	Interval Time hour	Readings mm	Infiltration Rate mm/h	Infiltration Rate mm/day
0.33	20	0.33	0.01	10	1800	43200
0.72	23	0.38	0.01	10	1565	37565
1.33	37	0.62	0.01	10	973	23351
1.97	38	0.63	0.01	10	947	22737
2.67	42	0.70	0.01	10	857	20571
3.55	53	0.88	0.01	10	679	16302
4.67	67	1.12	0.02	10	537	12896
5.83	70	1.17	0.02	10	514	12343
7.00	70	1.17	0.02	10	514	12343
8.23	74	1.23	0.02	10	486	11676
9.57	80	1.33	0.02	10	450	10800
10.90	80	1.33	0.02	10	450	10800
12.32	85	1.42	0.02	10	424	10165
13.82	90	1.50	0.03	10	400	9600
15.40	95	1.58	0.03	10	379	9095
17.07	100	1.67	0.03	10	360	8640
18.90	110	1.83	0.03	10	327	7855
20.73	110	1.83	0.03	10	327	7855
22.57	110	1.83	0.03	10	327	7855

TOWN OF CALEDON
PLANNING
RECEIVED
Jul 12, 2017

Infiltration Rate at IT4

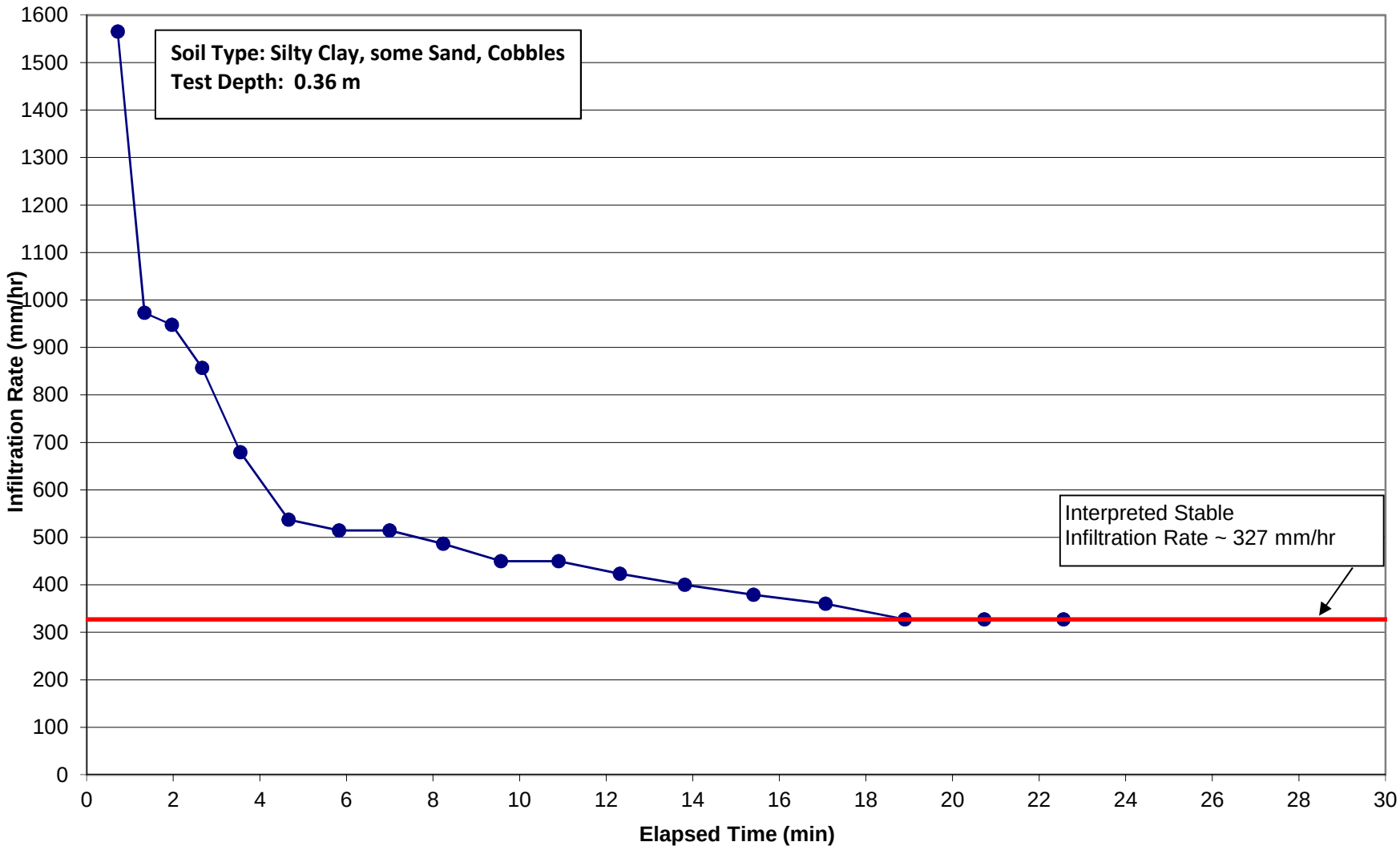

TOWN OF CALEDON
PLANNING
RECEIVED
Jul 12, 2021

Infiltration Test - IT5

Soil Type: Clayey silt Till, soft, wet, some sand, cobbles, boulders
Depth: 0.38 m
Location: Belfountain

Elapsed Time min	Interval Time sec	Interval Time min	Interval Time hour	Readings mm	Infiltration Rate mm/h	Infiltration Rate mm/day
0.55	33	0.55	0.01	10	1091	26182
1.72	70	1.17	0.02	10	514	12343
3.28	94	1.57	0.03	10	383	9191
5.28	120	2.00	0.03	10	300	7200
7.83	153	2.55	0.04	10	235	5647
10.77	176	2.93	0.05	10	205	4909
13.77	180	3.00	0.05	10	200	4800
17.83	244	4.07	0.07	10	148	3541
23.30	328	5.47	0.09	10	110	2634
29.48	371	6.18	0.10	10	97	2329
36.15	400	6.67	0.11	10	90	2160
42.82	400	6.67	0.11	10	90	2160
49.42	396	6.60	0.11	10	91	2182
55.90	389	6.48	0.11	10	93	2221
62.55	399	6.65	0.11	10	90	2165
69.18	398	6.63	0.11	10	90	2171

TOWN OF CALEDON
PLANNING
RECEIVED
Jul 12, 2017

Infiltration Rate at IT5

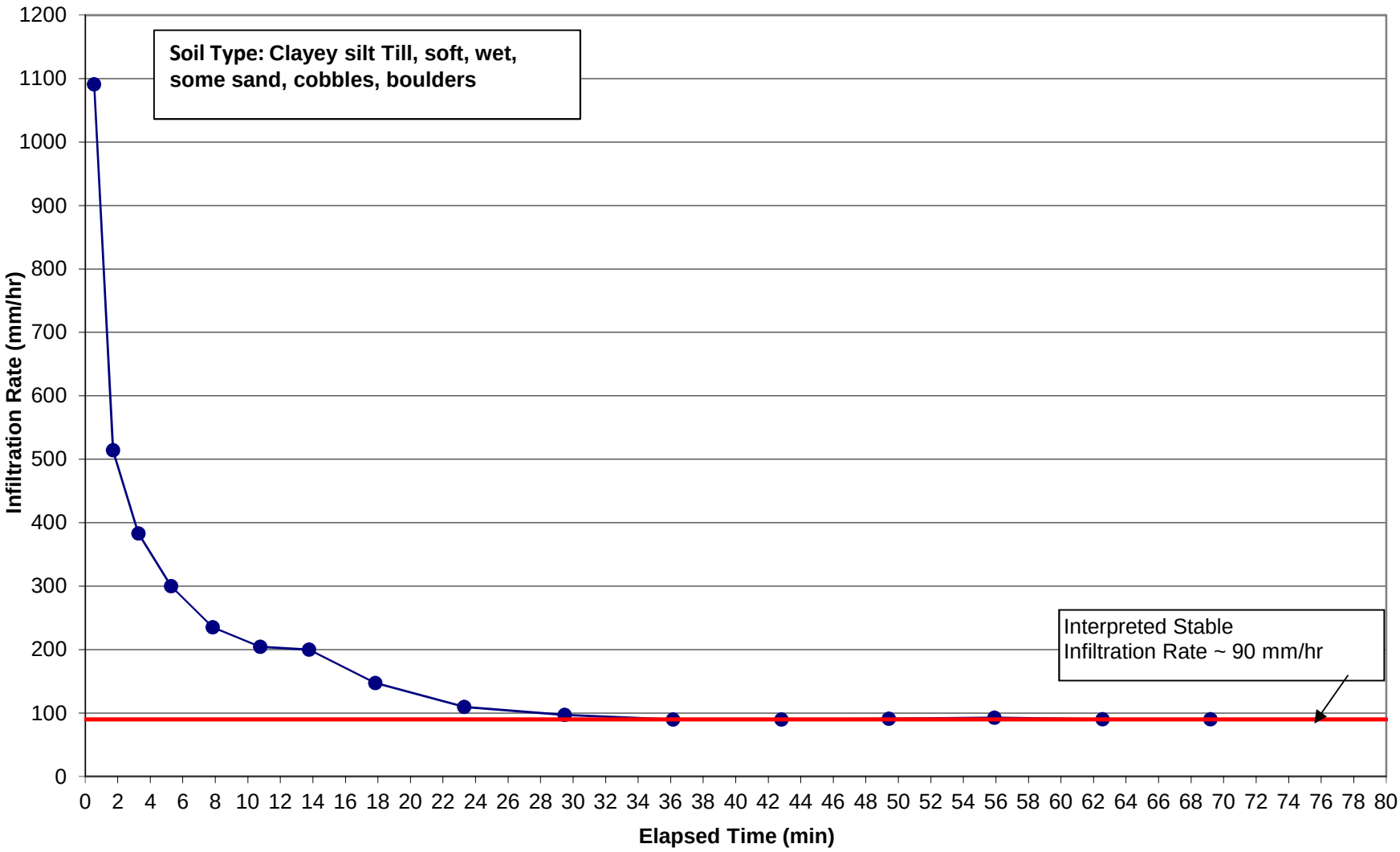

TOWN OF CALEDON
PLANNING
RECEIVED
Jul 12, 2021

Infiltration Test - IP1

Soil Type: Silt, dark brown, soft, moist, some sand, trace clay
Pit Size: 0.60 m x 0.60 m x 0.50 m
Location: Belfountain

Elapsed Time min	Interval Time sec	Interval Time min	Interval Time hour	Readings mm	Infiltration Rate mm/h	Infiltration Rate mm/day
		0.00				
1.92	115	1.92	0.03	10	313	7513
3.92	120	2.00	0.03	10	300	7200
6.08	130	2.17	0.04	10	277	6646
8.60	151	2.52	0.04	10	238	5722
10.85	135	2.25	0.04	10	267	6400
13.27	145	2.42	0.04	10	248	5959
15.93	160	2.67	0.04	10	225	5400
18.50	154	2.57	0.04	10	234	5610
21.50	180	3.00	0.05	10	200	4800
24.92	205	3.42	0.06	10	176	4215
27.25	140	2.33	0.04	10	257	6171
30.00	165	2.75	0.05	10	218	5236
33.00	180	3.00	0.05	10	200	4800
36.00	180	3.00	0.05	10	200	4800
39.00	180	3.00	0.05	10	200	4800

TOWN OF CALEDON
PLANNING
RECEIVED
Jul 12, 2021

Infiltration Rate at IP1

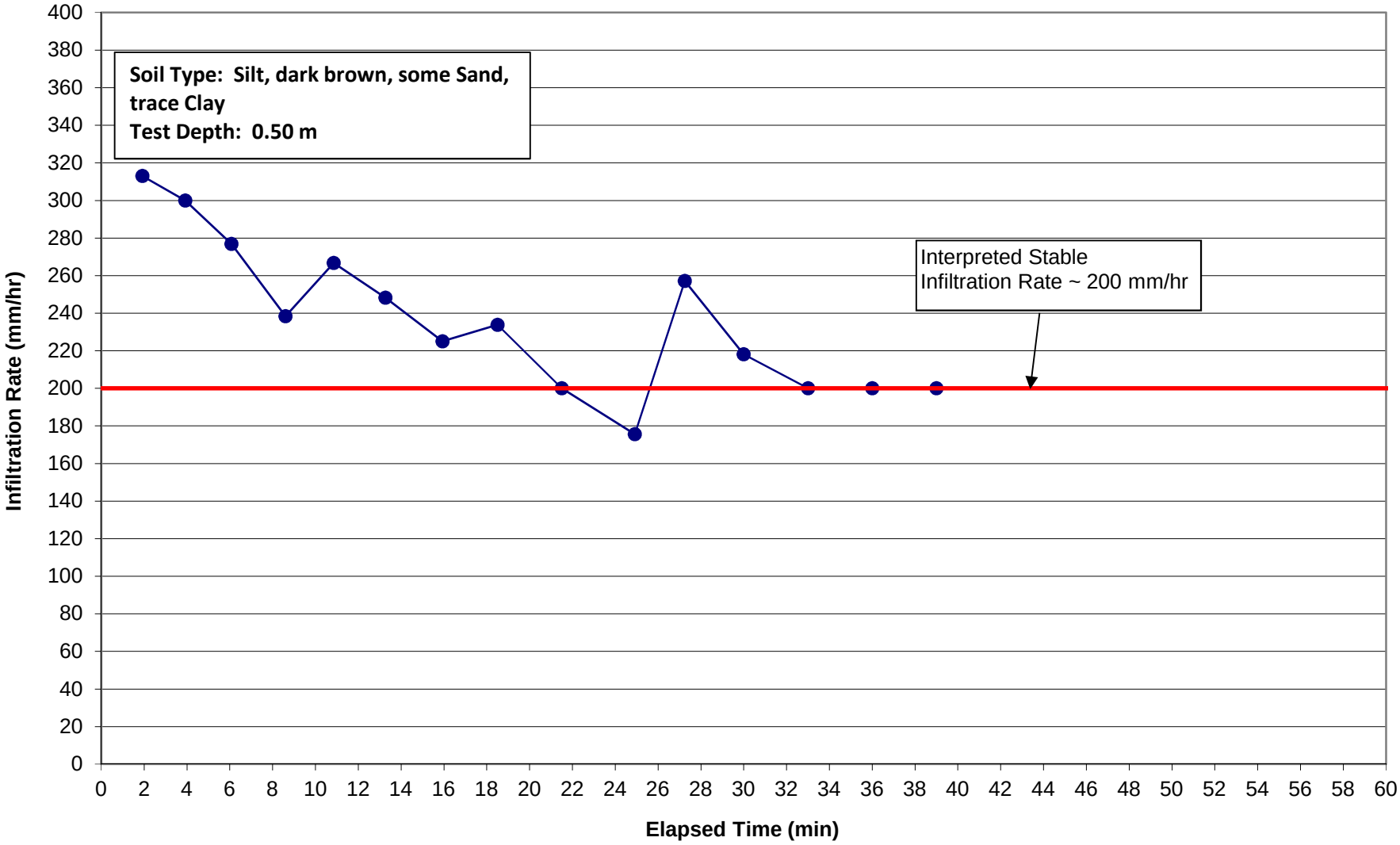

TOWN OF CALEDON
PLANNING
RECEIVED
Jul 12, 2021

Infiltration Test - IP2

Soil Type: clay silt, soft with coarse gravel
Depth: 0.60 m x 0.60 m x 0.50 m
Location: Belfountain

Elapsed Time min	Interval Time sec	Interval Time min	Interval Time hour	Readings mm	Infiltration Rate mm/h	Infiltration Rate mm/day
		0.00				
0.97	58	0.97	0.02	10	621	14897
1.95	59	0.98	0.02	10	610	14644
2.97	61	1.02	0.02	10	590	14164
4.12	69	1.15	0.02	10	522	12522
5.33	73	1.22	0.02	10	493	11836
6.17	50	0.83	0.01	10	720	17280
7.20	62	1.03	0.02	10	581	13935
8.50	78	1.30	0.02	10	462	11077
9.78	77	1.28	0.02	10	468	11221
10.95	70	1.17	0.02	10	514	12343
12.25	78	1.30	0.02	10	462	11077
13.62	82	1.37	0.02	10	439	10537

TOWN OF CALEDON
PLANNING
RECEIVED
Jul 12, 2021

Infiltration Rate at IP2

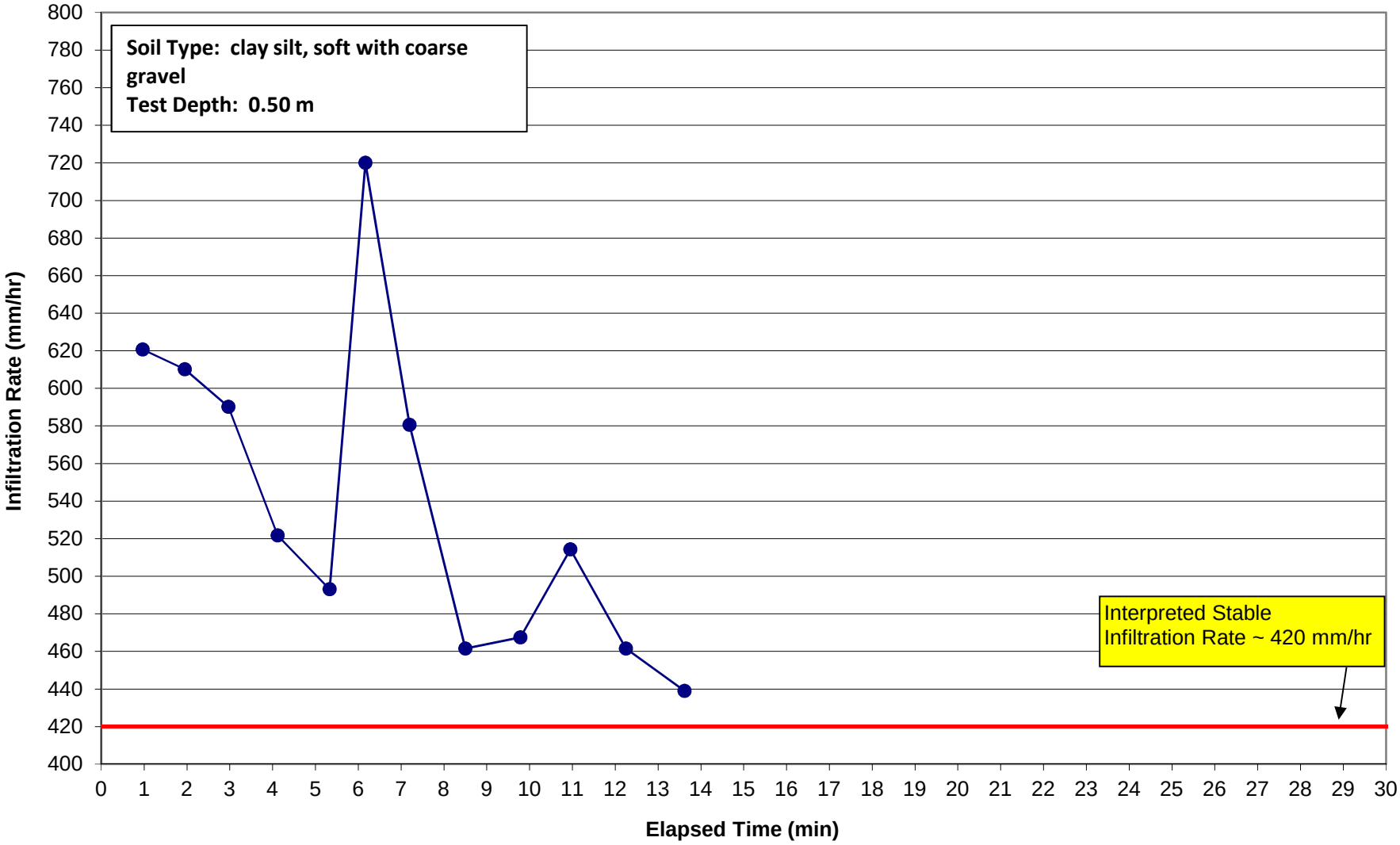

TOWN OF CALEDON
PLANNING
RECEIVED
Jul 12, 2021

Saturated Hydraulic Conductivity Calculation

Project Number:	2017-0646	**Date:**	28-Oct-19
Site Name:	Manors of Belfountain	**Weather:**	16°C, Sunny
COLE Personnel:	Alireza Hejazi	**Precipitation in Previous Two Days:**	No
Test ID:	Test Pit E, Test 1	**Soil Sample ID:**	
Test Pit Easting (m):	579198	**Test Pit Northing (m):**	4848757
Test Depth (m below existing grade):	1 m	**Test Elevation (masl):**	~400.5 masl, ground elevation ~401.5
Soil Description:	Sand, light brown		

Reservoir Type (enter "1" for Combined and "2" for Inner reservoir): 1
Enter water Head Height ("H" in cm): 5
Enter the Borehole Radius ("a" in cm): 5

Enter the soil texture-structure category (enter one of the below numbers): 3

1. Compacted, Structure-less, clayey or silty materials such as landfill caps and liners, lacustrine or marine sediments, etc.
2. Soils which are both fine textured (clayey or silty) and unstructured; may also include some fine sands.
3. Most structured soils from clays through loams; also includes unstructured medium and fine sands. The category most frequently applicable for agricultural soils.
4. Coarse and gravely sands; may also include some highly structured soils with large and/or numerous cracks, macropors, etc

Steady State Rate of Water Level Change ("R" in cm/min): 19.2000

Res Type	35.22
H	5
a	5
H/a	1
a*	0.12
C0.01	0.5931
C0.04	0.6058
C0.12	0.5582
C0.36	0.5582
C	0.5582
R	19.200
Q	11.27
pi	3.1415

$\alpha^* =$ **0.12** *1/cm*

$C =$ **0.558165**

$Q =$ **11.2704** *cm³/sec*

$K_{fs} =$ **1.36E-02** *cm/sec*
8.16E-01 *cm/min*
1.36E-04 *m/sec*
3.21E-01 *inch/min*
5.35E-03 *inch/sec*

$\Phi_m =$ **1.13E-01** *cm²/min*

Input Result

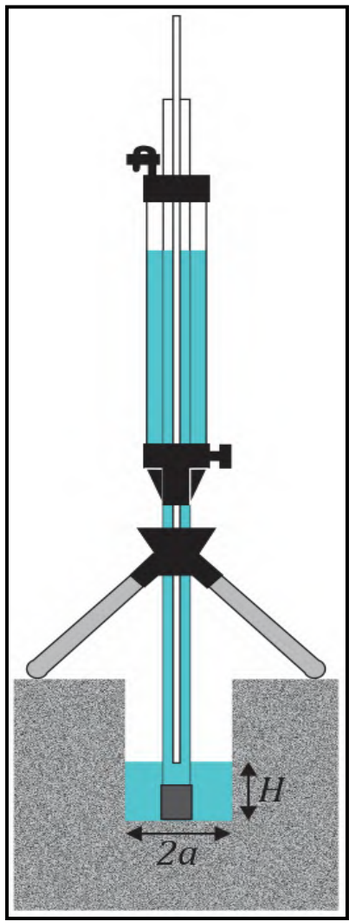

TOWN OF CALEDON
PLANNING
RECEIVED
Jul 12, 2021

Saturated Hydraulic Conductivity Calculation

Project Number:	2017-0646	**Date:**	28-Oct-19
Site Name:	Manors of Belfountain	**Weather:**	16°C, Sunny
CEG Personnel:	Alireza Hejazi	**Precipitation in Previous Two Days:**	No
Test ID:	Test Pit E, Test 2	**Soil Sample ID:**	
Test Pit Easting (m):	579198	**Test Pit Northing (m):**	4848757
Test Depth (m below existing grade):	2 m	**Test Elevation (masl):**	~399.5 masl, ground elevation ~401.5
Soil Description:	Sand, cobbles, brown,dry		

Reservoir Type (enter "1" for Combined and "2" for Inner reservoir): 1
Enter water Head Height ("H" in cm): 5
Enter the Borehole Radius ("a" in cm): 5

Enter the soil texture-structure category (enter one of the below numbers): 3

1. Compacted, Structure-less, clayey or silty materials such as landfill caps and liners, lacustrine or marine sediments, etc.
2. Soils which are both fine textured (clayey or silty) and unstructured; may also include some fine sands.
3. Most structured soils from clays through loams; also includes unstructured medium and fine sands. The category most frequently applicable for agricultural soils.
4. Coarse and gravely sands; may also include some highly structured soils with large and/or numerous cracks, macropors, etc

Steady State Rate of Water Level Change ("R" in cm/min): 18.0000

Res Type	35.22
H	5
a	5
H/a	1
a*	0.12
C0.01	0.5931
C0.04	0.6058
C0.12	0.5582
C0.36	0.5582
C	0.5582
R	18.000
Q	10.566
pi	3.1415

$\alpha^* =$	0.12	*1/cm*
$C =$	0.558165	
$Q =$	10.566	*cm³/sec*
$K_{fs} =$	1.27E-02	*cm/sec*
	7.65E-01	*cm/min*
	1.27E-04	*m/sec*
	3.01E-01	*inch/min*
	5.02E-03	*inch/sec*
$\Phi_m =$	1.06E-01	*cm²/min*

Input Result

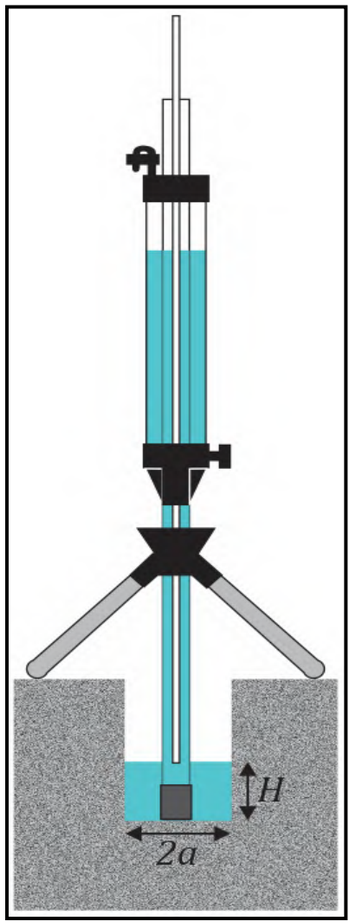

TOWN OF CALEDON
PLANNING
RECEIVED
Jul 12, 2021

Saturated Hydraulic Conductivity Calculation

Project Number:	2017-0646	**Date:**	28-Oct-19
Site Name:	Manors of Belfountain	**Weather:**	16°C, Sunny
CEG Personnel:	Alireza Hejazi	**Precipitation in Previous Two Days:**	No
Test ID:	Test Pit 1, Test 2	**Soil Sample ID:**	
Test Pit Easting (m):	579233	**Test Pit Northing (m):**	4848658
Test Depth (m below existing grade):	2 m	**Test Elevation (masl):**	~397.2 masl, ground elevation ~398.26
Soil Description:	Sand, coarse cobbles and boulders, brown, moist		

Reservoir Type (enter "1" for Combined and "2" for Inner reservoir): 1
Enter water Head Height ("H" in cm): 5
Enter the Borehole Radius ("a" in cm): 5

Enter the soil texture-structure category (enter one of the below numbers): 4

1. Compacted, Structure-less, clayey or silty materials such as landfill caps and liners, lacustrine or marine sediments, etc.
2. Soils which are both fine textured (clayey or silty) and unstructured; may also include some fine sands.
3. Most structured soils from clays through loams; also includes unstructured medium and fine sands. The category most frequently applicable for agricultural soils.
4. Coarse and gravely sands; may also include some highly structured soils with large and/or numerous cracks, macropors, etc

Steady State Rate of Water Level Change ("R" in cm/min): 3.4000

Res Type	35.22
H	5
a	5
H/a	1
a*	0.36
C0.01	0.5931
C0.04	0.6058
C0.12	0.5582
C0.36	0.5582
C	0.5582
R	3.400
Q	1.9958
pi	3.1415

$\alpha^* =$ **0.36** *1/cm*

$C =$ **0.558165**

$Q =$ **1.9958** cm^3/sec

$K_{fs} =$ **3.87E-03** *cm/sec*
2.32E-01 *cm/min*
3.87E-05 *m/sec*
9.13E-02 *inch/min*
1.52E-03 *inch/sec*

$\Phi_m =$ **1.07E-02** cm^2/min

Input Result

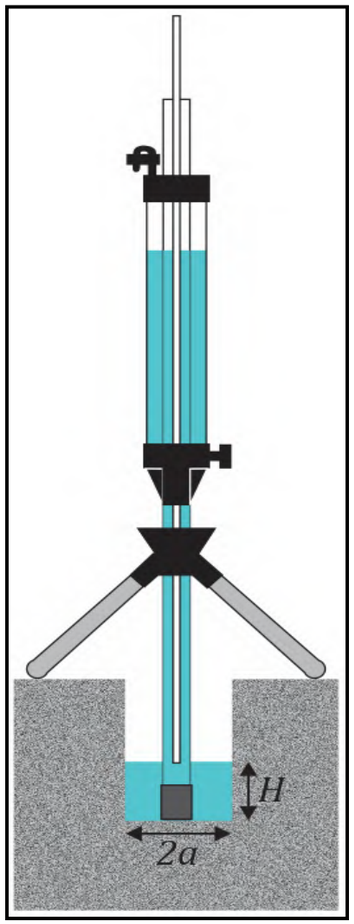

TOWN OF CALEDON
PLANNING
RECEIVED
Jul 12, 2021

Saturated Hydraulic Conductivity Calculation

Project Number:	2017-0646	**Date:**	28-Oct-19
Site Name:	Manors of Belfountain	**Weather:**	16°C, Sunny
CEG Personnel:	Alireza Hejazi	**Precipitation in Previous Two Days:**	No
Test ID:	Test Pit 1, Test 1	**Soil Sample ID:**	
Test Pit Easting (m):	579233	**Test Pit Northing (m):**	4848658
Test Depth (m below existing grade):	1 m	**Test Elevation (masl):**	~397.2 masl, ground elevation ~398.26
Soil Description:	Sand, silt and clay, light brown		

Reservoir Type (enter "1" for Combined and "2" for Inner reservoir): 1
Enter water Head Height ("H" in cm): 5
Enter the Borehole Radius ("a" in cm): 3

Enter the soil texture-structure category (enter one of the below numbers): 3

1. Compacted, Structure-less, clayey or silty materials such as landfill caps and liners, lacustrine or marine sediments, etc.
2. Soils which are both fine textured (clayey or silty) and unstructured; may also include some fine sands.
3. Most structured soils from clays through loams; also includes unstructured medium and fine sands. The category most frequently applicable for agricultural soils.
4. Coarse and gravely sands; may also include some highly structured soils with large and/or numerous cracks, macropors, etc

Steady State Rate of Water Level Change ("R" in cm/min): 1.8000

Res Type	35.22
H	5
a	3
H/a	1.6667
a*	0.12
C0.01	0.8101
C0.04	0.8421
C0.12	0.8032
C0.36	0.8032
C	0.8032
R	1.800
Q	1.0566
pi	3.1415

$\alpha^* =$ **0.12** *1/cm*

$C =$ **0.803154**

$Q =$ **1.0566** cm^3/sec

$K_{fs} =$ **1.92E-03** *cm/sec*
1.15E-01 *cm/min*
1.92E-05 *m/sec*
4.54E-02 *inch/min*
7.57E-04 *inch/sec*

$\Phi_m =$ **1.60E-02** cm^2/min

Input Result

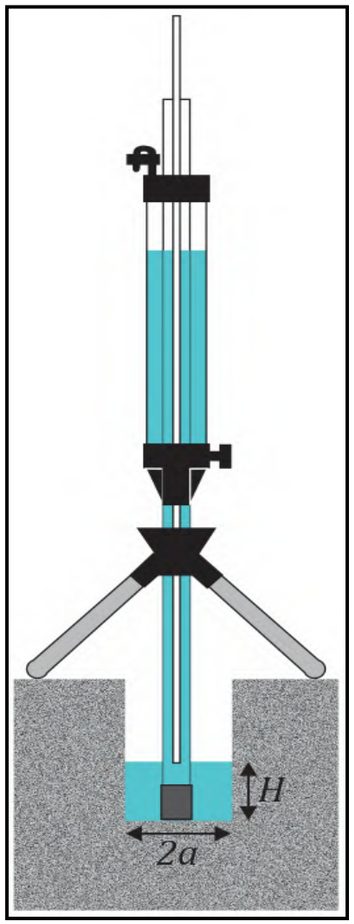

TOWN OF CALEDON
PLANNING
RECEIVED
Jul 12, 2021

Saturated Hydraulic Conductivity Calculation

Project Number:	2017-0646	**Date:**	28-Oct-19
Site Name:	Manors of Belfountain	**Weather:**	16°C, Sunny
CEG Personnel:	Alireza Hejazi	**Precipitation in Previous Two Days:**	No
Test ID:	Test Pit 4, Test 1	**Soil Sample ID:**	
Test Pit Easting (m):	579249	**Test Pit Northing (m):**	4848525
Test Depth (m below existing grade):	1 m	**Test Elevation (masl):**	~399.1 masl, ground elevation ~400.1
Soil Description:	Sand, some clay, brown		

Reservoir Type (enter "1" for Combined and "2" for Inner reservoir): 1
Enter water Head Height ("H" in cm): 5
Enter the Borehole Radius ("a" in cm): 4

Enter the soil texture-structure category (enter one of the below numbers): 3

1. Compacted, Structure-less, clayey or silty materials such as landfill caps and liners, lacustrine or marine sediments, etc.
2. Soils which are both fine textured (clayey or silty) and unstructured; may also include some fine sands.
3. Most structured soils from clays through loams; also includes unstructured medium and fine sands. The category most frequently applicable for agricultural soils.
4. Coarse and gravely sands; may also include some highly structured soils with large and/or numerous cracks, macropors, etc

Steady State Rate of Water Level Change ("R" in cm/min): 4.2000

Res Type	35.22
H	5
a	4
H/a	1.25
a*	0.12
C0.01	0.6805
C0.04	0.7003
C0.12	0.6551
C0.36	0.6551
C	0.6551
R	4.200
Q	2.4654
pi	3.1415

$\alpha^* =$ **0.12** *1/cm*

$C =$ **0.655146**

$Q =$ **2.4654** *cm³/sec*

$K_{fs} =$ **3.58E-03** *cm/sec*
2.15E-01 *cm/min*
3.58E-05 *m/sec*
8.44E-02 *inch/min*
1.41E-03 *inch/sec*

$\Phi_m =$ **2.98E-02** *cm²/min*

Input Result

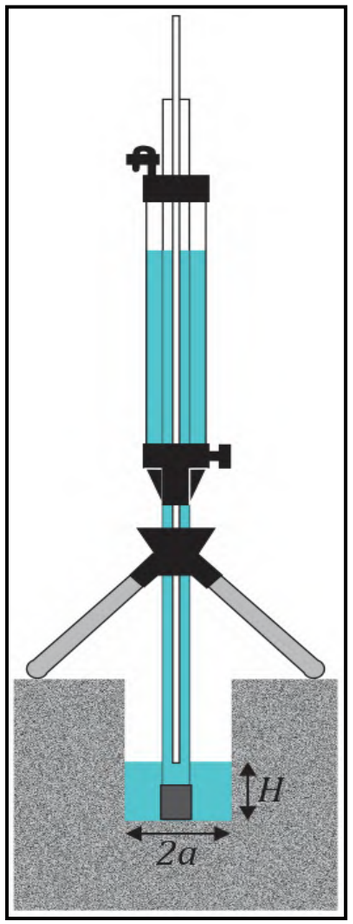

TOWN OF CALEDON
PLANNING
RECEIVED
Jul 12, 2021

Saturated Hydraulic Conductivity Calculation

Project Number:	2017-0646	**Date:**	28-Oct-19
Site Name:	Manors of Belfountain	**Weather:**	16°C, Sunny
CEG Personnel:	Alireza Hejazi	**Precipitation in Previous Two Days:**	No
Test ID:	Test Pit 4, Test 2	**Soil Sample ID:**	
Test Pit Easting (m):	579249	**Test Pit Northing (m):**	4848525
Test Depth (m below existing grade):	2 m	**Test Elevation (masl):**	~398.1 masl, ground elevation ~400.1
Soil Description:	Sand and gravel, boulders and cobbles, brown, moist		

Reservoir Type (enter "1" for Combined and "2" for Inner reservoir): 1
Enter water Head Height ("H" in cm): 5
Enter the Borehole Radius ("a" in cm): 5

Enter the soil texture-structure category (enter one of the below numbers): 4

1. Compacted, Structure-less, clayey or silty materials such as landfill caps and liners, lacustrine or marine sediments, etc.
2. Soils which are both fine textured (clayey or silty) and unstructured; may also include some fine sands.
3. Most structured soils from clays through loams; also includes unstructured medium and fine sands. The category most frequently applicable for agricultural soils.
4. Coarse and gravely sands; may also include some highly structured soils with large and/or numerous cracks, macropors, etc

Steady State Rate of Water Level Change ("R" in cm/min): 2.4000

Res Type	35.22
H	5
a	5
H/a	1
a*	0.36
C0.01	0.5931
C0.04	0.6058
C0.12	0.5582
C0.36	0.5582
C	0.5582
R	2.400
Q	1.4088
pi	3.1415

$\alpha^* =$ **0.36** *1/cm*

$C =$ **0.558165**

$Q =$ **1.4088** cm^3/sec

$K_{fs} =$ **2.73E-03** *cm/sec*
1.64E-01 *cm/min*
2.73E-05 *m/sec*
6.45E-02 *inch/min*
1.07E-03 *inch/sec*

$\Phi_m =$ **7.58E-03** cm^2/min

Input Result

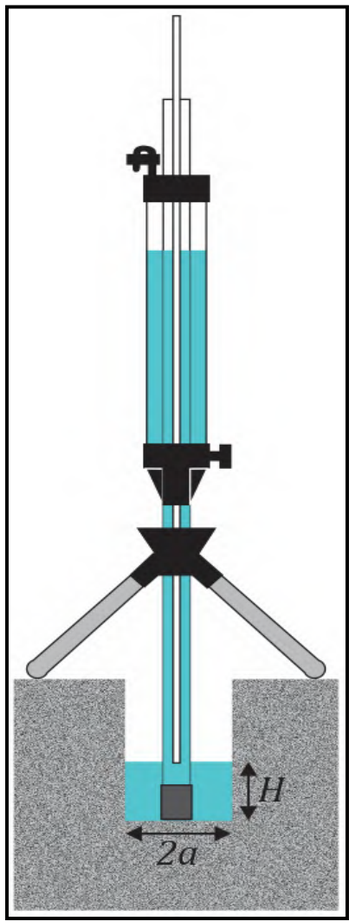

TOWN OF CALEDON
PLANNING
RECEIVED
Jul 12, 2021

Saturated Hydraulic Conductivity Calculation

Project Number:	2017-0646	**Date:**	28-Oct-19
Site Name:	Manors of Belfountain	**Weather:**	16°C, Sunny
CEG Personnel:	Alireza Hejazi	**Precipitation in Previous Two Days:**	No
Test ID:	Test Pit A, Test 1	**Soil Sample ID:**	
Test Pit Easting (m):	579447	**Test Pit Northing (m):**	4848596
Test Depth (m below existing grade):	1 m	**Test Elevation (masl):**	~400.2 masl, ground elevation ~401.2
Soil Description:	Silty clay, some sand, boulders and cobbles, light brown, moist		

Reservoir Type (enter "1" for Combined and "2" for Inner reservoir): 1
Enter water Head Height ("H" in cm): 5
Enter the Borehole Radius ("a" in cm): 3

Enter the soil texture-structure category (enter one of the below numbers): 2

1. Compacted, Structure-less, clayey or silty materials such as landfill caps and liners, lacustrine or marine sediments, etc.
2. Soils which are both fine textured (clayey or silty) and unstructured; may also include some fine sands.
3. Most structured soils from clays through loams; also includes unstructured medium and fine sands. The category most frequently applicable for agricultural soils.
4. Coarse and gravely sands; may also include some highly structured soils with large and/or numerous cracks, macropors, etc

Steady State Rate of Water Level Change ("R" in cm/min): 0.8000

Res Type	35.22
H	5
a	3
H/a	1.6667
a*	0.04
C0.01	0.8101
C0.04	0.8421
C0.12	0.8032
C0.36	0.8032
C	0.8421
R	0.800
Q	0.4696
pi	3.1415

$\alpha^* =$ **0.04** *1/cm*

$C =$ **0.842059**

$Q =$ **0.4696** cm^3/sec

$K_{fs} =$ **4.09E-04** *cm/sec*
2.46E-02 *cm/min*
4.09E-06 *m/sec*
9.67E-03 *inch/min*
1.61E-04 *inch/sec*

$\Phi_m =$ **1.02E-02** cm^2/min

Input Result

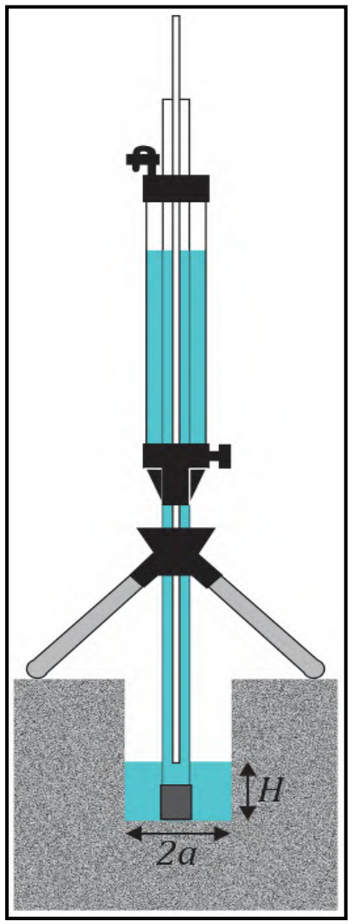

TOWN OF CALEDON
PLANNING
RECEIVED
Jul 12, 2021

Saturated Hydraulic Conductivity Calculation

Project Number:	2017-0646	**Date:**	28-Oct-19
Site Name:	Manors of Belfountain	**Weather:**	16°C, Sunny
CEG Personnel:	Alireza Hejazi	**Precipitation in Previous Two Days:**	No
Test ID:	Test Pit A, Test 2	**Soil Sample ID:**	
Test Pit Easting (m):	579447	**Test Pit Northing (m):**	4848596
Test Depth (m below existing grade):	2 m	**Test Elevation (masl):**	~399.2 masl, ground elevation ~401.2
Soil Description:	Sand and gravel, boulders and cobbles, light brown, dry		

Reservoir Type (enter "1" for Combined and "2" for Inner reservoir): 1
Enter water Head Height ("H" in cm): 5
Enter the Borehole Radius ("a" in cm): 5

Enter the soil texture-structure category (enter one of the below numbers): 4

1. Compacted, Structure-less, clayey or silty materials such as landfill caps and liners, lacustrine or marine sediments, etc.
2. Soils which are both fine textured (clayey or silty) and unstructured; may also include some fine sands.
3. Most structured soils from clays through loams; also includes unstructured medium and fine sands. The category most frequently applicable for agricultural soils.
4. Coarse and gravely sands; may also include some highly structured soils with large and/or numerous cracks, macropors, etc

Steady State Rate of Water Level Change ("R" in cm/min): 1.2000

Res Type	35.22
H	5
a	5
H/a	1
a*	0.36
C0.01	0.5931
C0.04	0.6058
C0.12	0.5582
C0.36	0.5582
C	0.5582
R	1.200
Q	0.7044
pi	3.1415

$\alpha^* =$ **0.36** *1/cm*

$C =$ **0.558165**

$Q =$ **0.7044** cm^3/sec

$K_{fs} =$ **1.36E-03** *cm/sec*
8.19E-02 *cm/min*
1.36E-05 *m/sec*
3.22E-02 *inch/min*
5.37E-04 *inch/sec*

$\Phi_m =$ **3.79E-03** cm^2/min

Input Result

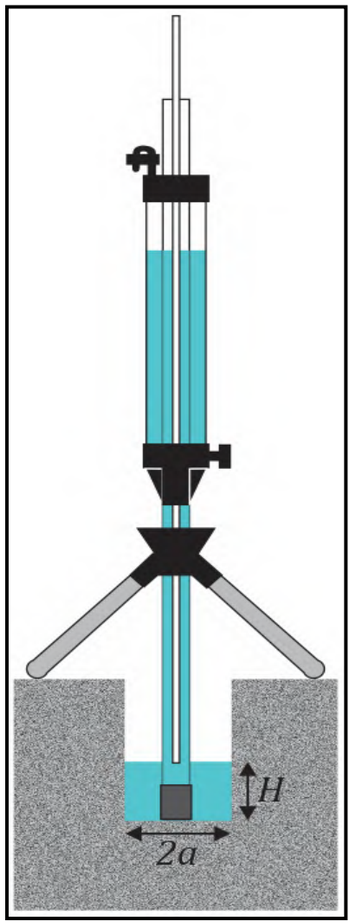

TOWN OF CALEDON
PLANNING
RECEIVED
Jul 12, 2021

Saturated Hydraulic Conductivity Calculation

Project Number:	2017-0646	**Date:**	28-Oct-19
Site Name:	Manors of Belfountain	**Weather:**	16°C, Sunny
CEG Personnel:	Alireza Hejazi	**Precipitation in Previous Two Days:**	No
Test ID:	Test Pit B, Test 1	**Soil Sample ID:**	
Test Pit Easting (m):	579657	**Test Pit Northing (m):**	4848654
Test Depth (m below existing grade):	1 m	**Test Elevation (masl):**	~400.7 masl, ground elevation ~401.7
Soil Description:	Sand, light brown, moist		

Reservoir Type (enter "1" for Combined and "2" for Inner reservoir): 1
Enter water Head Height ("H" in cm): 5
Enter the Borehole Radius ("a" in cm): 3

Enter the soil texture-structure category (enter one of the below numbers): 3

1. Compacted, Structure-less, clayey or silty materials such as landfill caps and liners, lacustrine or marine sediments, etc.
2. Soils which are both fine textured (clayey or silty) and unstructured; may also include some fine sands.
3. Most structured soils from clays through loams; also includes unstructured medium and fine sands. The category most frequently applicable for agricultural soils.
4. Coarse and gravely sands; may also include some highly structured soils with large and/or numerous cracks, macropors, etc

Steady State Rate of Water Level Change ("R" in cm/min): 6.9000

Res Type	35.22
H	5
a	3
H/a	1.6667
a*	0.12
C0.01	0.8101
C0.04	0.8421
C0.12	0.8032
C0.36	0.8032
C	0.8032
R	6.900
Q	4.0503
pi	3.1415

$\alpha^* =$	**0.12**	*1/cm*
$C =$	**0.803154**	
$Q =$	**4.0503**	*cm^3/sec*
$K_{fs} =$	**7.37E-03**	*cm/sec*
	4.42E-01	*cm/min*
	7.37E-05	*m/sec*
	1.74E-01	*inch/min*
	2.90E-03	*inch/sec*
$\Phi_m =$	**6.14E-02**	*cm^2/min*

Input Result

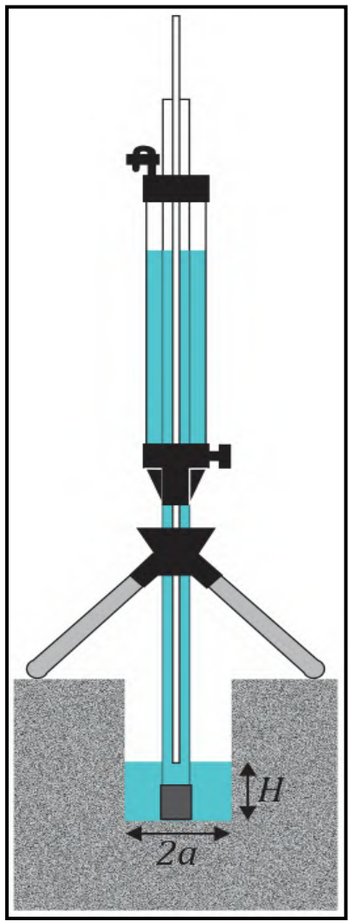

TOWN OF CALEDON
PLANNING
RECEIVED
Jul 12, 2021

Saturated Hydraulic Conductivity Calculation

Project Number:	2017-0646	**Date:**	28-Oct-19
Site Name:	Manors of Belfountain	**Weather:**	16°C, Sunny
CEG Personnel:	Alireza Hejazi	**Precipitation in Previous Two Days:**	No
Test ID:	Test Pit B, Test 2	**Soil Sample ID:**	
Test Pit Easting (m):	579657	**Test Pit Northing (m):**	4848654
Test Depth (m below existing grade):	2 m	**Test Elevation (masl):**	~399.7 masl, ground elevation ~401.7
Soil Description:	Sand and gravel, veru coarse boulders and cobbles, light brown, dry		

Reservoir Type (enter "1" for Combined and "2" for Inner reservoir): 1
Enter water Head Height ("H" in cm): 5
Enter the Borehole Radius ("a" in cm): 5

Enter the soil texture-structure category (enter one of the below numbers): 4

1. Compacted, Structure-less, clayey or silty materials such as landfill caps and liners, lacustrine or marine sediments, etc.
2. Soils which are both fine textured (clayey or silty) and unstructured; may also include some fine sands.
3. Most structured soils from clays through loams; also includes unstructured medium and fine sands. The category most frequently applicable for agricultural soils.
4. Coarse and gravely sands; may also include some highly structured soils with large and/or numerous cracks, macropors, etc

Steady State Rate of Water Level Change ("R" in cm/min): 5.0000

Res Type	35.22
H	5
a	5
H/a	1
a*	0.36
C0.01	0.5931
C0.04	0.6058
C0.12	0.5582
C0.36	0.5582
C	0.5582
R	5.000
Q	2.935
pi	3.1415

$\alpha^* =$	0.36	*1/cm*
$C =$	0.558165	
$Q =$	2.935	*cm³/sec*
$K_{fs} =$	5.68E-03	*cm/sec*
	3.41E-01	*cm/min*
	5.68E-05	*m/sec*
	1.34E-01	*inch/min*
	2.24E-03	*inch/sec*
$\Phi_m =$	1.58E-02	*cm²/min*

Input Result

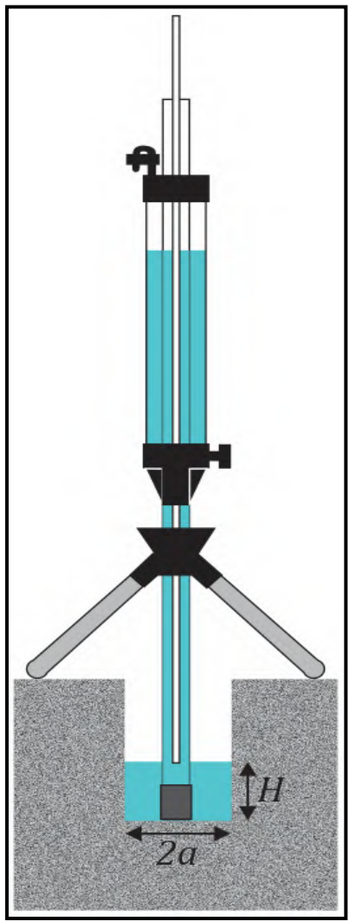

TOWN OF CALEDON
PLANNING
RECEIVED
Jul 12, 2021

Saturated Hydraulic Conductivity Calculation

Project Number:	2017-0646	**Date:**	28-Oct-19
Site Name:	Manors of Belfountain	**Weather:**	16°C, Sunny
CEG Personnel:	Alireza Hejazi	**Precipitation in Previous Two Days:**	No
Test ID:	Test Pit 3, Test 1	**Soil Sample ID:**	
Test Pit Easting (m):	579696	**Test Pit Northing (m):**	4848694
Test Depth (m below existing grade):	1 m	**Test Elevation (masl):**	~399.2 masl, ground elevation ~400.2
Soil Description:	Silty clay, some sand, light brown, moist		

Reservoir Type (enter "1" for Combined and "2" for Inner reservoir):	**2**
Enter water Head Height ("H" in cm):	**7**
Enter the Borehole Radius ("a" in cm):	**3**
Enter the soil texture-structure category (enter one of the below numbers):	**2**

1. Compacted, Structure-less, clayey or silty materials such as landfill caps and liners, lacustrine or marine sediments, etc.
2. Soils which are both fine textured (clayey or silty) and unstructured; may also include some fine sands.
3. Most structured soils from clays through loams; also includes unstructured medium and fine sands. The category most frequently applicable for agricultural soils.
4. Coarse and gravely sands; may also include some highly structured soils with large and/or numerous cracks, macropors, etc

Steady State Rate of Water Level Change ("R" in cm/min): **1.0000**

Res Type	2.16
H	7
a	3
H/a	2.3333
a*	0.04
C0.01	0.9878
C0.04	1.0396
C0.12	1.0139
C0.36	1.0139
C	1.0396
R	1.000
Q	0.036
pi	3.1415

$\alpha^* =$	**0.04**	*1/cm*
$C =$	**1.039608**	
$Q =$	**0.036**	*cm³/sec*
$K_{fs} =$	**2.60E-05**	*cm/sec*
	1.56E-03	*cm/min*
	2.60E-07	*m/sec*
	6.15E-04	*inch/min*
	1.03E-05	*inch/sec*
$\Phi_m =$	**6.51E-04**	*cm²/min*

Input Result

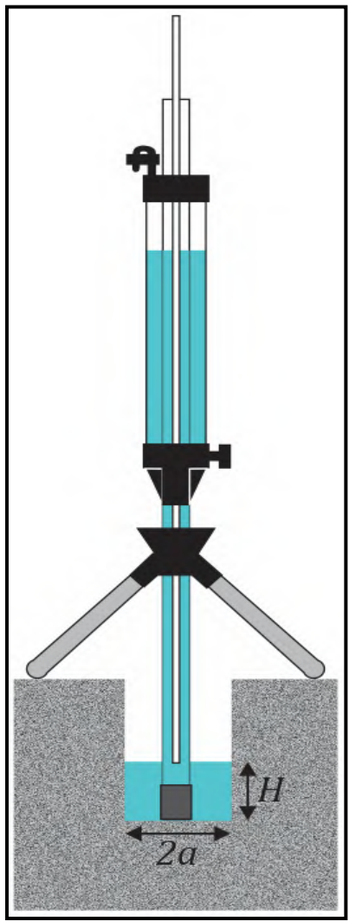

TOWN OF CALEDON
PLANNING
RECEIVED
Jul 12, 2021

Saturated Hydraulic Conductivity Calculation

Project Number:	2017-0646	**Date:**	28-Oct-19
Site Name:	Manors of Belfountain	**Weather:**	16°C, Sunny
CEG Personnel:	Alireza Hejazi	**Precipitation in Previous Two Days:**	No
Test ID:	Test Pit 3, Test 2	**Soil Sample ID:**	
Test Pit Easting (m):	579696	**Test Pit Northing (m):**	4848694
Test Depth (m below existing grade):	2 m	**Test Elevation (masl):**	~398.2 masl, ground elevation ~400.2
Soil Description:	Silty clay, some sand, light brown, moist		

Reservoir Type (enter "1" for Combined and "2" for Inner reservoir): 2
Enter water Head Height ("H" in cm): 12
Enter the Borehole Radius ("a" in cm): 3

Enter the soil texture-structure category (enter one of the below numbers): 2

1. Compacted, Structure-less, clayey or silty materials such as landfill caps and liners, lacustrine or marine sediments, etc.
2. Soils which are both fine textured (clayey or silty) and unstructured; may also include some fine sands.
3. Most structured soils from clays through loams; also includes unstructured medium and fine sands. The category most frequently applicable for agricultural soils.
4. Coarse and gravely sands; may also include some highly structured soils with large and/or numerous cracks, macropors, etc

Steady State Rate of Water Level Change ("R" in cm/min): 5.0000

Res Type	2.16
H	12
a	3
H/a	4
a*	0.04
C0.01	1.3348
C0.04	1.4355
C0.12	1.449
C0.36	1.449
C	1.4355
R	5.000
Q	0.18
pi	3.1415

$\alpha^* =$	0.04	*1/cm*
$C =$	1.435527	
$Q =$	0.18	*cm³/sec*
$K_{fs} =$	9.13E-05	*cm/sec*
	5.48E-03	*cm/min*
	9.13E-07	*m/sec*
	2.16E-03	*inch/min*
	3.59E-05	*inch/sec*
$\Phi_m =$	2.28E-03	*cm²/min*

Input Result

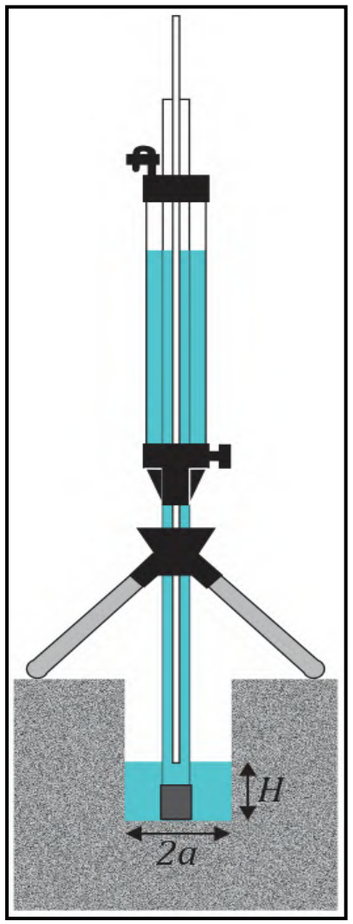

TOWN OF CALEDON
PLANNING
RECEIVED
Jul 12, 2021

Saturated Hydraulic Conductivity Calculation

Project Number:	2017-0646	**Date:**	29-Oct-19
Site Name:	Manors of Belfountain	**Weather:**	12°C, Sunny
CEG Personnel:	Alireza Hejazi	**Precipitation in Previous Two Days:**	No
Test ID:	Test Pit D, Test 1	**Soil Sample ID:**	
Test Pit Easting (m):	579693	**Test Pit Northing (m):**	4848873
Test Depth (m below existing grade):	1 m	**Test Elevation (masl):**	~400.7 masl, ground elevation ~401.7
Soil Description:	Sand and gravel, some silt, boulders and cobbles, light brown, moist		

Reservoir Type (enter "1" for Combined and "2" for Inner reservoir): 1
Enter water Head Height ("H" in cm): 5
Enter the Borehole Radius ("a" in cm): 4

Enter the soil texture-structure category (enter one of the below numbers): 4

1. Compacted, Structure-less, clayey or silty materials such as landfill caps and liners, lacustrine or marine sediments, etc.
2. Soils which are both fine textured (clayey or silty) and unstructured; may also include some fine sands.
3. Most structured soils from clays through loams; also includes unstructured medium and fine sands. The category most frequently applicable for agricultural soils.
4. Coarse and gravely sands; may also include some highly structured soils with large and/or numerous cracks, macropors, etc

Steady State Rate of Water Level Change ("R" in cm/min): 2.4000

Res Type	35.22
H	5
a	4
H/a	1.25
a*	0.36
C0.01	0.6805
C0.04	0.7003
C0.12	0.6551
C0.36	0.6551
C	0.6551
R	2.400
Q	1.4088
pi	3.1415

$\alpha^* =$ **0.36** *1/cm*

$C =$ **0.655146**

$Q =$ **1.4088** cm^3/sec

$K_{fs} =$ **3.33E-03** *cm/sec*
2.00E-01 *cm/min*
3.33E-05 *m/sec*
7.86E-02 *inch/min*
1.31E-03 *inch/sec*

$\Phi_m =$ **9.25E-03** cm^2/min

Input Result

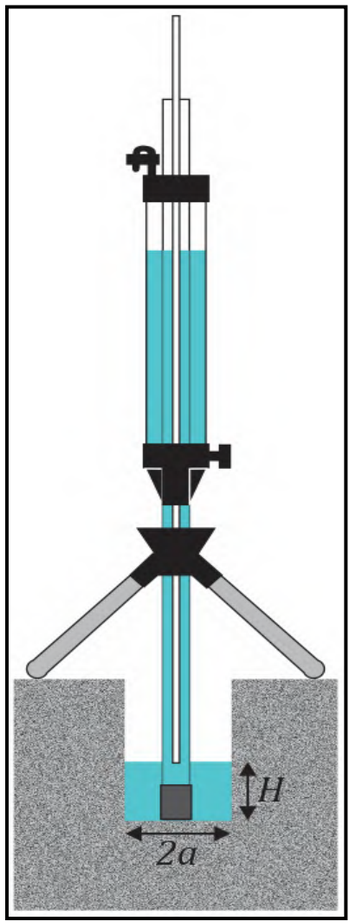

TOWN OF CALEDON
PLANNING
RECEIVED
Jul 12, 2021

Saturated Hydraulic Conductivity Calculation

Project Number:	2017-0646	**Date:**	29-Oct-19
Site Name:	Manors of Belfountain	**Weather:**	12°C, Sunny
CEG Personnel:	Alireza Hejazi	**Precipitation in Previous Two Days:**	No
Test ID:	Test Pit D, Test 2	**Soil Sample ID:**	
Test Pit Easting (m):	579693	**Test Pit Northing (m):**	4848873
Test Depth (m below existing grade):	2 m	**Test Elevation (masl):**	~399.7 masl, ground elevation ~401.7
Soil Description:	Sand and gravel, boulders and cobbles, light brown, moist		

Reservoir Type (enter "1" for Combined and "2" for Inner reservoir): 1
Enter water Head Height ("H" in cm): 5
Enter the Borehole Radius ("a" in cm): 5

Enter the soil texture-structure category (enter one of the below numbers): 4

1. Compacted, Structure-less, clayey or silty materials such as landfill caps and liners, lacustrine or marine sediments, etc.
2. Soils which are both fine textured (clayey or silty) and unstructured; may also include some fine sands.
3. Most structured soils from clays through loams; also includes unstructured medium and fine sands. The category most frequently applicable for agricultural soils.
4. Coarse and gravely sands; may also include some highly structured soils with large and/or numerous cracks, macropors, etc

Steady State Rate of Water Level Change ("R" in cm/min): 9.6000

Res Type	35.22
H	5
a	5
H/a	1
a*	0.36
C0.01	0.5931
C0.04	0.6058
C0.12	0.5582
C0.36	0.5582
C	0.5582
R	9.600
Q	5.6352
pi	3.1415

$\alpha^* =$	0.36	*1/cm*
$C =$	0.558165	
$Q =$	5.6352	*cm³/sec*
$K_{fs} =$	1.09E-02	*cm/sec*
	6.55E-01	*cm/min*
	1.09E-04	*m/sec*
	2.58E-01	*inch/min*
	4.30E-03	*inch/sec*
$\Phi_m =$	3.03E-02	*cm²/min*

Input Result

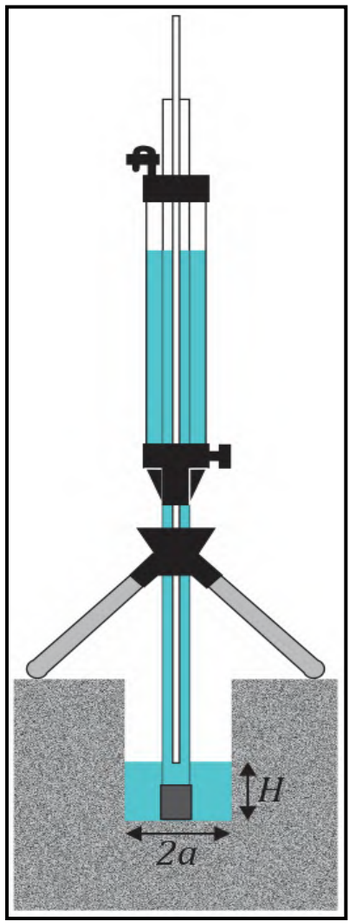

TOWN OF CALEDON
PLANNING
RECEIVED
Jul 12, 2021

Saturated Hydraulic Conductivity Calculation

Project Number:	2017-0646	**Date:**	29-Oct-19
Site Name:	Manors of Belfountain	**Weather:**	12°C, Sunny
CEG Personnel:	Alireza Hejazi	**Precipitation in Previous Two Days:**	No
Test ID:	Test Pit 2, Test 1	**Soil Sample ID:**	
Test Pit Easting (m):	579832	**Test Pit Northing (m):**	4848770
Test Depth (m below existing grade):	1.2 m	**Test Elevation (masl):**	~400.5 masl, ground elevation ~401.7
Soil Description:	Silty clay, some sand, light brown, moist		

Reservoir Type (enter "1" for Combined and "2" for Inner reservoir): 2
Enter water Head Height ("H" in cm): 12
Enter the Borehole Radius ("a" in cm): 4

Enter the soil texture-structure category (enter one of the below numbers): 3

1. Compacted, Structure-less, clayey or silty materials such as landfill caps and liners, lacustrine or marine sediments, etc.
2. Soils which are both fine textured (clayey or silty) and unstructured; may also include some fine sands.
3. Most structured soils from clays through loams; also includes unstructured medium and fine sands. The category most frequently applicable for agricultural soils.
4. Coarse and gravely sands; may also include some highly structured soils with large and/or numerous cracks, macropors, etc

Steady State Rate of Water Level Change ("R" in cm/min): 0.4000

Res Type	2.16
H	12
a	4
H/a	3
a*	0.12
C0.01	1.14
C0.04	1.2116
C0.12	1.201
C0.36	1.201
C	1.201
R	0.400
Q	0.0144
pi	3.1415

$\alpha^* =$	0.12	*1/cm*
$C =$	1.20101	
$Q =$	0.0144	*cm³/sec*
$K_{fs} =$	1.09E-05	*cm/sec*
	6.51E-04	*cm/min*
	1.09E-07	*m/sec*
	2.56E-04	*inch/min*
	4.27E-06	*inch/sec*
$\Phi_m =$	9.04E-05	*cm²/min*

Input Result

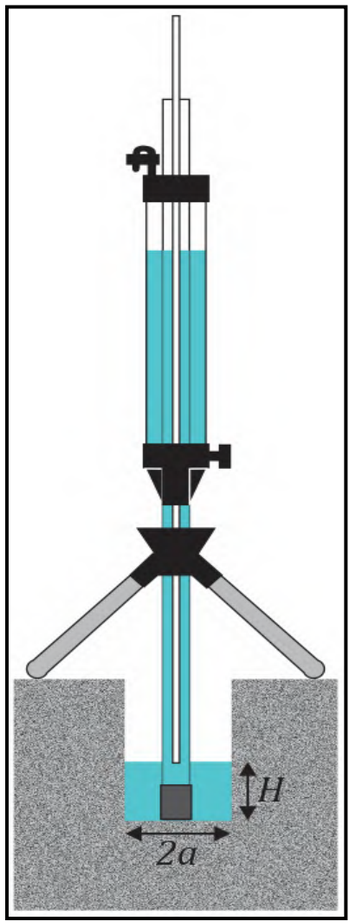

TOWN OF CALEDON
PLANNING
RECEIVED
Jul 12, 2021

Saturated Hydraulic Conductivity Calculation

Project Number:	2017-0646	**Date:**	29-Oct-19
Site Name:	Manors of Belfountain	**Weather:**	12°C, Sunny
CEG Personnel:	Alireza Hejazi	**Precipitation in Previous Two Days:**	No
Test ID:	Test Pit 2, Test 2	**Soil Sample ID:**	
Test Pit Easting (m):	579832	**Test Pit Northing (m):**	4848770
Test Depth (m below existing grade):	2 m	**Test Elevation (masl):**	~399.7 masl, ground elevation ~401.7
Soil Description:	Silty clay, some sand, cobbles, light brown, moist		

Reservoir Type (enter "1" for Combined and "2" for Inner reservoir): 1
Enter water Head Height ("H" in cm): 5
Enter the Borehole Radius ("a" in cm): 4

Enter the soil texture-structure category (enter one of the below numbers): 3

1. Compacted, Structure-less, clayey or silty materials such as landfill caps and liners, lacustrine or marine sediments, etc.
2. Soils which are both fine textured (clayey or silty) and unstructured; may also include some fine sands.
3. Most structured soils from clays through loams; also includes unstructured medium and fine sands. The category most frequently applicable for agricultural soils.
4. Coarse and gravely sands; may also include some highly structured soils with large and/or numerous cracks, macropors, etc

Steady State Rate of Water Level Change ("R" in cm/min): 1.2000

Res Type	35.22
H	5
a	4
H/a	1.25
a*	0.12
C0.01	0.6805
C0.04	0.7003
C0.12	0.6551
C0.36	0.6551
C	0.6551
R	1.200
Q	0.7044
pi	3.1415

$\alpha^* =$ **0.12** *1/cm*

$C =$ **0.655146**

$Q =$ **0.7044** cm^3/sec

$K_{fs} =$ **1.02E-03** *cm/sec*
6.13E-02 *cm/min*
1.02E-05 *m/sec*
2.41E-02 *inch/min*
4.02E-04 *inch/sec*

$\Phi_m =$ **8.51E-03** cm^2/min

Input Result

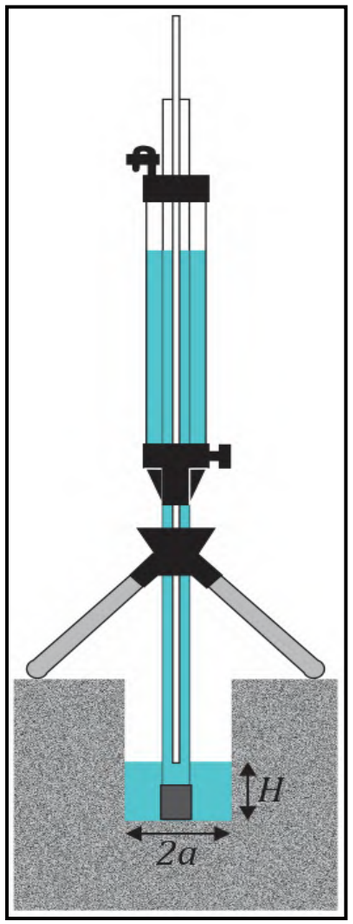

TOWN OF CALEDON
PLANNING
RECEIVED
Jul 12, 2021

Saturated Hydraulic Conductivity Calculation

Project Number:	2017-0646	**Date:**	29-Oct-19
Site Name:	Manors of Belfountain	**Weather:**	12°C, Sunny
CEG Personnel:	Alireza Hejazi	**Precipitation in Previous Two Days:**	No
Test ID:	Test Pit 8, Test 1	**Soil Sample ID:**	
Test Pit Easting (m):	579947	**Test Pit Northing (m):**	4848702
Test Depth (m below existing grade):	1.2 m	**Test Elevation (masl):**	~402.2 masl, ground elevation ~403.4
Soil Description:	Sandy silt,cobbles, light brown, moist		

Reservoir Type (enter "1" for Combined and "2" for Inner reservoir): 2
Enter water Head Height ("H" in cm): 9
Enter the Borehole Radius ("a" in cm): 4

Enter the soil texture-structure category (enter one of the below numbers): 3

1. Compacted, Structure-less, clayey or silty materials such as landfill caps and liners, lacustrine or marine sediments, etc.
2. Soils which are both fine textured (clayey or silty) and unstructured; may also include some fine sands.
3. Most structured soils from clays through loams; also includes unstructured medium and fine sands. The category most frequently applicable for agricultural soils.
4. Coarse and gravely sands; may also include some highly structured soils with large and/or numerous cracks, macropors, etc

Steady State Rate of Water Level Change ("R" in cm/min): 7.6000

Res Type	2.16
H	9
a	4
H/a	2.25
a*	0.12
C0.01	0.9672
C0.04	1.0165
C0.12	0.989
C0.36	0.989
C	0.989
R	7.600
Q	0.2736
pi	3.1415

$\alpha^* =$	**0.12**	*1/cm*
$C =$	**0.989**	
$Q =$	**0.2736**	*cm³/sec*
$K_{fs} =$	**2.63E-04**	*cm/sec*
	1.58E-02	*cm/min*
	2.63E-06	*m/sec*
	6.21E-03	*inch/min*
	1.03E-04	*inch/sec*
$\Phi_m =$	**2.19E-03**	*cm²/min*

Input Result

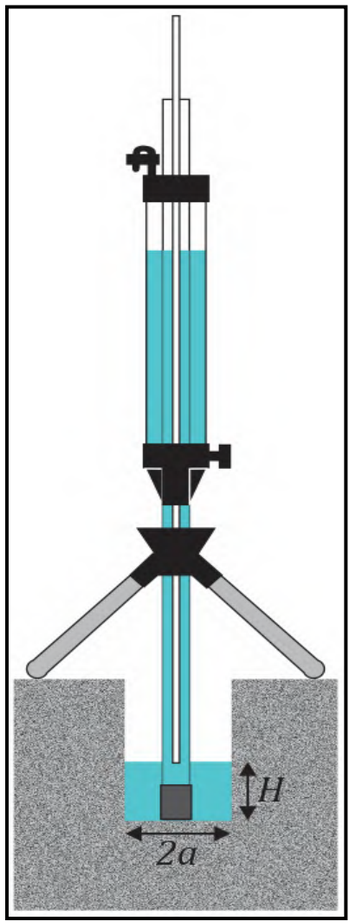

TOWN OF CALEDON
PLANNING
RECEIVED
Jul 12, 2021

Saturated Hydraulic Conductivity Calculation

Project Number:	2017-0646	**Date:**	29-Oct-19
Site Name:	Manors of Belfountain	**Weather:**	12°C, Sunny
CEG Personnel:	Alireza Hejazi	**Precipitation in Previous Two Days:**	No
Test ID:	Test Pit 8, Test 2	**Soil Sample ID:**	
Test Pit Easting (m):	579947	**Test Pit Northing (m):**	4848702
Test Depth (m below existing grade):	2 m	**Test Elevation (masl):**	~401.2 masl, ground elevation ~403.4
Soil Description:	Silty sand, dark brown, moist		

Reservoir Type (enter "1" for Combined and "2" for Inner reservoir): 1
Enter water Head Height ("H" in cm): 5
Enter the Borehole Radius ("a" in cm): 4

Enter the soil texture-structure category (enter one of the below numbers): 3

1. Compacted, Structure-less, clayey or silty materials such as landfill caps and liners, lacustrine or marine sediments, etc.
2. Soils which are both fine textured (clayey or silty) and unstructured; may also include some fine sands.
3. Most structured soils from clays through loams; also includes unstructured medium and fine sands. The category most frequently applicable for agricultural soils.
4. Coarse and gravely sands; may also include some highly structured soils with large and/or numerous cracks, macropors, etc

Steady State Rate of Water Level Change ("R" in cm/min): 6.0000

Res Type	35.22
H	5
a	4
H/a	1.25
a*	0.12
C0.01	0.6805
C0.04	0.7003
C0.12	0.6551
C0.36	0.6551
C	0.6551
R	6.000
Q	3.522
pi	3.1415

$\alpha^* =$	0.12	*1/cm*
$C =$	0.655146	
$Q =$	3.522	*cm³/sec*
$K_{fs} =$	5.11E-03	*cm/sec*
	3.06E-01	*cm/min*
	5.11E-05	*m/sec*
	1.21E-01	*inch/min*
	2.01E-03	*inch/sec*
$\Phi_m =$	4.26E-02	*cm²/min*

Input Result

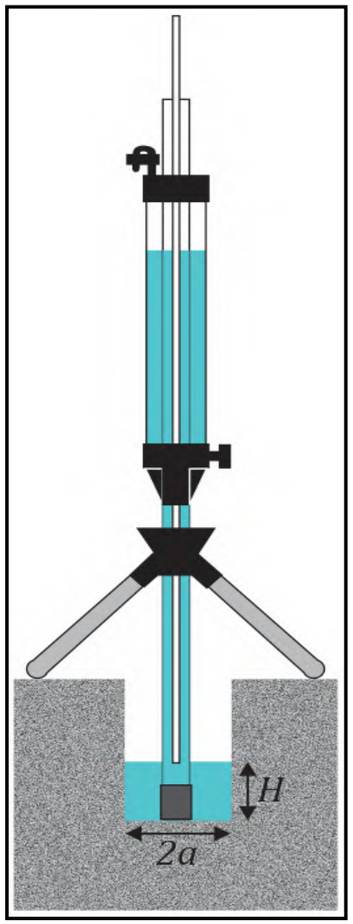

TOWN OF CALEDON
PLANNING
RECEIVED
Jul 12, 2021

Saturated Hydraulic Conductivity Calculation

Project Number:	2017-0646	**Date:**	29-Oct-19
Site Name:	Manors of Belfountain	**Weather:**	12°C, Sunny
CEG Personnel:	Alireza Hejazi	**Precipitation in Previous Two Days:**	No
Test ID:	Test Pit 6, Test 1	**Soil Sample ID:**	
Test Pit Easting (m):	579790	**Test Pit Northing (m):**	4848954
Test Depth (m below existing grade):	1 m	**Test Elevation (masl):**	~400.6 masl, ground elevation ~401.6
Soil Description:	Sand and gravel, cobbles and boulders, green, moist		

Reservoir Type (enter "1" for Combined and "2" for Inner reservoir): 1
Enter water Head Height ("H" in cm): 5
Enter the Borehole Radius ("a" in cm): 4

Enter the soil texture-structure category (enter one of the below numbers): 4

1. Compacted, Structure-less, clayey or silty materials such as landfill caps and liners, lacustrine or marine sediments, etc.
2. Soils which are both fine textured (clayey or silty) and unstructured; may also include some fine sands.
3. Most structured soils from clays through loams; also includes unstructured medium and fine sands. The category most frequently applicable for agricultural soils.
4. Coarse and gravely sands; may also include some highly structured soils with large and/or numerous cracks, macropors, etc

Steady State Rate of Water Level Change ("R" in cm/min): 8.4000

Res Type	35.22
H	5
a	4
H/a	1.25
a*	0.36
C0.01	0.6805
C0.04	0.7003
C0.12	0.6551
C0.36	0.6551
C	0.6551
R	8.400
Q	4.9308
pi	3.1415

$\alpha^* =$ **0.36** *1/cm*

$C =$ **0.655146**

$Q =$ **4.9308** *cm³/sec*

$K_{fs} =$ **1.17E-02** *cm/sec*
6.99E-01 *cm/min*
1.17E-04 *m/sec*
2.75E-01 *inch/min*
4.59E-03 *inch/sec*

$\Phi_m =$ **3.24E-02** *cm²/min*

Input Result

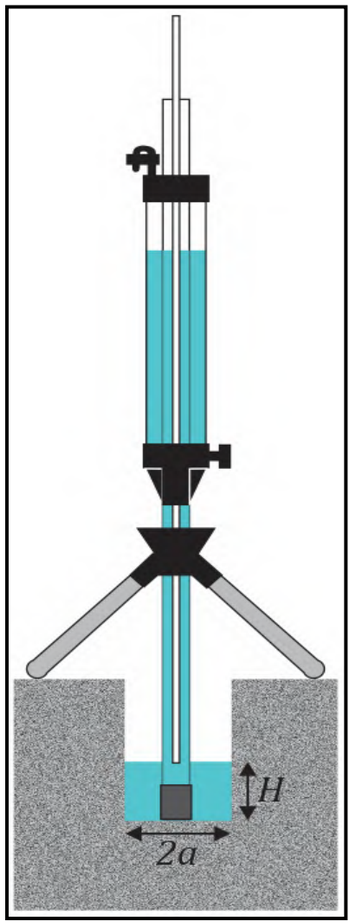

TOWN OF CALEDON
PLANNING
RECEIVED
Jul 12, 2021

Saturated Hydraulic Conductivity Calculation

Project Number:	2017-0646	**Date:**	29-Oct-19
Site Name:	Manors of Belfountain	**Weather:**	12°C, Sunny
CEG Personnel:	Alireza Hejazi	**Precipitation in Previous Two Days:**	No
Test ID:	Test Pit 6, Test 2	**Soil Sample ID:**	
Test Pit Easting (m):	579790	**Test Pit Northing (m):**	4848954
Test Depth (m below existing grade):	0.5 m	**Test Elevation (masl):**	~401.1 masl, ground elevation ~401.6
Soil Description:	Silty clay, some sand, dark brown, moist		

Reservoir Type (enter "1" for Combined and "2" for Inner reservoir): 2
Enter water Head Height ("H" in cm): 7
Enter the Borehole Radius ("a" in cm): 4

Enter the soil texture-structure category (enter one of the below numbers): 3

1. Compacted, Structure-less, clayey or silty materials such as landfill caps and liners, lacustrine or marine sediments, etc.
2. Soils which are both fine textured (clayey or silty) and unstructured; may also include some fine sands.
3. Most structured soils from clays through loams; also includes unstructured medium and fine sands. The category most frequently applicable for agricultural soils.
4. Coarse and gravely sands; may also include some highly structured soils with large and/or numerous cracks, macropors, etc

Steady State Rate of Water Level Change ("R" in cm/min): 1.0500

Res Type	2.16
H	7
a	4
H/a	1.75
a*	0.12
C0.01	0.8341
C0.04	0.8685
C0.12	0.8311
C0.36	0.8311
C	0.8311
R	1.050
Q	0.0378
pi	3.1415

$\alpha^* =$	0.12	*1/cm*
$C =$	0.831073	
$Q =$	0.0378	*cm³/sec*
$K_{fs} =$	4.39E-05	*cm/sec*
	2.63E-03	*cm/min*
	4.39E-07	*m/sec*
	1.04E-03	*inch/min*
	1.73E-05	*inch/sec*
$\Phi_m =$	3.66E-04	*cm²/min*

Input Result

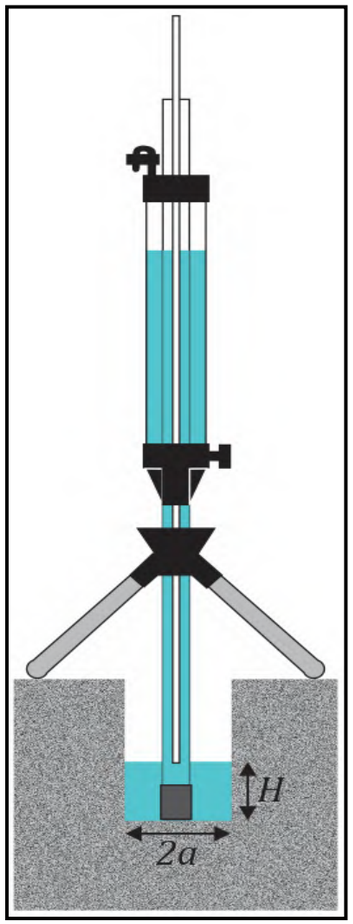

TOWN OF CALEDON
PLANNING
RECEIVED
Jul 12, 2021

Saturated Hydraulic Conductivity Calculation

Project Number:	2017-0646	**Date:**	29-Oct-19
Site Name:	Manors of Belfountain	**Weather:**	12°C, Sunny
CEG Personnel:	Alireza Hejazi	**Precipitation in Previous Two Days:**	No
Test ID:	Test Pit 5, Test 1	**Soil Sample ID:**	
Test Pit Easting (m):	579484	**Test Pit Northing (m):**	4848714
Test Depth (m below existing grade):	0.5 m	**Test Elevation (masl):**	~400 masl, ground elevation ~400.5
Soil Description:	Silt, dark brown, moist		

Reservoir Type (enter "1" for Combined and "2" for Inner reservoir): 2
Enter water Head Height ("H" in cm): 7
Enter the Borehole Radius ("a" in cm): 3

Enter the soil texture-structure category (enter one of the below numbers): 3

1. Compacted, Structure-less, clayey or silty materials such as landfill caps and liners, lacustrine or marine sediments, etc.
2. Soils which are both fine textured (clayey or silty) and unstructured; may also include some fine sands.
3. Most structured soils from clays through loams; also includes unstructured medium and fine sands. The category most frequently applicable for agricultural soils.
4. Coarse and gravely sands; may also include some highly structured soils with large and/or numerous cracks, macropors, etc

Steady State Rate of Water Level Change ("R" in cm/min): 10.0000

Res Type	2.16
H	7
a	3
H/a	2.3333
a*	0.12
C0.01	0.9878
C0.04	1.0396
C0.12	1.0139
C0.36	1.0139
C	1.0139
R	10.000
Q	0.36
pi	3.1415

$\alpha^* =$	0.12	*1/cm*
$C =$	1.013901	
$Q =$	0.36	*cm³/sec*
$K_{fs} =$	5.19E-04	*cm/sec*
	3.12E-02	*cm/min*
	5.19E-06	*m/sec*
	1.23E-02	*inch/min*
	2.04E-04	*inch/sec*
$\Phi_m =$	4.33E-03	*cm²/min*

Input Result

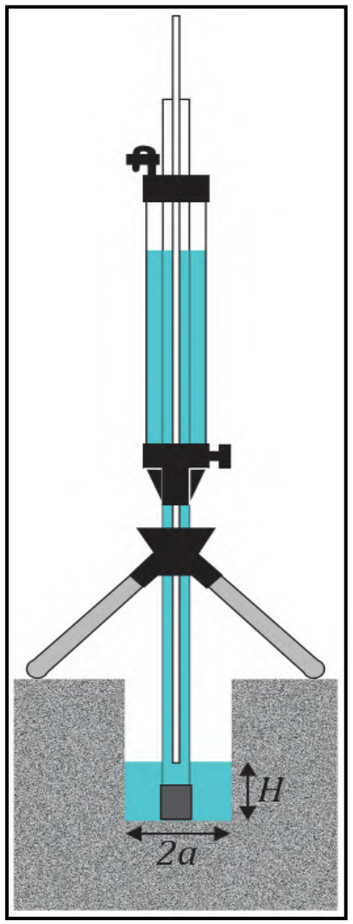

TOWN OF CALEDON
PLANNING
RECEIVED
Jul 12, 2021

Saturated Hydraulic Conductivity Calculation

Project Number:	2017-0646	**Date:**	29-Oct-19
Site Name:	Manors of Belfountain	**Weather:**	12°C, Sunny
CEG Personnel:	Alireza Hejazi	**Precipitation in Previous Two Days:**	No
Test ID:	Test Pit 5, Test 2	**Soil Sample ID:**	
Test Pit Easting (m):	579484	**Test Pit Northing (m):**	4848714
Test Depth (m below existing grade):	0.3 m	**Test Elevation (masl):**	~400.2 masl, ground elevation ~400.5
Soil Description:	Silt,some clay, dark brown, moist		

Reservoir Type (enter "1" for Combined and "2" for Inner reservoir): 2
Enter water Head Height ("H" in cm): 9
Enter the Borehole Radius ("a" in cm): 3

Enter the soil texture-structure category (enter one of the below numbers): 3

1. Compacted, Structure-less, clayey or silty materials such as landfill caps and liners, lacustrine or marine sediments, etc.
2. Soils which are both fine textured (clayey or silty) and unstructured; may also include some fine sands.
3. Most structured soils from clays through loams; also includes unstructured medium and fine sands. The category most frequently applicable for agricultural soils.
4. Coarse and gravely sands; may also include some highly structured soils with large and/or numerous cracks, macropors, etc

Steady State Rate of Water Level Change ("R" in cm/min): 5.1000

Res Type	2.16
H	9
a	3
H/a	3
a*	0.12
C0.01	1.14
C0.04	1.2116
C0.12	1.201
C0.36	1.201
C	1.201
R	5.100
Q	0.1836
pi	3.1415

$\alpha^* =$	**0.12**	*1/cm*
$C =$	**1.20101**	
$Q =$	**0.1836**	*cm³/sec*
$K_{fs} =$	**2.17E-04**	*cm/sec*
	1.30E-02	*cm/min*
	2.17E-06	*m/sec*
	5.14E-03	*inch/min*
	8.56E-05	*inch/sec*
$\Phi_m =$	**1.81E-03**	*cm²/min*

Input Result

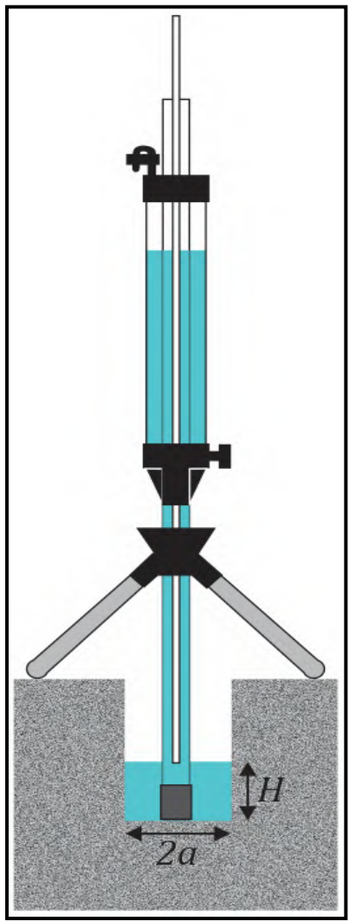

TOWN OF CALEDON
PLANNING
RECEIVED
Jul 12, 2021

Saturated Hydraulic Conductivity Calculation

Project Number:	2017-0646	**Date:**	29-Oct-19
Site Name:	Manors of Belfountain	**Weather:**	12°C, Sunny
CEG Personnel:	Alireza Hejazi	**Precipitation in Previous Two Days:**	No
Test ID:	Test Pit C, Test 1	**Soil Sample ID:**	
Test Pit Easting (m):	579527	**Test Pit Northing (m):**	4848769
Test Depth (m below existing grade):	1 m	**Test Elevation (masl):**	~400.2 masl, ground elevation ~401.2
Soil Description:	Sand, some silt, boulders and cobbles, brown, moist		

Reservoir Type (enter "1" for Combined and "2" for Inner reservoir): 1
Enter water Head Height ("H" in cm): 7
Enter the Borehole Radius ("a" in cm): 7.5

Enter the soil texture-structure category (enter one of the below numbers): 4

1. Compacted, Structure-less, clayey or silty materials such as landfill caps and liners, lacustrine or marine sediments, etc.
2. Soils which are both fine textured (clayey or silty) and unstructured; may also include some fine sands.
3. Most structured soils from clays through loams; also includes unstructured medium and fine sands. The category most frequently applicable for agricultural soils.
4. Coarse and gravely sands; may also include some highly structured soils with large and/or numerous cracks, macropors, etc

Steady State Rate of Water Level Change ("R" in cm/min): 5.2000

Res Type	35.22
H	7
a	7.5
H/a	0.9333
a*	0.36
C0.01	0.5682
C0.04	0.5791
C0.12	0.531
C0.36	0.531
C	0.531
R	5.200
Q	3.0524
pi	3.1415

$\alpha^* =$	0.36	*1/cm*
$C =$	0.531017	
$Q =$	3.0524	*cm³/sec*
$K_{fs} =$	3.09E-03	*cm/sec*
	1.86E-01	*cm/min*
	3.09E-05	*m/sec*
	7.31E-02	*inch/min*
	1.22E-03	*inch/sec*
$\Phi_m =$	8.59E-03	*cm²/min*

Input Result

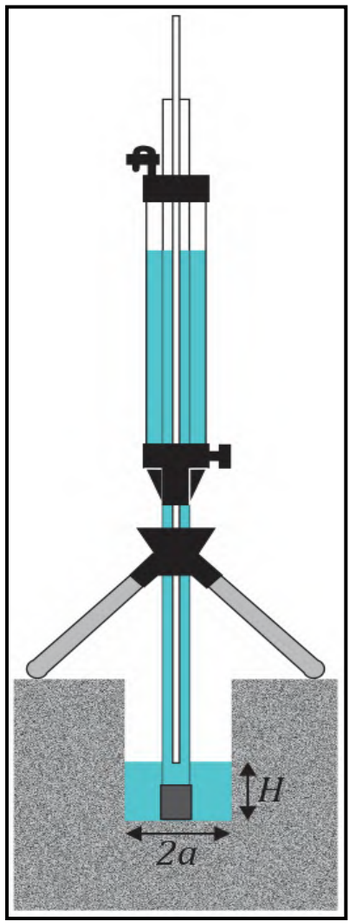

TOWN OF CALEDON
PLANNING
RECEIVED
Jul 12, 2021

Saturated Hydraulic Conductivity Calculation

Project Number:	2017-0646	**Date:**	29-Oct-19
Site Name:	Manors of Belfountain	**Weather:**	12°C, Sunny
CEG Personnel:	Alireza Hejazi	**Precipitation in Previous Two Days:**	No
Test ID:	Test Pit C, Test 2	**Soil Sample ID:**	
Test Pit Easting (m):	579527	**Test Pit Northing (m):**	4848769
Test Depth (m below existing grade):	2 m	**Test Elevation (masl):**	~399.2 masl, ground elevation ~401.2
Soil Description:	Sand, some silt, boulders and cobbles, brown,dry		

Reservoir Type (enter "1" for Combined and "2" for Inner reservoir): 1
Enter water Head Height ("H" in cm): 5
Enter the Borehole Radius ("a" in cm): 7.5

Enter the soil texture-structure category (enter one of the below numbers): 4

1. Compacted, Structure-less, clayey or silty materials such as landfill caps and liners, lacustrine or marine sediments, etc.
2. Soils which are both fine textured (clayey or silty) and unstructured; may also include some fine sands.
3. Most structured soils from clays through loams; also includes unstructured medium and fine sands. The category most frequently applicable for agricultural soils.
4. Coarse and gravely sands; may also include some highly structured soils with large and/or numerous cracks, macropors, etc

Steady State Rate of Water Level Change ("R" in cm/min): 2.1000

Res Type	35.22
H	5
a	7.5
H/a	0.6667
a*	0.36
C0.01	0.4601
C0.04	0.4639
C0.12	0.4156
C0.36	0.4156
C	0.4156
R	2.100
Q	1.2327
pi	3.1415

$\alpha^* =$ **0.36** *1/cm*

$C =$ **0.415631**

$Q =$ **1.2327** cm^3/sec

$K_{fs} =$ **1.61E-03** *cm/sec*
9.67E-02 *cm/min*
1.61E-05 *m/sec*
3.81E-02 *inch/min*
6.35E-04 *inch/sec*

$\Phi_m =$ **4.48E-03** cm^2/min

Input Result

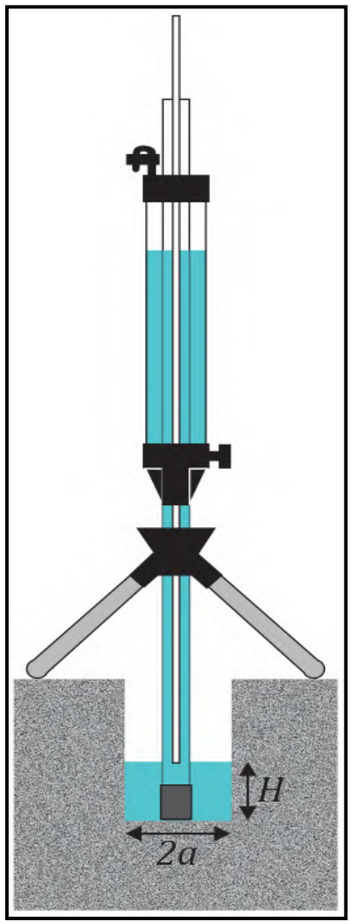

TOWN OF CALEDON
PLANNING
RECEIVED
Jul 12, 2021

Saturated Hydraulic Conductivity Calculation

Project Number:	2017-0646	**Date:**	29-Oct-19
Site Name:	Manors of Belfountain	**Weather:**	12°C, Sunny
CEG Personnel:	Alireza Hejazi	**Precipitation in Previous Two Days:**	No
Test ID:	Test Pit 7, Test 1	**Soil Sample ID:**	
Test Pit Easting (m):	579485	**Test Pit Northing (m):**	4848455
Test Depth (m below existing grade):	0.5 m	**Test Elevation (masl):**	~403.1 masl, ground elevation ~403.7
Soil Description:	Clay silt, cobbles, brown, moist		

Reservoir Type (enter "1" for Combined and "2" for Inner reservoir): 1
Enter water Head Height ("H" in cm): 5
Enter the Borehole Radius ("a" in cm): 3

Enter the soil texture-structure category (enter one of the below numbers): 3

1. Compacted, Structure-less, clayey or silty materials such as landfill caps and liners, lacustrine or marine sediments, etc.
2. Soils which are both fine textured (clayey or silty) and unstructured; may also include some fine sands.
3. Most structured soils from clays through loams; also includes unstructured medium and fine sands. The category most frequently applicable for agricultural soils.
4. Coarse and gravely sands; may also include some highly structured soils with large and/or numerous cracks, macropors, etc

Steady State Rate of Water Level Change ("R" in cm/min): 4.0000

Res Type	35.22
H	5
a	3
H/a	1.6667
a*	0.12
C0.01	0.8101
C0.04	0.8421
C0.12	0.8032
C0.36	0.8032
C	0.8032
R	4.000
Q	2.348
pi	3.1415

$\alpha^* =$ **0.12** *1/cm*

$C =$ **0.803154**

$Q =$ **2.348** cm^3/sec

$K_{fs} =$ **4.27E-03** *cm/sec*
2.56E-01 *cm/min*
4.27E-05 *m/sec*
1.01E-01 *inch/min*
1.68E-03 *inch/sec*

$\Phi_m =$ **3.56E-02** cm^2/min

Input Result

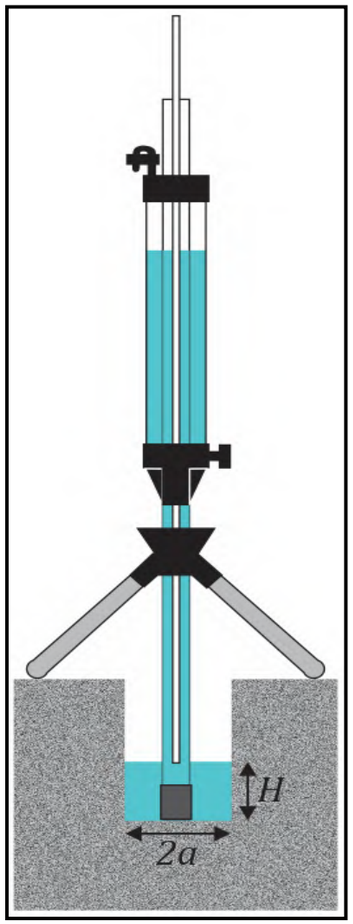

TOWN OF CALEDON
PLANNING
RECEIVED
Jul 12, 2021

Saturated Hydraulic Conductivity Calculation

Project Number:	2017-0646	**Date:**	29-Oct-19
Site Name:	Manors of Belfountain	**Weather:**	12°C, Sunny
CEG Personnel:	Alireza Hejazi	**Precipitation in Previous Two Days:**	No
Test ID:	Test Pit 7, Test 2	**Soil Sample ID:**	
Test Pit Easting (m):	579485	**Test Pit Northing (m):**	4848455
Test Depth (m below existing grade):	0.3	**Test Elevation (masl):**	~403.4 masl, ground elevation ~403.7
Soil Description:	Clay silt, brown, moist		

Reservoir Type (enter "1" for Combined and "2" for Inner reservoir): 1
Enter water Head Height ("H" in cm): 8
Enter the Borehole Radius ("a" in cm): 3

Enter the soil texture-structure category (enter one of the below numbers): 3

1. Compacted, Structure-less, clayey or silty materials such as landfill caps and liners, lacustrine or marine sediments, etc.
2. Soils which are both fine textured (clayey or silty) and unstructured; may also include some fine sands.
3. Most structured soils from clays through loams; also includes unstructured medium and fine sands. The category most frequently applicable for agricultural soils.
4. Coarse and gravely sands; may also include some highly structured soils with large and/or numerous cracks, macropors, etc

Steady State Rate of Water Level Change ("R" in cm/min): 3.0000

Res Type	35.22
H	8
a	3
H/a	2.6667
a*	0.12
C0.01	1.0666
C0.04	1.1283
C0.12	1.11
C0.36	1.11
C	1.11
R	3.000
Q	1.761
pi	3.1415

$\alpha^* =$	**0.12**	*1/cm*
$C =$	**1.109993**	
$Q =$	**1.761**	*cm³/sec*
$K_{fs} =$	**2.29E-03**	*cm/sec*
	1.38E-01	*cm/min*
	2.29E-05	*m/sec*
	5.42E-02	*inch/min*
	9.03E-04	*inch/sec*
$\Phi_m =$	**1.91E-02**	*cm²/min*

Input Result

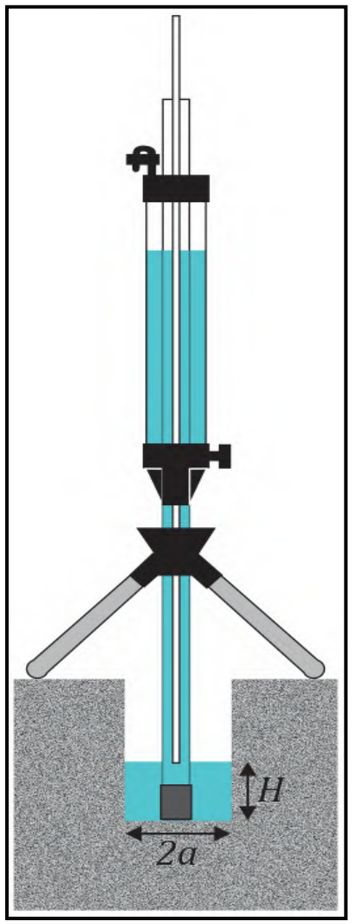

TOWN OF CALEDON
PLANNING
RECEIVED

Jul 12, 2021

APPENDIX E

Hydrographs

TOWN OF CALEDON
PLANNING
RECEIVED

Jul 12, 2021

Manors of Belfountain Hydrogeological Investigation
Groundwater Monitoirng
MW1D-14 Hydrograph

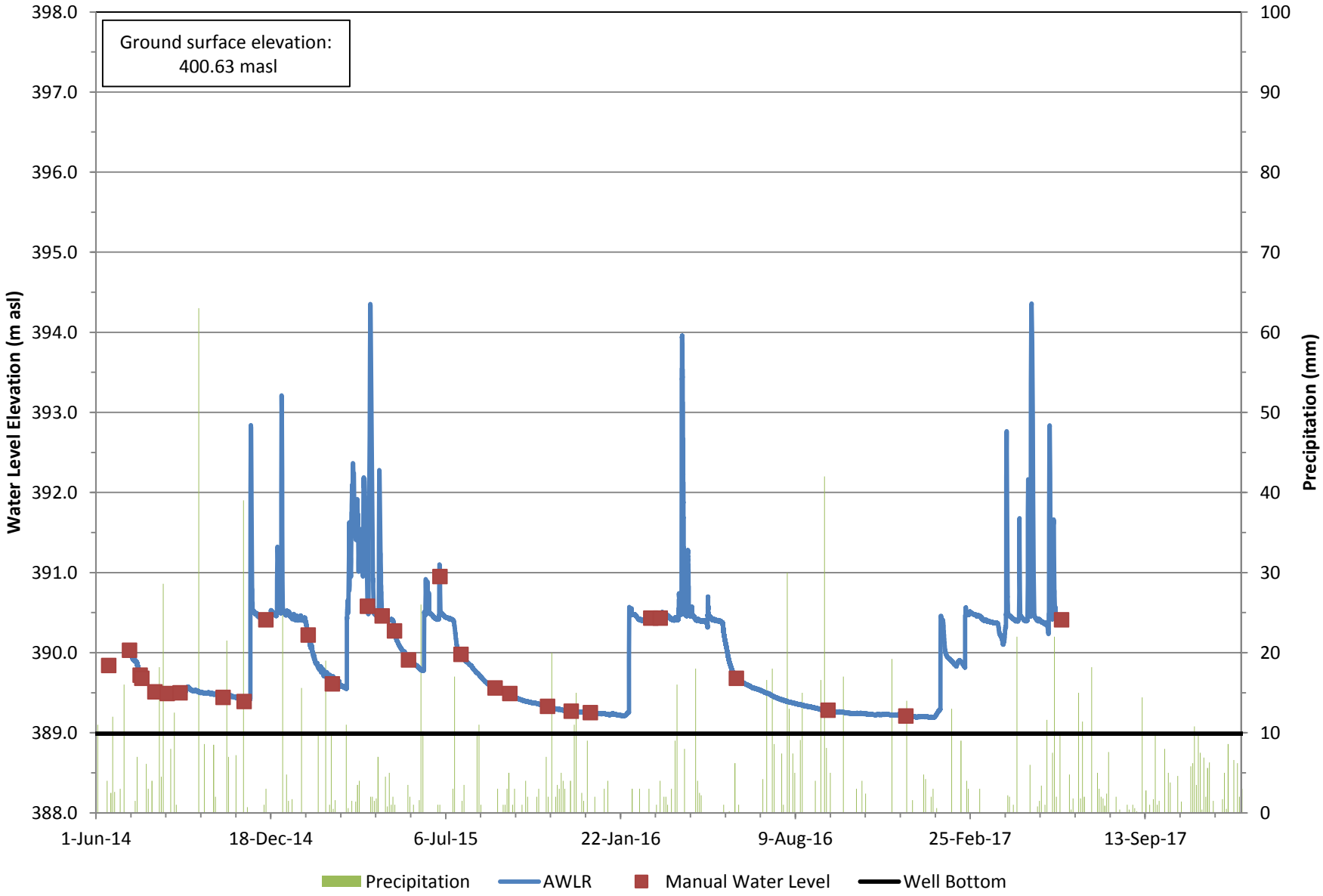

BURNSIDE

Prepared By: S.B.
Updated By: T.H. (COLE)
12/12/2017

COLE

Appendix E
2017-0646

TOWN OF CALEDON
PLANNING
RECEIVED

Jul 12, 2021

Manors of Belfountain Hydrogeological Investigation
Groundwater Monitoirng
MW1S-14 Hydrograph

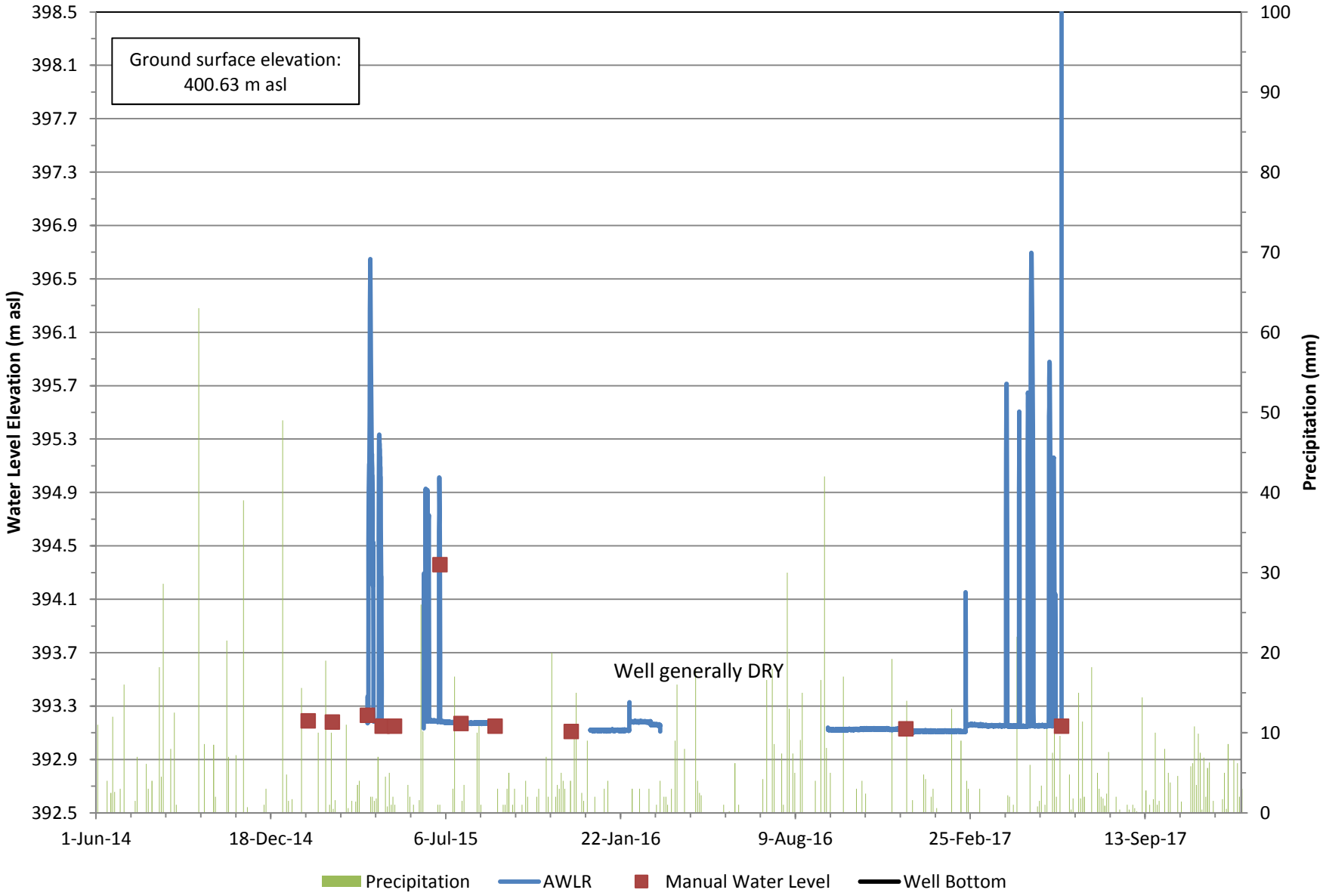

BURNSIDE
Prepared By: S.B.
Updated By: T.H. (COLE)
12/12/2017

COLE

Appendix E
2017-0646

TOWN OF CALEDON
PLANNING
RECEIVED

Jul 12, 2021

Manors of Belfountain Hydrogeological Investigation
Groundwater Monitoirng
OW1 Hydrograph

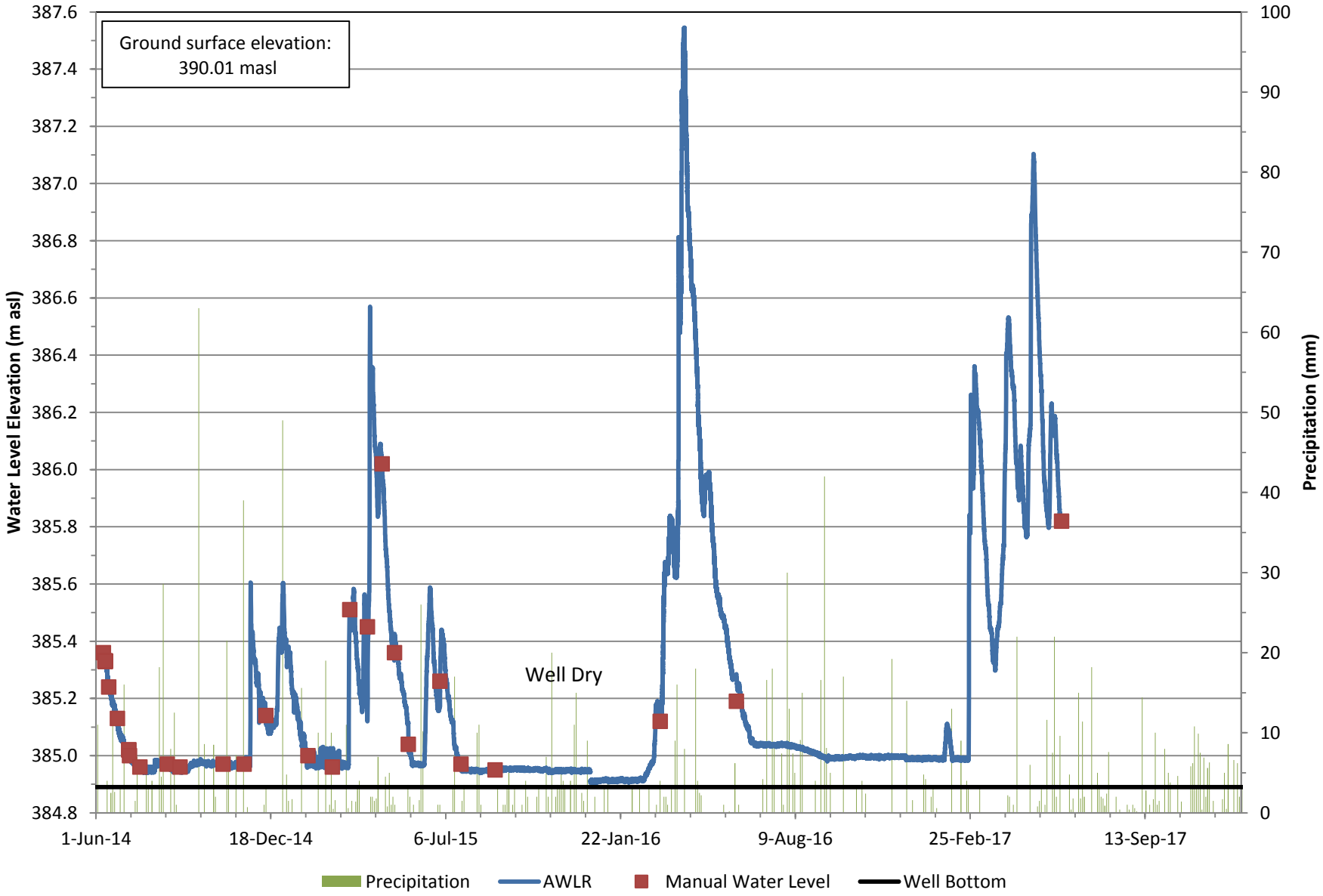

BURNSIDE
Prepared By: S.B.
Updated By: T.H. (COLE)
12/12/2017

COLE

Appendix E
2017-0646

TOWN OF CALEDON
PLANNING
RECEIVED

Jul 12, 2021

Manors of Belfountain Hydrogeological Investigation
Groundwater Monitoirng
Piezo beside PZ2-14 Hydrograph

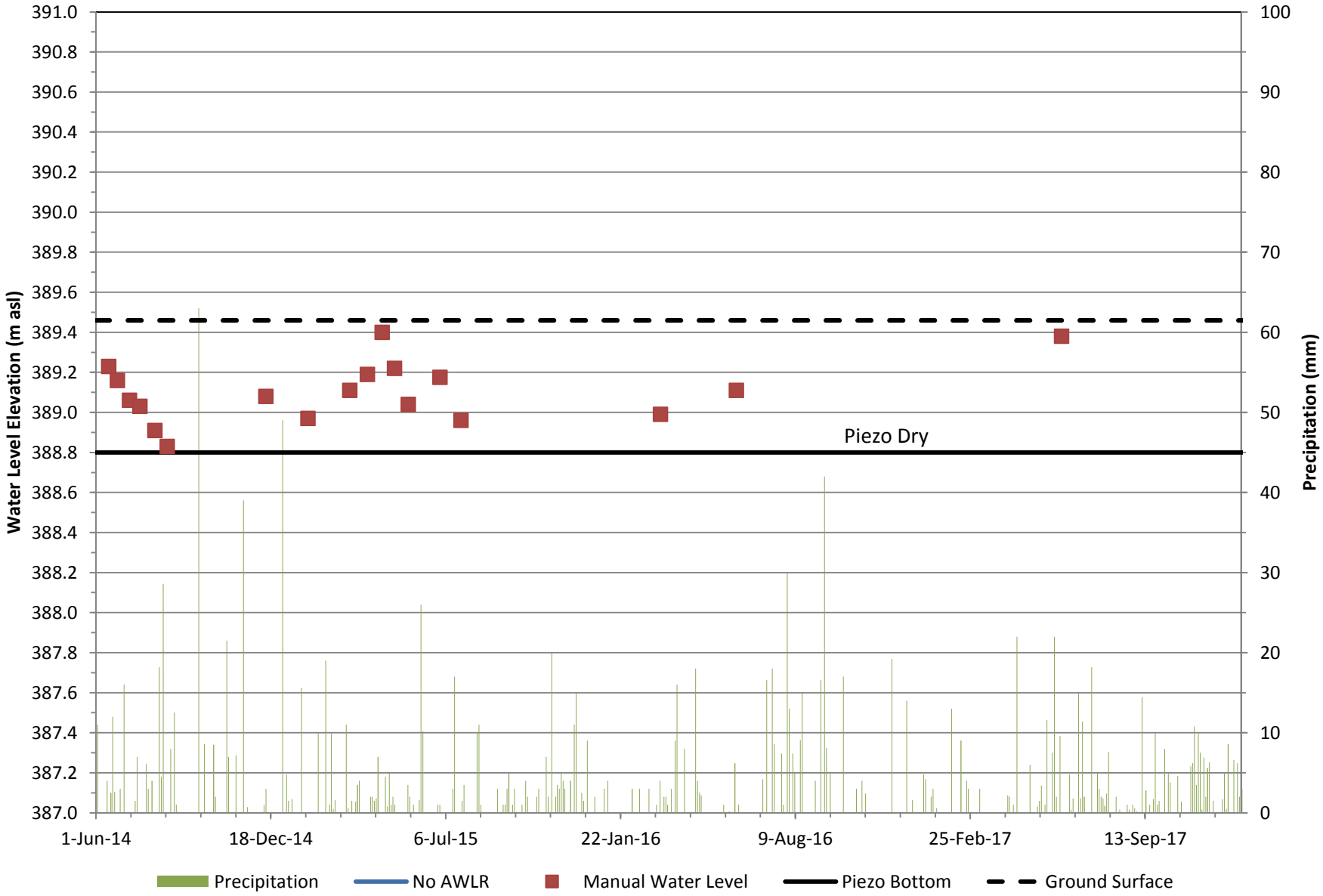

BURNSIDE
Prepared By: S.B.
Updated By: T.H. (COLE)
12/12/2017

COLE

Appendix E
2017-0646

TOWN OF CALEDON
PLANNING
RECEIVED

Jul 12, 2021

Manors of Belfountain Hydrogeological Investigation
Groundwater Monitoirng
PW1 Hydrograph

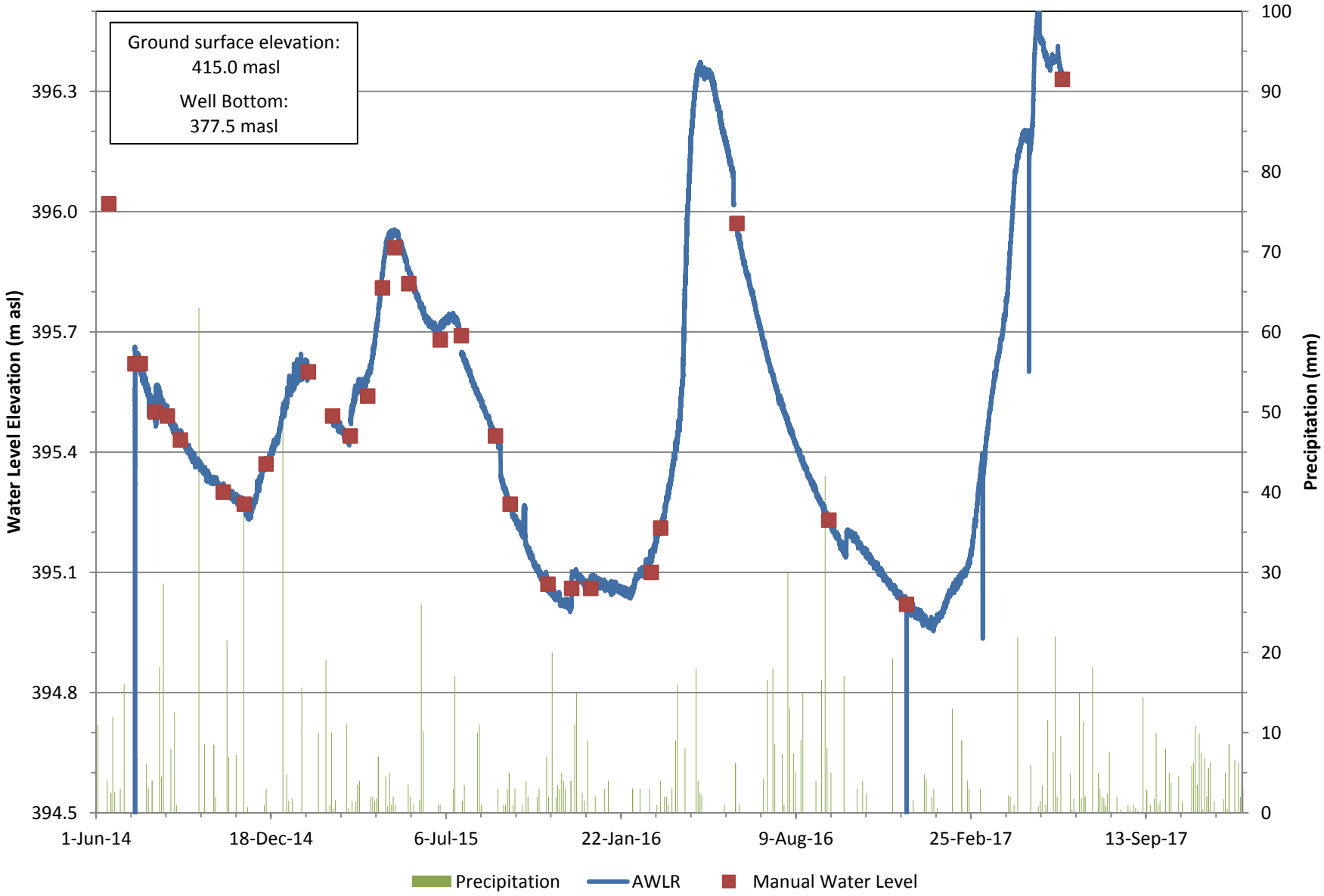

BURNSIDE
Prepared By: S.B.
Updated By: T.H. (COLE)
12/12/2017

COLE

Appendix E
2017-0646

TOWN OF CALEDON
PLANNING
RECEIVED

Jul 12, 2021

Manors of Belfountain Hydrogeological Investigation
Groundwater Monitoirng
PW2 Hydrograph

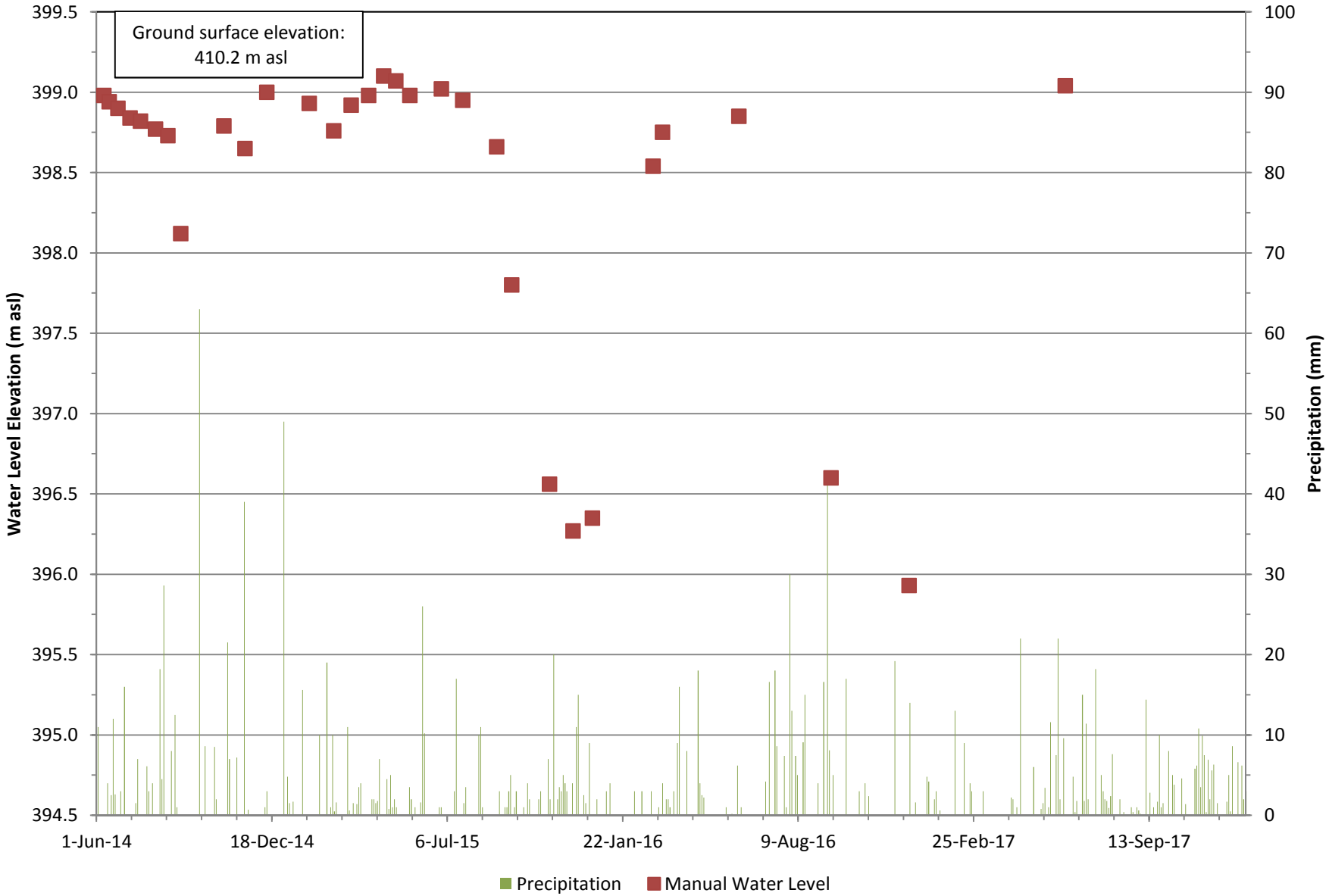

BURNSIDE
Prepared By: S.B.
Updated By: T.H. (COLE)
12/12/2017

COLE

Appendix E
2017-0646

TOWN OF CALEDON
PLANNING
RECEIVED

Jul 12, 2021

Manors of Belfountain Hydrogeological Investigation
Groundwater Monitoirng
PW3 Hydrograph

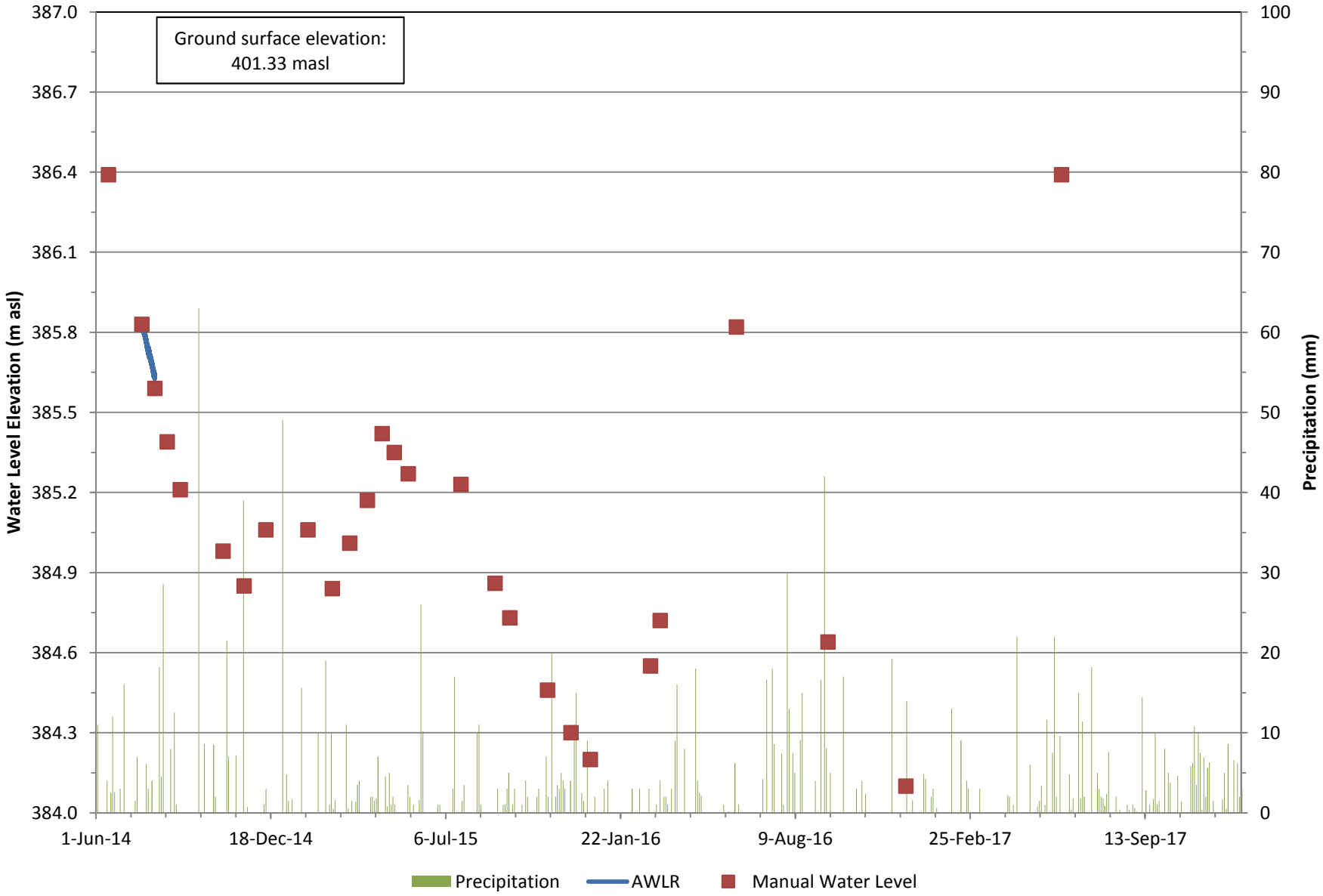

BURNSIDE
Prepared By: S.B.
Updated By: T.H. (COLE)
12/12/2017

COLE

Appendix E
2017-0646

TOWN OF CALEDON
PLANNING
RECEIVED

Jul 12, 2021

Manors of Belfountain Hydrogeological Investigation
Groundwater Monitoirng
PZ1-14 Hydrograph

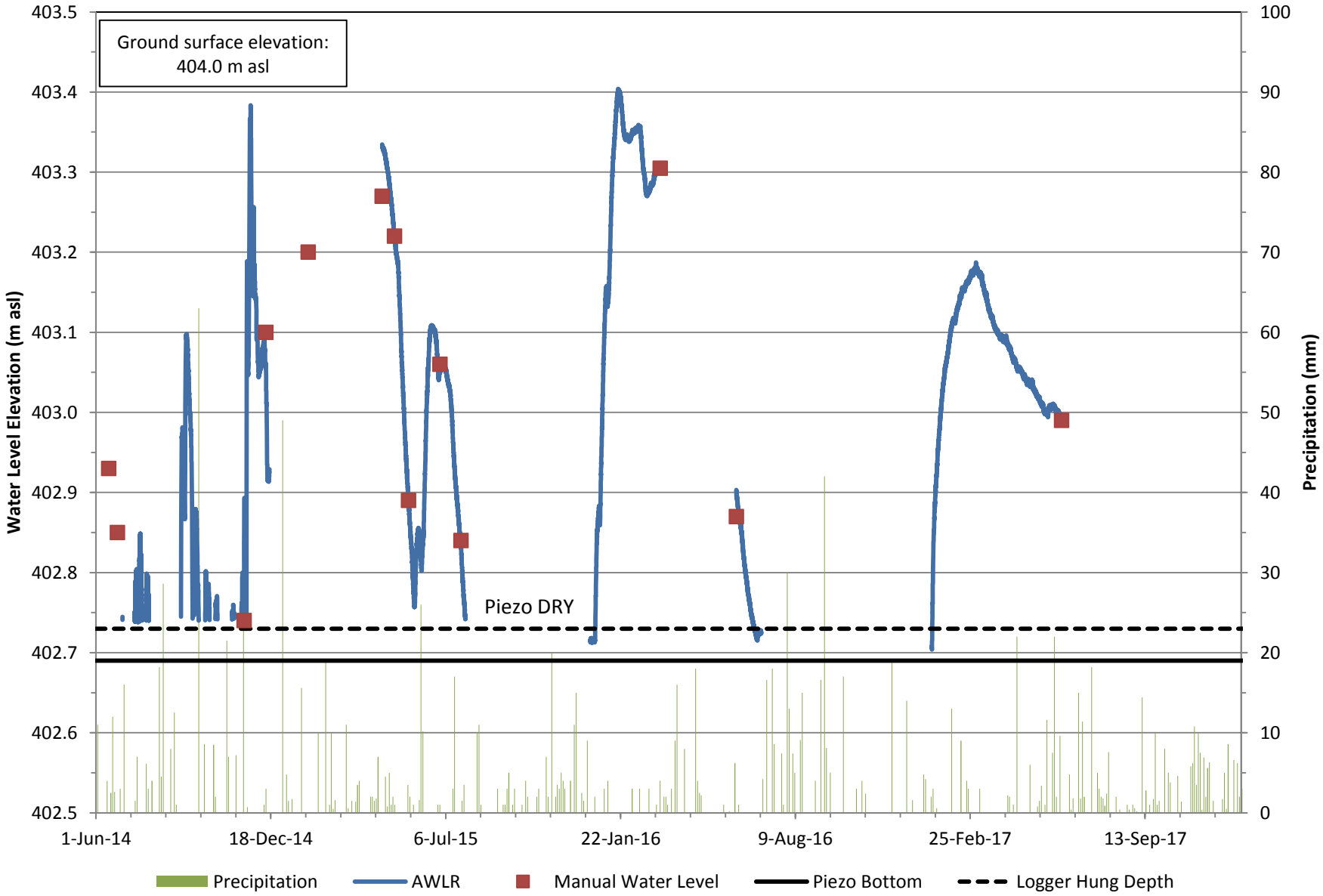

BURNSIDE

Prepared By: S.B.
Updated By: T.H. (COLE)
12/12/2017

COLE

Appendix E
2017-0646

TOWN OF CALEDON
PLANNING
RECEIVED

Jul 12, 2021

Manors of Belfountain Hydrogeological Investigation
Groundwater Monitoirng
PZ2-14 Hydrograph (2)

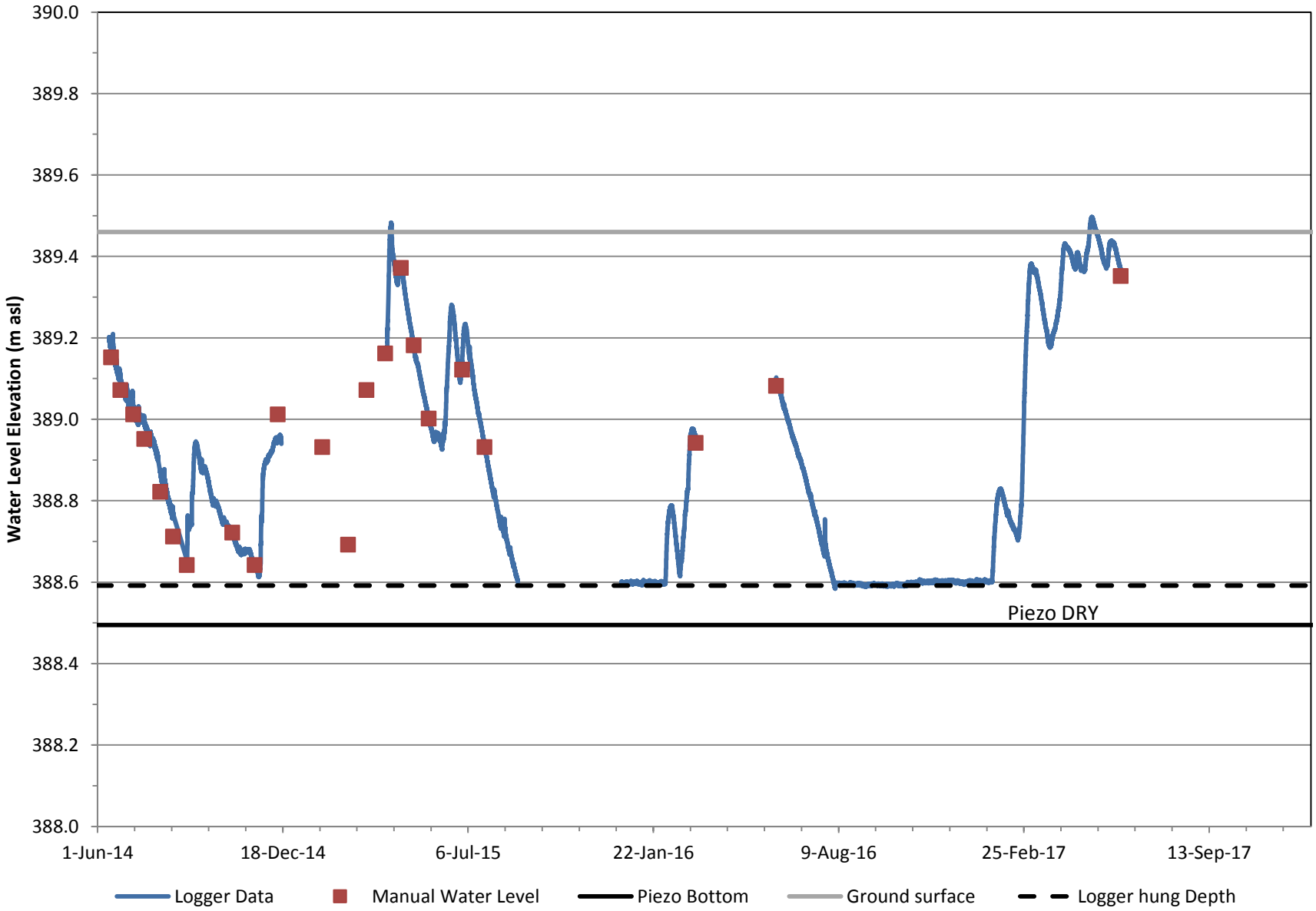

Prepared By: S.B.
Updated By: T.H. (COLE)
12/12/2017

COLE

Appendix E
2017-0646

TOWN OF CALEDON
PLANNING
RECEIVED

Jul 12, 2021

Manors of Belfountain Hydrogeological Investigation
Groundwater Monitoirng
SG1-14 Hydrograph

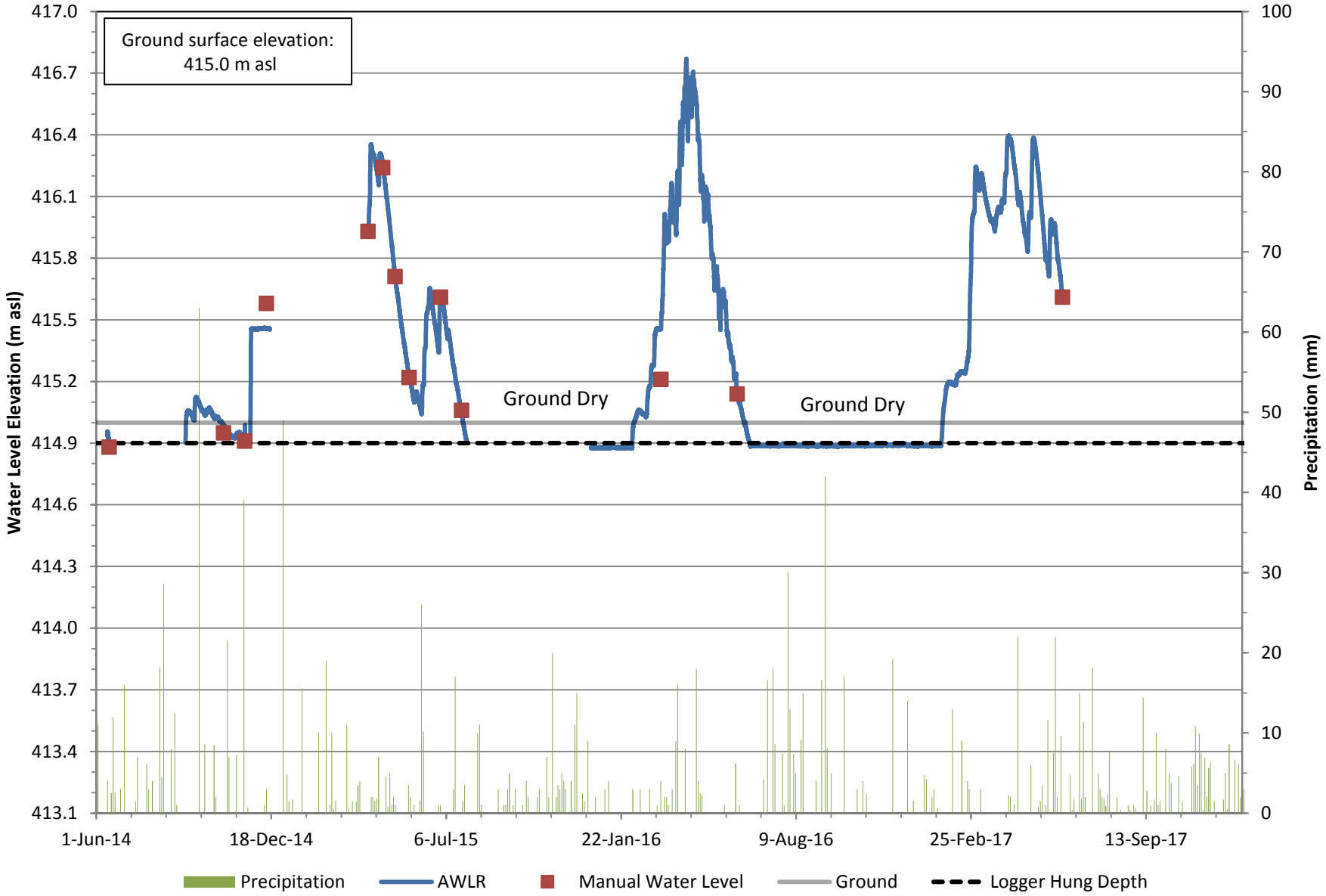

BURNSIDE
Prepared By: S.B.

COLE

Appendix
2017-0646

TOWN OF CALEDON
PLANNING
RECEIVED

Jul 12, 2021

Manors of Belfountain Hydrogeological Investigation
Groundwater Monitoirng
TW1 Hydrograph

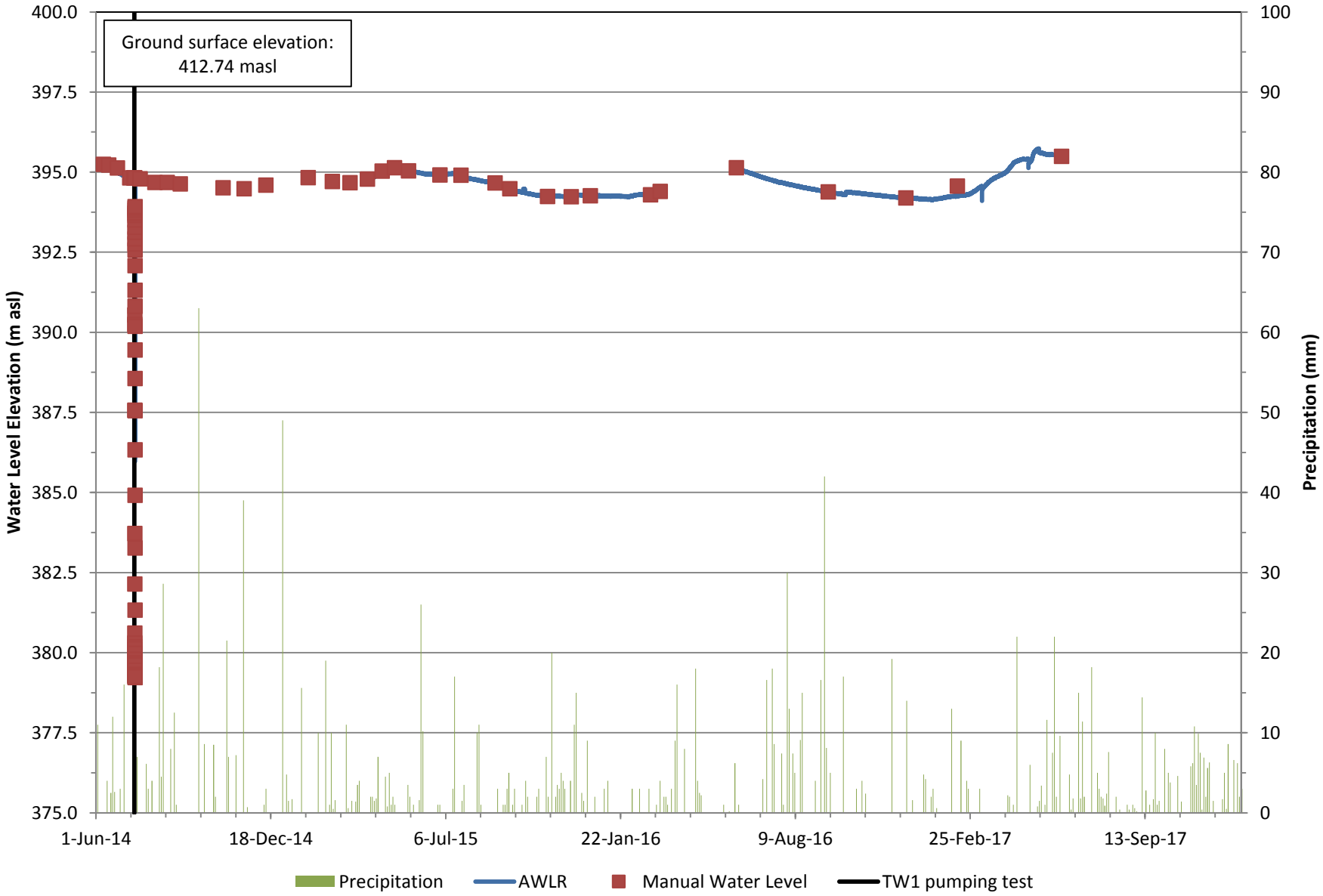

BURNSIDE
Prepared By: S.B.
Updated By: T.H. (COLE)
12/12/2017

COLE

Appendix E
2017-0646

TOWN OF CALEDON
PLANNING
RECEIVED

Jul 12, 2021

Manors of Belfountain Hydrogeological Investigation
Groundwater Monitoirng
TW1-09 Hydrograph

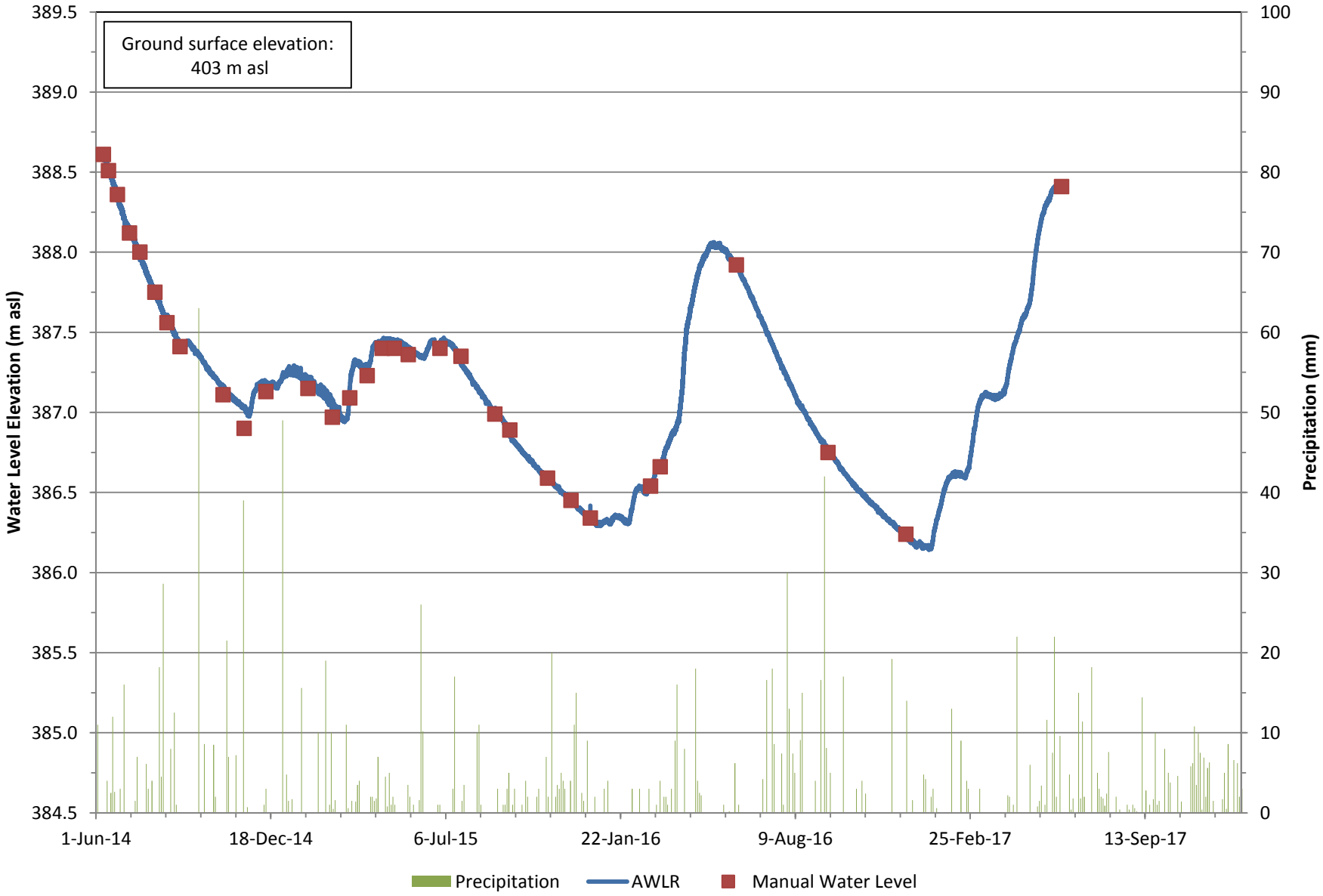

BURNSIDE
Prepared By: S.B.
Updated By: T.H. (COLE)
12/12/2017

COLE

Appendix E
2017-0646

TOWN OF CALEDON
PLANNING
RECEIVED

Jul 12, 2021

Manors of Belfountain Hydrogeological Investigation
Groundwater Monitoirng
TW2 (A165390) Hydrograph

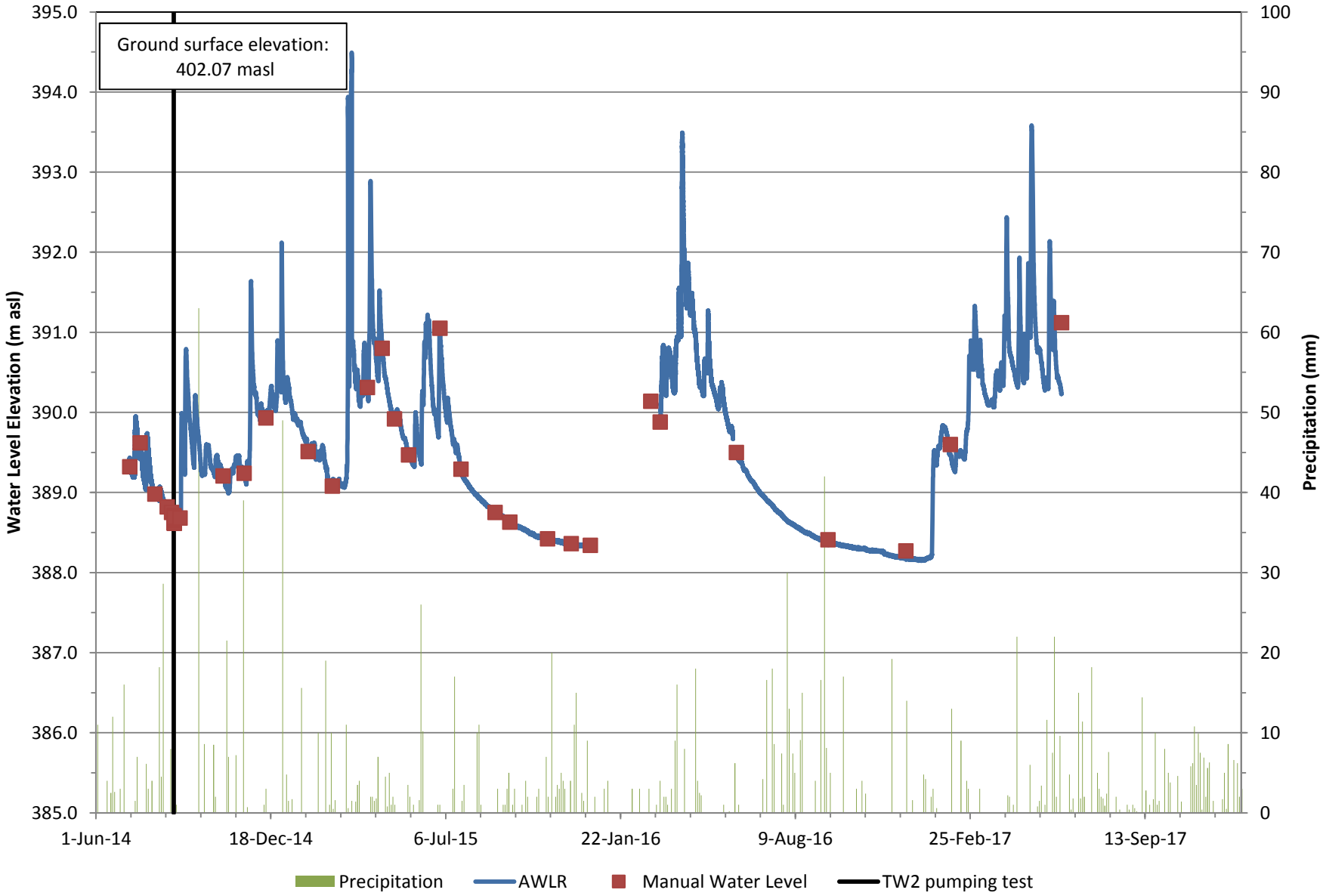

BURNSIDE
Prepared By: S.B.
Updated By: T.H. (COLE)
12/12/2017

COLE

Appendix E
2017-0646

TOWN OF CALEDON
PLANNING
RECEIVED

Jul 12, 2021

Manors of Belfountain Hydrogeological Investigation
Groundwater Monitoirng
TW3 Hydrograph

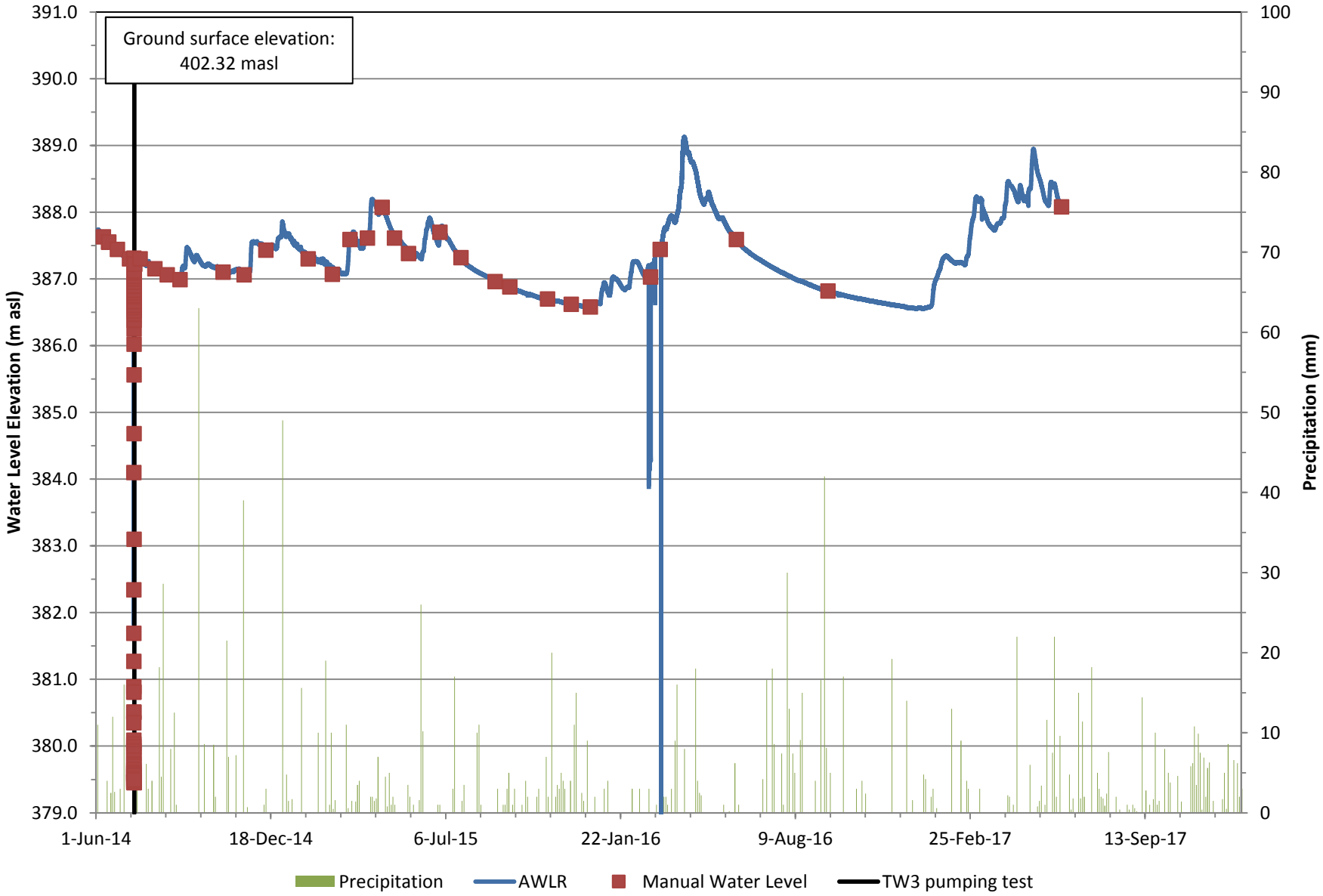

BURNSIDE
Prepared By: S.B.
Updated By: T.H. (COLE)
12/12/2017

COLE

Appendix E
2017-0646

TOWN OF CALEDON
PLANNING
RECEIVED

Jul 12, 2021

Manors of Belfountain Hydrogeological Investigation
Groundwater Monitoirng
TW4 Hydrograph

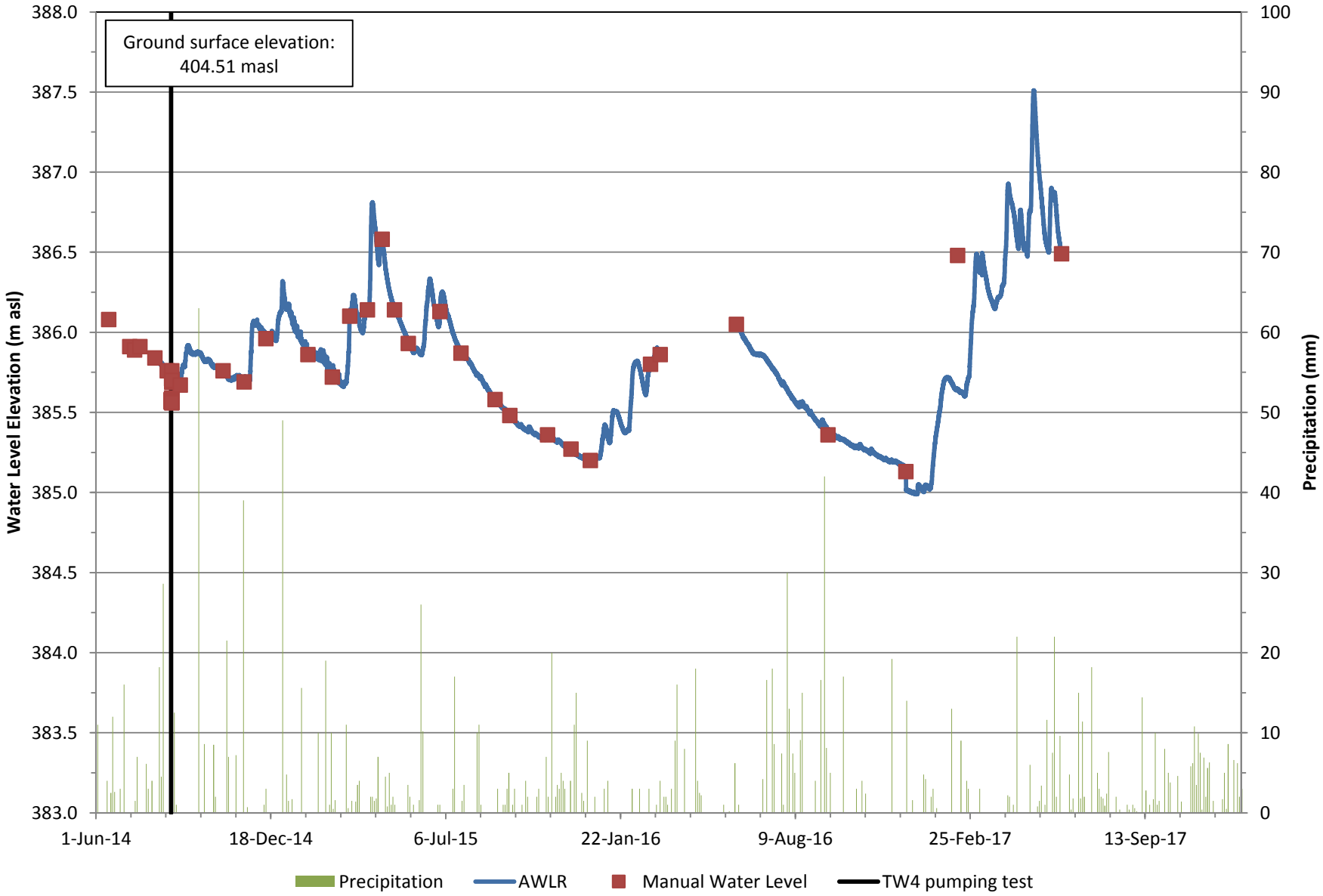

BURNSIDE
Prepared By: S.B.
Updated By: T.H. (COLE)
12/12/2017

COLE

Appendix E
2017-0646

TOWN OF CALEDON
PLANNING
RECEIVED

Jul 12, 2021

Manors of Belfountain Hydrogeological Investigation
Groundwater Monitoirng
TW5 Hydrograph

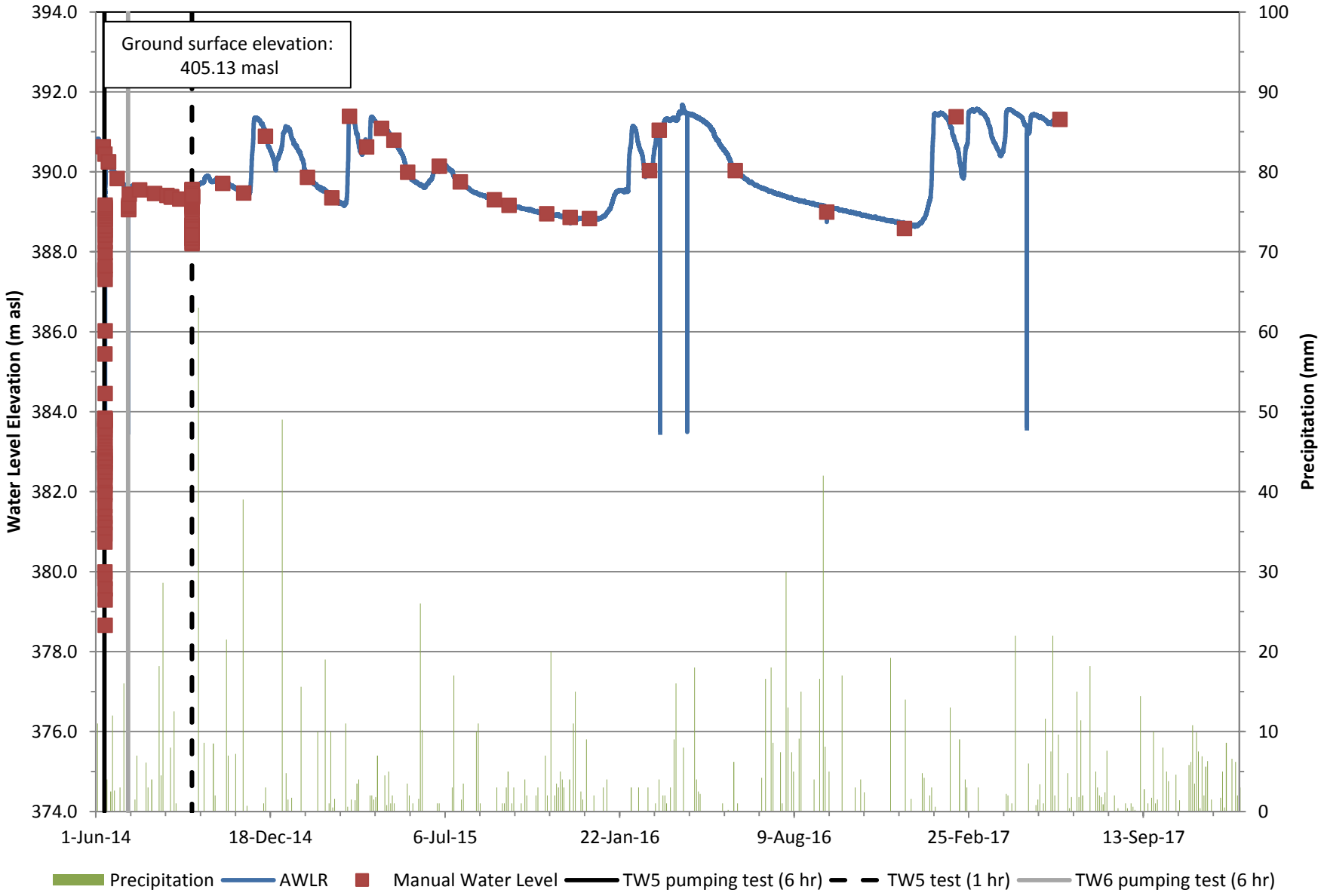

BURNSIDE
Prepared By: S.B.
Updated By: T.H. (COLE)
12/12/2017

COLE

Appendix E
2017-0646

TOWN OF CALEDON
PLANNING
RECEIVED

Jul 12, 2021

Manors of Belfountain Hydrogeological Investigation
Groundwater Monitoirng
TW6 Hydrograph

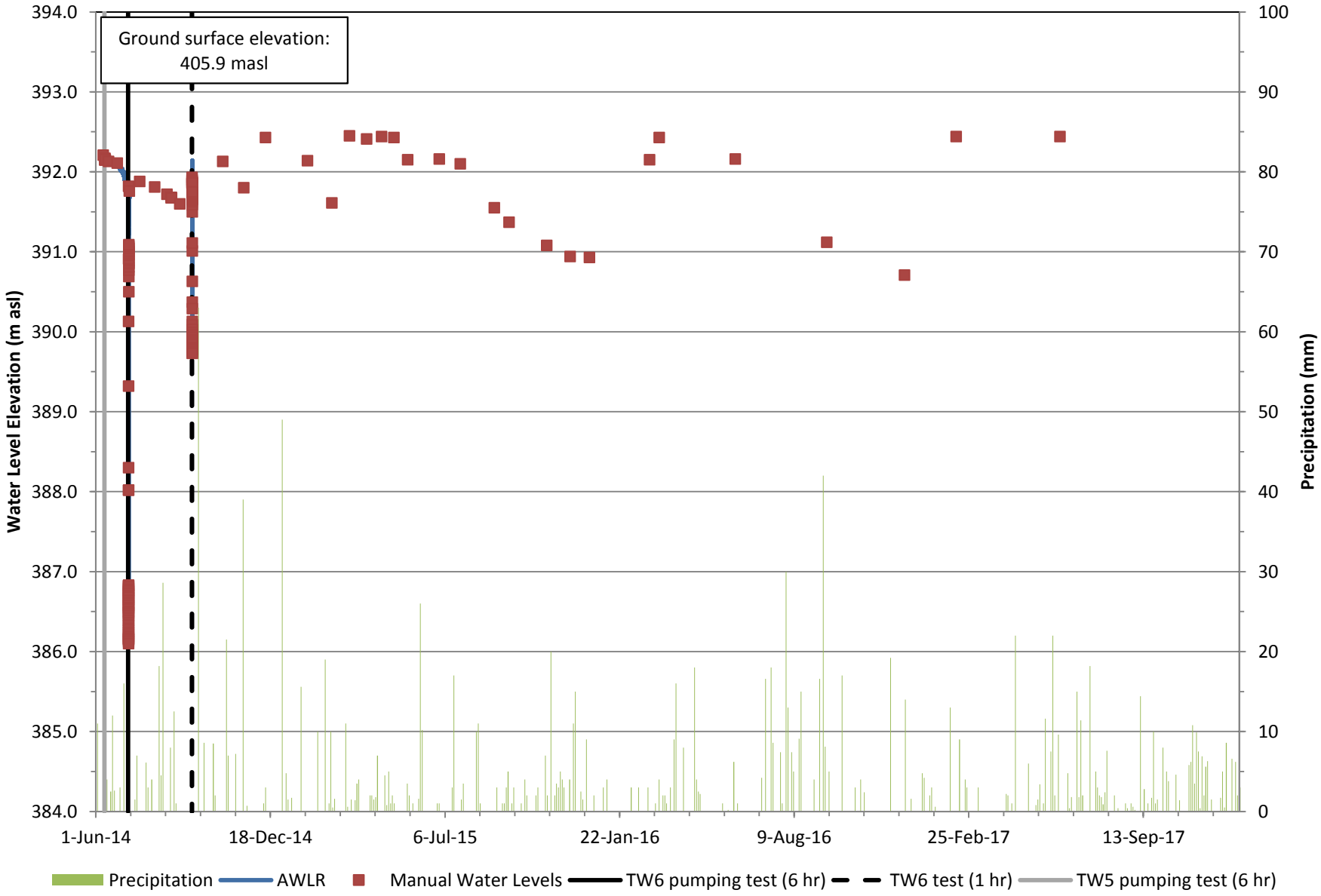

BURNSIDE
Prepared By: S.B.
Updated By: T.H. (COLE)
12/12/2017

COLE

Appendix E
2017-0646

TOWN OF CALEDON
PLANNING
RECEIVED

Jul 12, 2021

APPENDIX F

Groundwater Quality

TOWN OF CALEDON
PLANNING
RECEIVED

Jul 12, 2021

				Well ID	PW2				OW1			TW1			
				Sample Date	12/04/2014	04/07/2015	06/29/2015	09/17/2015	11/26/2015	12/04/2014	04/07/2015	06/29/2015	05/02/2017	03/10/2017	06/05/2018	03/08/2020
				Lab sample ID	6152997	6430214	6701615	6988488	7237258	6153004	6430223	6701613	8358383	8244996	GWT317	L2425657-1
Sample Parameter	**Unit**	**ODWS Criteria**	**RDL**													
Electrical Conductivity	uS/cm		2	-	595	-	596	-	-	601	-	-	705	-	-
pH	pH Units	6.5 - 8.5	NA	-	7.92	-	8.16	-	-	8.1	-	-	8.14	-	-
Saturation pH				-	7.00	-	6.99	-	-	6.98	-	-	6.89	-	-
Langelier Index				-	0.92	-	1.17	-	-	1.12	-	-	1.25	-	-
Total Hardness (as CaCO3)	mg/L	80-100	0.5	-	281	-	295	-	-	265	-	-	361	-	-
Total Dissolved Solids	mg/L	500	20	-	304	-	330	-	-	294	-	-	396	-	413
Alkalinity (as CaCO3)	mg/L	30-500	5	-	259	-	251	-	-	265	-	-	256	-	-
Bicarbonate (as CaCO3)	mg/L	-	5	-	259	-	251	-	-	265	-	-	256	-	-
Carbonate (as CaCO3)	mg/L	-	5	-	<5	-	<5	-	-	<5	-	-	<5	-	-
Hydroxide (as CaCO3)	mg/L	-	5	-	<5	-	<5	-	-	<5	-	-	<5	-	-
Fluoride	mg/L	1.5	0.1	-	<0.05	-	<0.25	-	-	<0.05	-	-	0.19	-	-
Chloride	mg/L	250	0.2	-	22.3	-	22.9	-	-	3.48	-	-	14.3	-	-
Nitrate as N	mg/L	10	0.1	6.51	3.44	4.15	2.75	2.12	0.89	0.85	1.89	<0.05	<0.05	<0.05	<0.05
Nitrite as N	mg/L	1	0.1	-	<0.05	-	<0.25	<0.05	-	<0.05	-	<0.05	<0.05	<0.05	<0.05
Bromide	mg/L	-	0.1	-	<0.05	-	<0.25	-	-	<0.05	-	-	<0.05	-	-
Sulphate	mg/L	500	0.2	-	18.2	-	22.0	-	-	14	-	-	105	-	71.5
Ortho Phosphate as P	mg/L	-	0.2	-	<0.10	-	<0.50	-	-	<0.10	-	-	<0.10	-	-
Reactive Silica	mg/L	-	0.05	-	7.52	-	8.45	-	-	5.38	-	-	12.7	-	-
Ammonia as N	mg/L	-	0.02	-	0.3	-	<0.02	-	-	0.08	-	-	<0.02	-	-
Total Phosphorus	mg/L	-	0.05	-	<0.05	-	<0.05	-	-	0.17	-	-	<0.05	-	-
Total Organic Carbon	mg/L	-	0.5	-	0.5	-	0.7	-	-	2	-	-	1.3	-	-
Colour	TCU	5	5	-	<5	-	<5	-	-	<5	-	-	<5	-	-
Turbidity	NTU	5	0.5	-	4.6	-	1.2	-	-	269	-	-	135	-	23.3
Calcium	mg/L	-	0.05	-	73.6	-	77.6	-	-	71.9	-	-	97.9	-	-
Magnesium	mg/L	-	0.05	-	23.5	-	24.7	-	-	20.7	-	-	28.4	-	-
Sodium	mg/L	200	0.05	-	8.20	-	9.37	-	-	7.68	-	-	5.27	-	-
Potassium	mg/L	-	0.05	-	0.90	-	0.84	-	-	2.16	-	-	1.18	-	-
Aluminum	mg/L	0.1	0.004	-	<0.004	-	<0.004	-	-	<0.004	-	-	0.006	-	-
Antimony	mg/L	0.006	0.003	-	<0.003	-	<0.003	-	-	<0.003	-	-	<0.003	-	-
Arsenic	mg/L	0.025	0.003	-	<0.003	-	<0.003	-	-	<0.003	-	-	0.006	-	-
Barium	mg/L	1	0.002	-	0.056	-	0.050	-	-	0.048	-	-	0.073	-	-
Beryllium	mg/L	-	0.001	-	<0.001	-	<0.001	-	-	<0.001	-	-	<0.001	-	-
Boron	mg/L	5	0.01	-	<0.010	-	<0.010	-	-	<0.010	-	-	0.016	-	-
Cadmium	mg/L	0.005	0.001	-	<0.001	-	<0.001	-	-	<0.001	-	-	<0.001	-	-
Chromium	mg/L	0.05	0.003	-	0.005	-	<0.003	-	-	<0.003	-	-	<0.003	-	-
Cobalt	mg/L	-	0.001	-	<0.001	-	<0.001	-	-	<0.001	-	-	<0.001	-	-
Copper	mg/L	1	0.003	-	<0.003	-	<0.003	-	-	<0.003	-	-	<0.003	-	-
Iron	mg/L	0.3	0.01	-	<0.010	-	<0.010	-	-	<0.010	-	-	0.167	-	4.89
Lead	mg/L	0.01	0.002	-	<0.002	-	<0.002	-	-	<0.002	-	-	<0.002	-	-
Manganese	mg/L	0.05	0.002	-	<0.002	-	<0.002	-	-	<0.002	-	-	0.019	-	-
Mercury	mg/L	0.001	0.0001	-	<0.0001	-	<0.0001	-	-	<0.0001	-	-	<0.0001	-	-
Molybdenum	mg/L	-	0.002	-	<0.002	-	<0.002	-	-	<0.002	-	-	<0.002	-	-
Nickel	mg/L	-	0.003	-	<0.003	-	0.004	-	-	<0.003	-	-	<0.003	-	-
Selenium	mg/L	0.01	0.004	-	<0.004	-	<0.004	-	-	<0.004	-	-	<0.004	-	-
Silver	mg/L	-	0.002	-	<0.002	-	<0.002	-	-	<0.002	-	-	<0.002	-	-
Strontium	mg/L	-	0.005	-	0.126	-	0.126	-	-	0.102	-	-	0.588	-	-
Thallium	mg/L	-	0.006	-	<0.006	-	<0.006	-	-	<0.006	-	-	<0.006	-	-
Tin	mg/L	-	0.002	-	<0.002	-	<0.002	-	-	<0.002	-	-	<0.002	-	-
Titanium	mg/L	-	0.002	-	<0.002	-	<0.002	-	-	<0.002	-	-	<0.002	-	-
Tungsten	mg/L	-	0.01	-	<0.010	-	<0.010	-	-	<0.010	-	-	<0.010	-	-
Uranium	mg/L	0.02	0.002	-	<0.002	-	<0.002	-	-	<0.002	-	-	<0.002	-	-
Vanadium	mg/L	-	0.002	-	<0.002	-	<0.002	-	-	<0.002	-	-	<0.002	-	-
Zinc	mg/L	5	0.005	-	0.022	-	0.021	-	-	0.017	-	-	0.034	-	-
Zirconium	mg/L	-	0.004	-	<0.004	-	<0.004	-	-	<0.004	-	-	<0.004	-	-
% Difference/ Ion Balance	%	-	NA	-	3.400	-	0.104	-	-	0.6	-	-	1.56	-	-

Notes:
ODWS = Ontario Drinking Water Standards
RDL = Reportable Detection Limit
-' = No value available
Indicates exceedance of ODWS criteria
Samples 7607710-7607739 required dilution prior to analysis for Anions due to the presence of non-target Ions; the RDLs were adjusted to reflect the dilution.

TOWN OF CALEDON
PLANNING
RECEIVED

Jul 12, 2021

				Well ID	TW2											
				Sample Date	04/07/2015	06/29/2015	09/17/2015	11/26/2015	03/08/2016	06/02/2016	09/15/2016	12/13/2016	03/10/2017	05/02/2017	06/05/2018	03/08/2020
				Lab sample ID	6430142	6701611	6988471	7237258	7430218	7607710	7853176	8091589	8244997	8358385	GWT321	L2425657-2
Sample Parameter	**Unit**	**ODWS Criteria**	**RDL**													
Electrical Conductivity	uS/cm		2		478	-	561	-	-	526	575	-	392	-	-	-
pH	pH Units	6.5 - 8.5	NA		7.89	-	8.14	-	-	8.03	8.17	-	8.02	-	-	-
Saturation pH					7.15	-	6.96	-	-	6.97	6.96	-	7.36	-	-	-
Langelier Index					0.74	-	1.18	-	-	1.06	1.21	-	0.66	-	-	-
Total Hardness (as CaCO3)	mg/L	80-100	0.5		224	-	299	-	-	276	294	-	181	-	-	-
Total Dissolved Solids	mg/L	500	20		262	-	308	-	-	290	308	-	198	-	-	75
Alkalinity (as CaCO3)	mg/L	30-500	5		212	-	263	-	-	264	271	-	163	-	-	-
Bicarbonate (as CaCO3)	mg/L	-	5		212	-	263	-	-	264	271	-	163	-	-	-
Carbonate (as CaCO3)	mg/L	-	5		<5	-	<5	-	-	<5	<5	-	<5	-	-	-
Hydroxide (as CaCO3)	mg/L	-	5		<5	-	<5	-	-	<5	<5	-	<5	-	-	-
Fluoride	mg/L	1.5	0.1		<0.05	-	<0.25	-	-	<0.10	<0.05	-	<0.05	-	-	-
Chloride	mg/L	250	0.2		18.80	-	6.85	-	-	5.59	5.96	-	16.70	-	-	-
Nitrate as N	mg/L	10	0.1		0.84	0.70	1.00	0.62	0.58	1.18	0.82	0.67	1.16	1.90	0.70	1.02
Nitrite as N	mg/L	1	0.1		<0.05	-	<0.25	<0.05	-	<0.10	<0.05	-	<0.05	<0.05	<0.05	0.043
Bromide	mg/L	-	0.1		<0.05	-	<0.25	-	-	<0.10	<0.05	-	<0.05	-	-	-
Sulphate	mg/L	500	0.2		10.0	-	23.5	-	-	19.0	25.6	-	13.8	-	-	1.38
Ortho Phosphate as P	mg/L	-	0.2		0.35	-	<0.50	-	-	<0.20	<0.10	-	<0.10	-	-	-
Reactive Silica	mg/L	-	0.05		5.78	-	11.50	-	-	9.90	11.80	-	3.65	-	-	-
Ammonia as N	mg/L	-	0.02		<0.02	-	<0.02	-	-	<0.02	<0.02	-	0.04	-	-	-
Total Phosphorus	mg/L	-	0.05		<0.05	-	<0.05	-	-	<0.05	0.05	-	<0.05	-	-	-
Total Organic Carbon	mg/L	-	0.5		1.7	-	1.1	-	-	0.7	1.1	-	2.4	-	-	-
Colour	TCU	5	5		<5	-	<5	-	-	<5	<5	-	<5	-	-	-
Turbidity	NTU	5	0.5		2.7	-	4.3	-	-	6.4	110.0	-	3.3	-	-	66.4
Calcium	mg/L	-	0.05		60.9	-	79.5	-	-	73.3	77.6	-	48.8	-	-	-
Magnesium	mg/L	-	0.05		17.5	-	24.3	-	-	22.6	24.3	-	14.4	-	-	-
Sodium	mg/L	200	0.05		6.79	-	3.47	-	-	2.65	3.10	-	6.39	-	-	-
Potassium	mg/L	-	0.05		1.53	-	1.12	-	-	1.03	1.12	-	1.26	-	-	-
Aluminum	mg/L	0.1	0.004		<0.004	-	<0.004	-	-	0.006	0.014	-	0.017	-	-	-
Antimony	mg/L	0.006	0.003		<0.003	-	<0.003	-	-	<0.003	<0.003	-	<0.003	-	-	-
Arsenic	mg/L	0.025	0.003		<0.003	-	<0.003	-	-	<0.003	<0.003	-	<0.003	-	-	-
Barium	mg/L	1	0.002		0.042	-	0.088	-	-	0.063	0.092	-	0.030	-	-	-
Beryllium	mg/L	-	0.001		<0.001	-	<0.001	-	-	<0.001	<0.001	-	<0.001	-	-	-
Boron	mg/L	5	0.01		0.010	-	<0.010	-	-	0.012	<0.010	-	<0.010	-	-	-
Cadmium	mg/L	0.005	0.001		<0.001	-	<0.001	-	-	<0.001	<0.001	-	<0.001	-	-	-
Chromium	mg/L	0.05	0.003		0.005	-	<0.003	-	-	<0.003	<0.003	-	<0.003	-	-	-
Cobalt	mg/L	-	0.001		<0.001	-	<0.001	-	-	<0.001	<0.001	-	<0.001	-	-	-
Copper	mg/L	1	0.003		<0.003	-	<0.003	-	-	<0.003	<0.003	-	<0.003	-	-	-
Iron	mg/L	0.3	0.01		<0.010	-	<0.010	-	-	<0.010	<0.010	-	<0.010	-	-	9.18
Lead	mg/L	0.01	0.002		<0.002	-	<0.002	-	-	<0.002	<0.002	-	<0.002	-	-	-
Manganese	mg/L	0.05	0.002		<0.002	-	<0.002	-	-	0.004	0.003	-	<0.002	-	-	-
Mercury	mg/L	0.001	0.0001		<0.0001	-	<0.0001	-	-	<0.0001	<0.0001	-	<0.0001	-	-	-
Molybdenum	mg/L	-	0.002		<0.002	-	<0.002	-	-	<0.002	<0.002	-	<0.002	-	-	-
Nickel	mg/L	-	0.003		<0.003	-	0.004	-	-	<0.003	<0.003	-	<0.003	-	-	-
Selenium	mg/L	0.01	0.004		<0.004	-	<0.004	-	-	<0.004	<0.004	-	<0.004	-	-	-
Silver	mg/L	-	0.002		<0.002	-	<0.002	-	-	<0.002	<0.002	-	<0.002	-	-	-
Strontium	mg/L	-	0.005		0.087	-	0.128	-	-	0.122	0.134	-	0.078	-	-	-
Thallium	mg/L	-	0.006		<0.006	-	<0.006	-	-	<0.006	<0.006	-	<0.006	-	-	-
Tin	mg/L	-	0.002		<0.002	-	<0.002	-	-	<0.002	<0.002	-	<0.002	-	-	-
Titanium	mg/L	-	0.002		<0.002	-	<0.002	-	-	<0.002	<0.002	-	<0.002	-	-	-
Tungsten	mg/L	-	0.01		<0.010	-	<0.010	-	-	<0.010	<0.010	-	<0.010	-	-	-
Uranium	mg/L	0.02	0.002		<0.002	-	<0.002	-	-	<0.002	<0.002	-	<0.002	-	-	-
Vanadium	mg/L	-	0.002		<0.002	-	<0.002	-	-	<0.002	<0.002	-	<0.002	-	-	-
Zinc	mg/L	5	0.005		0.012	-	0.010	-	-	0.010	0.009	-	0.011	-	-	-
Zirconium	mg/L	-	0.004		<0.004	-	<0.004	-	-	<0.004	<0.004	-	<0.004	-	-	-
% Difference/ Ion Balance	%	-	NA		2.30	-	1.09	-	-	2.23	1.18	-	2.09	-	-	-

Notes:
ODWS = Ontario Drinking Water Standards
RDL = Reportable Detection Limit
-' = No value available
Indicates exceedance of ODWS criteria
Samples 7607710-7607739 required dilution prior to analysis for Anions du

TOWN OF CALEDON
PLANNING
RECEIVED

Jul 12, 2021

			Well ID	TW3					TW4			
			Sample Date	03/08/2016	03/10/2017	05/02/2017	06/05/2018	03/08/2020	03/10/2017	05/02/2017	06/05/2018	03/11/2020
			Lab sample ID	7430216	8245003	8358386	GWT319	L2425657-3	8245009	8358387	GWT323	L2426891-2
Sample Parameter	**Unit**	**ODWS Criteria**	**RDL**									
Electrical Conductivity	uS/cm		2	-	802	-	-	-	558	-	-	-
pH	pH Units	6.5 - 8.5	NA	-	8.14	-	-	-	8.10	-	-	-
Saturation pH				-	6.83	-	-	-	6.99	-	-	-
Langelier Index				-	1.31	-	-	-	1.11	-	-	-
Total Hardness (as CaCO3)	mg/L	80-100	0.5	-	433	-	-	-	275	-	-	-
Total Dissolved Solids	mg/L	500	20	-	484	-	-	513	284	-	-	302
Alkalinity (as CaCO3)	mg/L	30-500	5	-	248	-	-	-	250	-	-	-
Bicarbonate (as CaCO3)	mg/L	-	5	-	248	-	-	-	250	-	-	-
Carbonate (as CaCO3)	mg/L	-	5	-	<5	-	-	-	<5	-	-	-
Hydroxide (as CaCO3)	mg/L	-	5	-	<5	-	-	-	<5	-	-	-
Fluoride	mg/L	1.5	0.1	-	0.1	-	-	-	<0.05	-	-	-
Chloride	mg/L	250	0.2	-	3.41	-	-	-	12.60	-	-	-
Nitrate as N	mg/L	10	0.1	0.54	0.62	0.58	0.19	0.13	3.43	3.22	1.29	2.26
Nitrite as N	mg/L	1	0.1	-	<0.05	<0.05	<0.05	<0.01	<0.05	<0.05	<0.05	<0.01
Bromide	mg/L	-	0.1	-	<0.05	-	-	-	<0.05	-	-	-
Sulphate	mg/L	500	0.2	-	193.0	-	-	147	18.9	-	-	14.9
Ortho Phosphate as P	mg/L	-	0.2	-	<0.10	-	-	-	<0.10	-	-	-
Reactive Silica	mg/L	-	0.05	-	10.70	-	-	-	7.28	-	-	-
Ammonia as N	mg/L	-	0.02	-	0.14	-	-	-	<0.02	-	-	-
Total Phosphorus	mg/L	-	0.05	-	<0.05	-	-	-	<0.05	-	-	-
Total Organic Carbon	mg/L	-	0.5	-	0.7	-	-	-	1.2	-	-	-
Colour	TCU	5	5	-	<5	-	-	-	<5	-	-	-
Turbidity	NTU	5	0.5	-	15.3	-	-	23.9	0.6	-	-	0.28
Calcium	mg/L	-	0.05	-	122.0	-	-	-	74.1	-	-	-
Magnesium	mg/L	-	0.05	-	31.1	-	-	-	21.8	-	-	-
Sodium	mg/L	200	0.05	-	3.42	-	-	-	5.36	-	-	-
Potassium	mg/L	-	0.05	-	1.28	-	-	-	1.01	-	-	-
Aluminum	mg/L	0.1	0.004	-	0.008	-	-	-	0.011	-	-	-
Antimony	mg/L	0.006	0.003	-	<0.003	-	-	-	<0.003	-	-	-
Arsenic	mg/L	0.025	0.003	-	<0.003	-	-	-	<0.003	-	-	-
Barium	mg/L	1	0.002	-	0.045	-	-	-	0.053	-	-	-
Beryllium	mg/L	-	0.001	-	<0.001	-	-	-	<0.001	-	-	-
Boron	mg/L	5	0.01	-	0.020	-	-	-	<0.010	-	-	-
Cadmium	mg/L	0.005	0.001	-	<0.001	-	-	-	<0.001	-	-	-
Chromium	mg/L	0.05	0.003	-	<0.003	-	-	-	<0.003	-	-	-
Cobalt	mg/L	-	0.001	-	<0.001	-	-	-	<0.001	-	-	-
Copper	mg/L	1	0.003	-	<0.003	-	-	-	<0.003	-	-	-
Iron	mg/L	0.3	0.01	-	0.032	-	-	4.51	<0.010	-	-	<0.50
Lead	mg/L	0.01	0.002	-	<0.002	-	-	-	<0.002	-	-	-
Manganese	mg/L	0.05	0.002	-	0.005	-	-	-	<0.002	-	-	-
Mercury	mg/L	0.001	0.0001	-	<0.0001	-	-	-	<0.0001	-	-	-
Molybdenum	mg/L	-	0.002	-	0.002	-	-	-	<0.002	-	-	-
Nickel	mg/L	-	0.003	-	<0.003	-	-	-	<0.003	-	-	-
Selenium	mg/L	0.01	0.004	-	<0.004	-	-	-	<0.004	-	-	-
Silver	mg/L	-	0.002	-	<0.002	-	-	-	<0.002	-	-	-
Strontium	mg/L	-	0.005	-	0.916	-	-	-	0.121	-	-	-
Thallium	mg/L	-	0.006	-	<0.006	-	-	-	<0.006	-	-	-
Tin	mg/L	-	0.002	-	<0.002	-	-	-	<0.002	-	-	-
Titanium	mg/L	-	0.002	-	0.003	-	-	-	<0.002	-	-	-
Tungsten	mg/L	-	0.01	-	<0.010	-	-	-	<0.010	-	-	-
Uranium	mg/L	0.02	0.002	-	<0.002	-	-	-	<0.002	-	-	-
Vanadium	mg/L	-	0.002	-	<0.002	-	-	-	<0.002	-	-	-
Zinc	mg/L	5	0.005	-	0.032	-	-	-	0.013	-	-	-
Zirconium	mg/L	-	0.004	-	<0.004	-	-	-	<0.004	-	-	-
% Difference/ Ion Balance	%	-	NA	-	1.57	-	-	-	2.07	-	-	-

Notes:
ODWS = Ontario Drinking Water Standards
RDL = Reportable Detection Limit
-' = No value available
Indicates exceedance of ODWS criteria
Samples 7607710-7607739 required dilution prior to analysis for Anions du

TOWN OF CALEDON
PLANNING
RECEIVED

Jul 12, 2021

				Well ID	TW5											
				Sample Date	04/07/2015	06/29/2015	09/17/2015	11/26/2015	03/08/2016	06/02/2016	09/15/2016	12/13/2016	03/10/2017	05/02/2017	06/05/2018	03/10/2020
				Lab sample ID	6430199	6701614	6988482	7237247	7430208	7607719	7853172	8091594	8245015	8358388	GWT329	L2426686-1
Sample Parameter	**Unit**	**ODWS Criteria**	**RDL**													
Electrical Conductivity	uS/cm		2		592	-	655	-	-	606	667	-	604	-	-	-
pH	pH Units	6.5 - 8.5	NA		7.90	-	8.12	-	-	8.10	8.08	-	8.12	-	-	-
Saturation pH					7.02	-	7.01	-	-	6.99	7.04	-	7.00	-	-	-
Langelier Index					0.88	-	1.11	-	-	1.11	1.04	-	1.12	-	-	-
Total Hardness (as CaCO3)	mg/L	80-100	0.5		285	-	301	-	-	298	280	-	288	-	-	-
Total Dissolved Solids	mg/L	500	20		302	-	368	-	-	326	358	-	306	-	-	368
Alkalinity (as CaCO3)	mg/L	30-500	5		244	-	234	-	-	251	237	-	249	-	-	-
Bicarbonate (as CaCO3)	mg/L	-	5		244	-	234	-	-	251	237	-	249	-	-	-
Carbonate (as CaCO3)	mg/L	-	5		<5	-	<5	-	-	<5	<5	-	<5	-	-	-
Hydroxide (as CaCO3)	mg/L	-	5		<5	-	<5	-	-	<5	<5	-	<5	-	-	-
Fluoride	mg/L	1.5	0.1		<0.05	-	<0.25	-	-	<0.10	<0.10	-	<0.05	-	-	-
Chloride	mg/L	250	0.2		19.80	-	37.90	-	-	24.3	41.20	-	20.20			-
Nitrate as N	mg/L	10	0.1		6.31	8.28	7.77	7.09	7.80	6.72	7.18	6.34	6.76	7.99	8.38	8.42
Nitrite as N	mg/L	1	0.1		<0.05	-	<0.25	-	-	<0.10	<0.10	-	<0.05	<0.05	<0.05	<0.01
Bromide	mg/L	-	0.1		<0.05	-	<0.25	-	-	<0.10	<0.10	-	<0.05	-	-	-
Sulphate	mg/L	500	0.2		14.5	-	22.8	-	-	16.8	20.1	-	14.1	-	-	16.5
Ortho Phosphate as P	mg/L	-	0.2		<0.10	-	<0.50	-	-	<0.20	<0.20	-	<0.10	-	-	-
Reactive Silica	mg/L	-	0.05		6.79	-	7.42	-	-	7.49	7.43	-	7.03	-	-	-
Ammonia as N	mg/L	-	0.02		<0.02	-	<0.02	-	-	<0.02	<0.02	-	<0.02	-	-	-
Total Phosphorus	mg/L	-	0.05		<0.05	-	<0.05	-	-	<0.05	<0.05	-	<0.05	-	-	-
Total Organic Carbon	mg/L	-	0.5		0.6	-	1.0	-	-	<0.5	0.6	-	0.7	-	-	-
Colour	TCU	5	5		<5	-	<5	-	-	<5	<5	-	<5	-	-	-
Turbidity	NTU	5	0.5		1.5	-	8.2	-	-	2.5	1.7	-	1.9	-	-	1.17
Calcium	mg/L	-	0.05		80.2	-	83.4	-	-	81.5	76.6	-	79.3	-	-	-
Magnesium	mg/L	-	0.05		20.5	-	22.6	-	-	23.0	21.6	-	21.9	-	-	-
Sodium	mg/L	200	0.05		7.24	-	15.80	-	-	9.66	16.00	-	8.93	-	-	-
Potassium	mg/L	-	0.05		1.02	-	1.13	-	-	0.91	0.90	-	0.91	-	-	-
Aluminum	mg/L	0.1	0.004		<0.004	-	<0.004	-	-	0.006	0.010	-	0.013	-	-	-
Antimony	mg/L	0.006	0.003		<0.003	-	<0.003	-	-	<0.003	<0.003	-	<0.003	-	-	-
Arsenic	mg/L	0.025	0.003		<0.003	-	<0.003	-	-	<0.003	<0.003	-	<0.003	-	-	-
Barium	mg/L	1	0.002		0.110	-	0.110	-	-	0.112	0.112	-	0.110	-	-	-
Beryllium	mg/L	-	0.001		<0.001	-	<0.001	-	-	<0.001	<0.001	-	<0.001	-	-	-
Boron	mg/L	5	0.01		0.011	-	<0.010	-	-	0.011	<0.010	-	<0.010	-	-	-
Cadmium	mg/L	0.005	0.001		<0.001	-	<0.001	-	-	<0.001	<0.001	-	<0.001	-	-	-
Chromium	mg/L	0.05	0.003		0.004	-	<0.003	-	-	<0.003	<0.003	-	<0.003	-	-	-
Cobalt	mg/L	-	0.001		<0.001	-	<0.001	-	-	<0.001	<0.001	-	<0.001	-	-	-
Copper	mg/L	1	0.003		<0.003	-	<0.003	-	-	<0.003	<0.003	-	<0.003	-	-	-
Iron	mg/L	0.3	0.01		<0.010	-	<0.010	-	-	<0.010	<0.010	-	<0.010	-	-	<0.05
Lead	mg/L	0.01	0.002		<0.002	-	<0.002	-	-	<0.002	<0.002	-	<0.002	-	-	-
Manganese	mg/L	0.05	0.002		<0.002	-	<0.002	-	-	<0.002	<0.002	-	<0.002	-	-	-
Mercury	mg/L	0.001	0.0001		<0.0001	-	<0.0001	-	-	<0.0001	<0.0001	-	<0.0001	-	-	-
Molybdenum	mg/L	-	0.002		<0.002	-	<0.002	-	-	<0.002	<0.002	-	<0.002	-	-	-
Nickel	mg/L	-	0.003		<0.003	-	0.004	-	-	<0.003	<0.003	-	<0.003	-	-	-
Selenium	mg/L	0.01	0.004		<0.004	-	<0.004	-	-	<0.004	<0.004	-	<0.004	-	-	-
Silver	mg/L	-	0.002		<0.002	-	<0.002	-	-	<0.002	<0.002	-	<0.002	-	-	-
Strontium	mg/L	-	0.005		0.154	-	0.184	-	-	0.153	0.155	-	0.162	-	-	-
Thallium	mg/L	-	0.006		<0.006	-	<0.006	-	-	<0.006	<0.006	-	<0.006	-	-	-
Tin	mg/L	-	0.002		<0.002	-	<0.002	-	-	<0.002	<0.002	-	<0.002	-	-	-
Titanium	mg/L	-	0.002		<0.002	-	<0.002	-	-	<0.002	<0.002	-	<0.002	-	-	-
Tungsten	mg/L	-	0.01		<0.010	-	<0.010	-	-	<0.010	<0.010	-	<0.010	-	-	-
Uranium	mg/L	0.02	0.002		<0.002	-	<0.002	-	-	<0.002	<0.002	-	<0.002	-	-	-
Vanadium	mg/L	-	0.002		<0.002	-	<0.002	-	-	<0.002	<0.002	-	<0.002	-	-	-
Zinc	mg/L	5	0.005		0.019	-	0.018	-	-	0.026	0.016	-	0.024	-	-	-
Zirconium	mg/L	-	0.004		<0.004	-	<0.004	-	-	<0.004	<0.004	-	<0.004	-	-	-
% Difference/ Ion Balance	%	-	NA		1.30	-	0.30	-	-	1.02	3.91	-	1.24	-	-	-

Notes:
ODWS = Ontario Drinking Water Standards
RDL = Reportable Detection Limit
-' = No value available
Indicates exceedance of ODWS criteria
Samples 7607710-7607739 required dilution prior to analysis for Anions du

TOWN OF CALEDON
PLANNING
RECEIVED

Jul 12, 2021

				Well ID	TW6								
				Sample Date	04/07/2015	06/29/2015	11/26/2015	04/01/2016	04/02/2016	03/10/2017	05/02/2017	06/05/2018	03/09/2020
				Lab sample ID	6430206	6701612	7237256	7471115	7471117	8245021	8358389	GWT327	L2425776-1
Sample Parameter	**Unit**	**ODWS Criteria**	**RDL**										
Electrical Conductivity	uS/cm		2		602	-	-	-	-	612	-	-	-
pH	pH Units	6.5 - 8.5	NA		8.14	-	-	-	-	8.10	-	-	-
Saturation pH					7.02	-	-	-	-	7.01	-	-	-
Langelier Index					1.12	-	-	-	-	1.09	-	-	-
Total Hardness (as CaCO3)	mg/L	80-100	0.5		283	-	-	-	-	288	-	-	-
Total Dissolved Solids	mg/L	500	20		314	-	-	-	-	308	-	-	389
Alkalinity (as CaCO3)	mg/L	30-500	5		245	-	-	-	-	245	-	-	-
Bicarbonate (as CaCO3)	mg/L	-	5		245	-	-	-	-	245	-	-	-
Carbonate (as CaCO3)	mg/L	-	5		<5	-	-	-	-	<5	-	-	-
Hydroxide (as CaCO3)	mg/L	-	5		<5	-	-	-	-	<5	-	-	-
Fluoride	mg/L	1.5	0.1		<0.05	-	-	-	-	<0.05	-	-	-
Chloride	mg/L	250	0.2		24.3	-	-	-	-	21.80	-	-	-
Nitrate as N	mg/L	10	0.1		7.80	8.20	7.30	7.89	8.23	8.52	9.08	8.58	7.56
Nitrite as N	mg/L	1	0.1		<0.05	-	-	-	-	<0.05	<0.10	<0.10	<0.01
Bromide	mg/L	-	0.1		<0.05	-	-	-	-	<0.05	-	-	-
Sulphate	mg/L	500	0.2		15.3	-	-	-	-	13.5	-	-	17.5
Ortho Phosphate as P	mg/L	-	0.2		<0.10	-	-	-	-	<0.10	-	-	-
Reactive Silica	mg/L	-	0.05		6.87	-	-	-	-	7.01	-	-	-
Ammonia as N	mg/L	-	0.02		<0.02	-	-	-	-	<0.02	-	-	-
Total Phosphorus	mg/L	-	0.05		<0.05	-	-	-	-	<0.05	-	-	-
Total Organic Carbon	mg/L	-	0.5		0.6	-	-	-	-	0.7	-	-	-
Colour	TCU	5	5		<5	-	-	-	-	<5	-	-	-
Turbidity	NTU	5	0.5		6.8	-	-	-	-	<0.5	-	-	0.34
Calcium	mg/L	-	0.05		79.7	-	-	-	-	79.9	-	-	-
Magnesium	mg/L	-	0.05		20.3	-	-	-	-	21.6	-	-	-
Sodium	mg/L	200	0.05		8.54	-	-	-	-	8.87	-	-	-
Potassium	mg/L	-	0.05		0.98	-	-	-	-	0.86	-	-	-
Aluminum	mg/L	0.1	0.004		<0.004	-	-	-	-	0.006	-	-	-
Antimony	mg/L	0.006	0.003		<0.003	-	-	-	-	<0.003	-	-	-
Arsenic	mg/L	0.025	0.003		<0.003	-	-	-	-	<0.003	-	-	-
Barium	mg/L	1	0.002		0.088	-	-	-	-	0.105	-	-	-
Beryllium	mg/L	-	0.001		<0.001	-	-	-	-	<0.001	-	-	-
Boron	mg/L	5	0.01		<0.010	-	-	-	-	<0.010	-	-	-
Cadmium	mg/L	0.005	0.001		<0.001	-	-	-	-	<0.001	-	-	-
Chromium	mg/L	0.05	0.003		0.008	-	-	-	-	<0.003	-	-	-
Cobalt	mg/L	-	0.001		<0.001	-	-	-	-	<0.001	-	-	-
Copper	mg/L	1	0.003		<0.003	-	-	-	-	<0.003	-	-	-
Iron	mg/L	0.3	0.01		<0.010	-	-	-	-	<0.010	-	-	<0.05
Lead	mg/L	0.01	0.002		<0.002	-	-	-	-	<0.002	-	-	-
Manganese	mg/L	0.05	0.002		<0.002	-	-	-	-	<0.002	-	-	-
Mercury	mg/L	0.001	0.0001		<0.0001	-	-	-	-	<0.0001	-	-	-
Molybdenum	mg/L	-	0.002		<0.002	-	-	-	-	<0.002	-	-	-
Nickel	mg/L	-	0.003		<0.003	-	-	-	-	<0.003	-	-	-
Selenium	mg/L	0.01	0.004		<0.004	-	-	-	-	<0.004	-	-	-
Silver	mg/L	-	0.002		<0.002	-	-	-	-	<0.002	-	-	-
Strontium	mg/L	-	0.005		0.139	-	-	-	-	0.156	-	-	-
Thallium	mg/L	-	0.006		<0.006	-	-	-	-	<0.006	-	-	-
Tin	mg/L	-	0.002		<0.002	-	-	-	-	<0.002	-	-	-
Titanium	mg/L	-	0.002		<0.002	-	-	-	-	<0.002	-	-	-
Tungsten	mg/L	-	0.01		<0.010	-	-	-	-	<0.010	-	-	-
Uranium	mg/L	0.02	0.002		<0.002	-	-	-	-	<0.002	-	-	-
Vanadium	mg/L	-	0.002		0.003	-	-	-	-	<0.002	-	-	-
Zinc	mg/L	5	0.005		0.014	-	-	-	-	0.017	-	-	-
Zirconium	mg/L	-	0.004		<0.004	-	-	-	-	<0.004	-	-	-
% Difference/ Ion Balance	%	-	NA		3.3	-	-	-	-	1.84	-	-	-

Notes:
ODWS = Ontario Drinking Water Standards
RDL = Reportable Detection Limit
-' = No value available
Indicates exceedance of ODWS criteria
Samples 7607710-7607739 required dilution prior to analysis for Anions du

TOWN OF CALEDON
PLANNING
RECEIVED

Jul 12, 2021

				Well ID	TW7									
				Sample Date	02/19/2016	02/19/2016	03/08/2016	06/02/2016	09/15/2016	12/13/2016	03/10/2017	05/02/2017	06/05/2018	03/09/2020
				Lab sample ID	7395659	7395664	7430212	7607713	7853182	8091592	8245027	8358390	GWT326	L2425776-2
Sample Parameter	**Unit**	**ODWS Criteria**	**RDL**											
Electrical Conductivity	uS/cm		2	587	-	-	585	606	-	592	-	-	-	
pH	pH Units	6.5 - 8.5	NA	7.88	-	-	8.07	8.14	-	8.11	-	-	-	
Saturation pH				6.99	-	-	6.96	7.01	-	6.98	-	-	-	
Langelier Index				0.89	-	-	1.11	1.13	-	1.13	-	-	-	
Total Hardness (as CaCO3)	mg/L	80-100	0.5	280	-	-	303	284	-	291	-	-	-	
Total Dissolved Solids	mg/L	500	20	354	-	-	326	334	-	306	-	-	345	
Alkalinity (as CaCO3)	mg/L	30-500	5	262	-	-	261	247	-	260	-	-	-	
Bicarbonate (as CaCO3)	mg/L	-	5	262	-	-	261	247	-	260	-	-	-	
Carbonate (as CaCO3)	mg/L	-	5	<5	-	-	<5	<5	-	<5	-	-	-	
Hydroxide (as CaCO3)	mg/L	-	5	<5	-	-	<5	<5	-	<5	-	-	-	
Fluoride	mg/L	1.5	0.1	<0.25	-	-	<0.10	<0.10	-	<0.05	-	-	-	
Chloride	mg/L	250	0.2	18.3	-	-	15.2	17.4	-	12.5	-	-	-	
Nitrate as N	mg/L	10	0.1	8.52	8.00	7.27	6.32	6.97	5.96	5.77	6.87	7.19	7.37	
Nitrite as N	mg/L	1	0.1	<0.25	-	-	<0.10	<0.10	-	<0.05	<0.05	<0.05	<0.01	
Bromide	mg/L	-	0.1	<0.25	-	-	<0.10	<0.10	-	<0.05	-	-	-	
Sulphate	mg/L	500	0.2	20.6	-	-	16.4	18.5	-	14.4	-	-	18	
Ortho Phosphate as P	mg/L	-	0.2	<0.50	-	-	<0.20	<0.20	-	<0.10	-	-	-	
Reactive Silica	mg/L	-	0.05	7.03	-	-	7.14	7.12	-	6.72	-	-	-	
Ammonia as N	mg/L	-	0.02	0.1	-	-	<0.02	<0.02	-	0.03	-	-	-	
Total Phosphorus	mg/L	-	0.05	<0.05	-	-	<0.05	<0.05	-	<0.05	-	-	-	
Total Organic Carbon	mg/L	-	0.5	0.6	-	-	0.5	1.0	-	0.6	-	-	-	
Colour	TCU	5	5	<5	-	-	<5	<5	-	<5	-	-	-	
Turbidity	NTU	5	0.5	3.9	-	-	3.7	4.8	-	1.8	-	-	1.97	
Calcium	mg/L	-	0.05	77.2	-	-	83.2	77.5	-	80.0	-	-	-	
Magnesium	mg/L	-	0.05	21.2	-	-	23.1	21.9	-	22.2	-	-	-	
Sodium	mg/L	200	0.05	5.60	-	-	5.15	6.44	-	4.86	-	-	-	
Potassium	mg/L	-	0.05	1.00	-	-	0.89	0.87	-	0.92	-	-	-	
Aluminum	mg/L	0.1	0.004	< 0.004	-	-	0.009	0.012	-	0.009	-	-	-	
Antimony	mg/L	0.006	0.003	<0.003	-	-	<0.003	<0.003	-	<0.003	-	-	-	
Arsenic	mg/L	0.025	0.003	<0.003	-	-	<0.003	<0.003	-	<0.003	-	-	-	
Barium	mg/L	1	0.002	0.093	-	-	0.101	0.099	-	0.109	-	-	-	
Beryllium	mg/L	-	0.001	<0.001	-	-	<0.001	<0.001	-	<0.001	-	-	-	
Boron	mg/L	5	0.01	<0.010	-	-	0.012	<0.010	-	0.010	-	-	-	
Cadmium	mg/L	0.005	0.001	<0.001	-	-	<0.001	<0.001	-	<0.001	-	-	-	
Chromium	mg/L	0.05	0.003	<0.003	-	-	<0.003	<0.003	-	<0.003	-	-	-	
Cobalt	mg/L	-	0.001	<0.001	-	-	<0.001	<0.001	-	<0.001	-	-	-	
Copper	mg/L	1	0.003	<0.003	-	-	<0.003	<0.003	-	<0.003	-	-	-	
Iron	mg/L	0.3	0.01	<0.010	-	-	<0.010	<0.010	-	<0.010	-	-	0.061	
Lead	mg/L	0.01	0.002	<0.002	-	-	<0.002	<0.002	-	<0.002	-	-	-	
Manganese	mg/L	0.05	0.002	<0.002	-	-	<0.002	<0.002	-	<0.002	-	-	-	
Mercury	mg/L	0.001	0.0001	<0.0001	-	-	<0.0001	<0.0001	-	<0.0001	-	-	-	
Molybdenum	mg/L	-	0.002	<0.002	-	-	<0.002	<0.002	-	<0.002	-	-	-	
Nickel	mg/L	-	0.003	<0.003	-	-	<0.003	<0.003	-	<0.003	-	-	-	
Selenium	mg/L	0.01	0.004	<0.004	-	-	<0.004	<0.004	-	<0.004	-	-	-	
Silver	mg/L	-	0.002	<0.002	-	-	<0.002	<0.002	-	<0.002	-	-	-	
Strontium	mg/L	-	0.005	0.106	-	-	0.132	0.124	-	0.136	-	-	-	
Thallium	mg/L	-	0.006	<0.006	-	-	<0.006	<0.006	-	<0.006	-	-	-	
Tin	mg/L	-	0.002	<0.002	-	-	<0.002	<0.002	-	<0.002	-	-	-	
Titanium	mg/L	-	0.002	<0.002	-	-	<0.002	<0.002	-	<0.002	-	-	-	
Tungsten	mg/L	-	0.01	<0.010	-	-	<0.010	<0.010	-	<0.010	-	-	-	
Uranium	mg/L	0.02	0.002	<0.002	-	-	<0.002	<0.002	-	<0.002	-	-	-	
Vanadium	mg/L	-	0.002	<0.002	-	-	<0.002	<0.002	-	<0.002	-	-	-	
Zinc	mg/L	5	0.005	0.017	-	-	0.035	0.020	-	0.029	-	-	-	
Zirconium	mg/L	-	0.004	<0.004	-	-	<0.004	<0.004	-	<0.004	-	-	-	
% Difference/ Ion Balance	%	-	NA	7.26	-	-	1.11	2.78	-	1.69	-	-	-	

Notes:
ODWS = Ontario Drinking Water Standards
RDL = Reportable Detection Limit
-' = No value available
Indicates exceedance of ODWS criteria
Samples 7607710-7607739 required dilution prior to analysis for Anions du

TOWN OF CALEDON
PLANNING
RECEIVED

Jul 12, 2021

				Well ID	TW8									
				Sample Date	02/23/2016	02/23/2016	03/07/2016	06/02/2016	09/15/2016	12/13/2016	03/10/2017	05/02/2017	06/05/2018	03/10/2020
				Lab sample ID	7401690	7401689	7426611	7607726	7853189	8091595	8245033	8358391	GWT325	L2426686-3
Sample Parameter	**Unit**	**ODWS Criteria**	**RDL**											
Electrical Conductivity	uS/cm		2	606	-	-	627	598	-	604	-	-	-	
pH	pH Units	6.5 - 8.5	NA	8.02	-	-	8.17	8.08	-	8.12	-	-	-	
Saturation pH				6.96	-	-	6.95	7.01	-	6.98	-	-	-	
Langelier Index				1.06	-	-	1.22	1.07	-	1.14	-	-	-	
Total Hardness (as CaCO3)	mg/L	80-100	0.5	315	-	-	324	296	-	301	-	-	-	
Total Dissolved Solids	mg/L	500	20	368	-	-	358	364	-	312	-	-	346	
Alkalinity (as CaCO3)	mg/L	30-500	5	254	-	-	251	238	-	251	-	-	-	
Bicarbonate (as CaCO3)	mg/L	-	5	254	-	-	251	238	-	251	-	-	-	
Carbonate (as CaCO3)	mg/L	-	5	<5	-	-	<5	<5	-	<5	-	-	-	
Hydroxide (as CaCO3)	mg/L	-	5	<5	-	-	<5	<5	-	<5	-	-	-	
Fluoride	mg/L	1.5	0.1	<0.25	-	-	<0.10	<0.10	-	<0.05	-	-	-	
Chloride	mg/L	250	0.2	10.4	-	-	11.0	9.46		9.54	-	-	-	
Nitrate as N	mg/L	10	0.1	8.25	7.93	7.76	5.35	7.85	7.41	6.68	5.15	4.36	5.05	
Nitrite as N	mg/L	1	0.1	<0.25	-	-	<0.10	<0.10	-	<0.05	<0.05	<0.05	<0.01	
Bromide	mg/L	-	0.1	<0.25	-	-	<0.10	<0.10	-	<0.05	-	-	-	
Sulphate	mg/L	500	0.2	49.1	-	-	58.0	43.5	-	31.1	-	-	32.9	
Ortho Phosphate as P	mg/L	-	0.2	<0.50	-	-	<0.20	<0.20	-	<0.10	-	-	-	
Reactive Silica	mg/L	-	0.05	7.60	-	-	7.75	7.49	-	7.18	-	-	-	
Ammonia as N	mg/L	-	0.02	<0.02	-	-	<0.02	<0.02	-	0.15	-	-	-	
Total Phosphorus	mg/L	-	0.05	<0.05	-	-	0.05	0.06	-	0.08	-	-	-	
Total Organic Carbon	mg/L	-	0.5	0.6	-	-	0.7	1.5	-	1.1	-	-	-	
Colour	TCU	5	5	<5	-	-	<5	<5	-	<5	-	-	-	
Turbidity	NTU	5	0.5	21.1	-	-	53.6	113	-	113	-	-	14.7	
Calcium	mg/L	-	0.05	85.6	-	-	88.3	80.6	-	81.6	-	-	-	
Magnesium	mg/L	-	0.05	24.7	-	-	25.1	22.9	-	23.6	-	-	-	
Sodium	mg/L	200	0.05	4.69	-	-	4.72	3.22	-	3.67	-	-	-	
Potassium	mg/L	-	0.05	1.30	-	-	1.34	1.17	-	1.12	-	-	-	
Aluminum	mg/L	0.1	0.004	<0.004	-	-	0.011	0.011	-	<0.004	-	-	-	
Antimony	mg/L	0.006	0.003	<0.003	-	-	<0.003	<0.003	-	<0.003	-	-	-	
Arsenic	mg/L	0.025	0.003	<0.003	-	-	<0.003	0.003	-	<0.003	-	-	-	
Barium	mg/L	1	0.002	0.110	-	-	0.087	0.085	-	0.099	-	-	-	
Beryllium	mg/L	-	0.001	<0.001	-	-	<0.001	<0.001	-	<0.001	-	-	-	
Boron	mg/L	5	0.01	0.013	-	-	0.025	0.022	-	0.011	-	-	-	
Cadmium	mg/L	0.005	0.001	<0.001	-	-	<0.001	<0.001	-	<0.001	-	-	-	
Chromium	mg/L	0.05	0.003	<0.003	-	-	<0.003	<0.003	-	<0.003	-	-	-	
Cobalt	mg/L	-	0.001	<0.001	-	-	<0.001	<0.001	-	<0.001	-	-	-	
Copper	mg/L	1	0.003	<0.003	-	-	<0.003	<0.003	-	<0.003	-	-	-	
Iron	mg/L	0.3	0.01	<0.010	-	-	<0.010	<0.010	-	<0.010	-	-	1.18	
Lead	mg/L	0.01	0.002	<0.002	-	-	<0.002	<0.002	-	<0.002	-	-	-	
Manganese	mg/L	0.05	0.002	0.007	-	-	0.005	0.005	-	0.002	-	-	-	
Mercury	mg/L	0.001	0.0001	<0.0001	-	-	<0.0001	<0.0001	-	<0.0001	-	-	-	
Molybdenum	mg/L	-	0.002	<0.002	-	-	<0.002	<0.002	-	<0.002	-	-	-	
Nickel	mg/L	-	0.003	<0.003	-	-	<0.003	<0.003	-	<0.003	-	-	-	
Selenium	mg/L	0.01	0.004	<0.004	-	-	<0.004	<0.004	-	<0.004	-	-	-	
Silver	mg/L	-	0.002	<0.002	-	-	<0.002	<0.002	-	<0.002	-	-	-	
Strontium	mg/L	-	0.005	0.44	-	-	1.42	1.66	-	0.55	-	-	-	
Thallium	mg/L	-	0.006	<0.006	-	-	<0.006	<0.006	-	<0.006	-	-	-	
Tin	mg/L	-	0.002	<0.002	-	-	<0.002	<0.002	-	<0.002	-	-	-	
Titanium	mg/L	-	0.002	<0.002	-	-	<0.002	<0.002	-	<0.002	-	-	-	
Tungsten	mg/L	-	0.01	<0.010	-	-	<0.010	<0.010	-	<0.010	-	-	-	
Uranium	mg/L	0.02	0.002	<0.002	-	-	<0.002	<0.002	-	<0.002	-	-	-	
Vanadium	mg/L	-	0.002	<0.002	-	-	<0.002	<0.002	-	<0.002	-	-	-	
Zinc	mg/L	5	0.005	0.016	-	-	0.023	0.024	-	0.017	-	-	-	
Zirconium	mg/L	-	0.004	<0.004	-	-	<0.004	<0.004	-	<0.004	-	-	-	
% Difference/ Ion Balance	%	-	NA	3.27	-	-	1.52	3.31	-	1.59	-	-	-	

Notes:
ODWS = Ontario Drinking Water Standards
RDL = Reportable Detection Limit
-' = No value available
Indicates exceedance of ODWS criteria
Samples 7607710-7607739 required dilution prior to analysis for Anions du

TOWN OF CALEDON
PLANNING
RECEIVED

Jul 12, 2021

				Well ID	TW9									TW10				
				Sample Date	02/26/2016	02/26/2016	03/08/2016	06/02/2016	09/15/2016	12/13/2016	03/10/2017	06/05/2018	03/09/2020	03/10/2017	02/25/2016	05/02/2017	06/05/2018	03/11/2020
				Lab sample ID	7410959	7410958	7430214	7607733	7853195	8091593	8245039	GWT322	L2425776-3	8245045	7408001	8358393	GWT320	L2426891-2
Sample Parameter	**Unit**	**ODWS Criteria**	**RDL**															
Electrical Conductivity	uS/cm		2	610	-	-	601	594	-	620.00	-	-	430	-	-	-	-	
pH	pH Units	6.5 - 8.5	NA	8.02	-	-	8.10	8.15	-	8.10	-	-	8.06	-	-	-	-	
Saturation pH				6.94	-	-	6.95	7.00	-	6.90	-	-	7.26	-	-	-	-	
Langelier Index				1.08	-	-	1.15	1.15	-	1.20	-	-	0.80	-	-	-	-	
Total Hardness (as CaCO3)	mg/L	80-100	0.5	310	-	-	314	289	-	310.00	-	-	202	-	-	-	-	
Total Dissolved Solids	mg/L	500	20	332	-	-	334	332	-	326.00	-	310	216	-	-	-	41	
Alkalinity (as CaCO3)	mg/L	30-500	5	265	-	-	257	249	-	294.00	-	-	182	-	-	-	-	
Bicarbonate (as CaCO3)	mg/L	-	5	265	-	-	257	249	-	294.00	-	-	182	-	-	-	-	
Carbonate (as CaCO3)	mg/L	-	5	<5	-	-	<5	<5	-	<5	-	-	<5	-	-	-	-	
Hydroxide (as CaCO3)	mg/L	-	5	<5	-	-	<5	<5	-	<5	-	-	<5	-	-	-	-	
Fluoride	mg/L	1.5	0.1	<0.05	-	-	<0.10	<0.05	-	<0.05	-	-	<0.05	-	-	-	-	
Chloride	mg/L	250	0.2	9.37	-	-	9.32	9.76	-	8.84	-	-	14.40	-	-	-	-	
Nitrate as N	mg/L	10	0.1	3.26	3.65	3.41	2.99	2.17	1.51	2.68	2.76	1.74	1.68	2.41	0.85	1.35	<0.02	
Nitrite as N	mg/L	1	0.1	<0.05	-	-	<0.10	<0.05	-	<0.05	<0.05	<0.01	<0.05	-	<0.05	<0.05	<0.01	
Bromide	mg/L	-	0.1	<0.05	-	-	<0.10	<0.05	-	<0.05	-	-	<0.05	-	-	-	-	
Sulphate	mg/L	500	0.2	50.0	-	-	50.5	45.3	-	50.10	-	19.1	14.3	-	-	-	<0.30	
Ortho Phosphate as P	mg/L	-	0.2	<0.10	-	-	<0.20	<0.10	-	<0.10	-	-	<0.10	-	-	-	-	
Reactive Silica	mg/L	-	0.05	8.72	-	-	8.60	8.77	-	8.42	-	-	4.56	-	-	-	-	
Ammonia as N	mg/L	-	0.02	<0.02	-	-	<0.02	<0.02	-	0.09	-	-	0.03	-	-	-	-	
Total Phosphorus	mg/L	-	0.05	<0.05	-	-	<0.05	<0.05	-	<0.05	-	-	0.06	-	-	-	-	
Total Organic Carbon	mg/L	-	0.5	0.6	-	-	0.6	0.9	-	0.80	-	-	2.1	-	-	-	-	
Colour	TCU	5	5	<5	-	-	<5	<5	-	<5	-	-	<5	-	-	-	-	
Turbidity	NTU	5	0.5	10.4	-	-	3.5	2.4	-	2.00	-	2.4	64.8	-	-	-	0.28	
Calcium	mg/L	-	0.05	82.4	-	-	82.5	76.2	-	81.50	-	-	54.3	-	-	-	-	
Magnesium	mg/L	-	0.05	25.4	-	-	26.2	23.9	-	25.80	-	-	16.2	-	-	-	-	
Sodium	mg/L	200	0.05	3.99	-	-	3.91	4.03	-	4.17	-	-	5.76	-	-	-	-	
Potassium	mg/L	-	0.05	1.19	-	-	0.98	0.89	-	0.99	-	-	1.21	-	-	-	-	
Aluminum	mg/L	0.1	0.004	<0.004	-	-	<0.004	0.01	-	0.01	-	-	0.014	-	-	-	-	
Antimony	mg/L	0.006	0.003	<0.003	-	-	<0.003	<0.003	-	<0.003	-	-	<0.003	-	-	-	-	
Arsenic	mg/L	0.025	0.003	<0.003	-	-	<0.003	<0.003	-	<0.003	-	-	<0.003	-	-	-	-	
Barium	mg/L	1	0.002	0.070	-	-	0.069	0.074	-	0.07	-	-	0.036	-	-	-	-	
Beryllium	mg/L	-	0.001	<0.001	-	-	<0.001	<0.001	-	<0.001	-	-	<0.001	-	-	-	-	
Boron	mg/L	5	0.01	0.014	-	-	0.013	0.010	-	0.01	-	-	<0.010	-	-	-	-	
Cadmium	mg/L	0.005	0.001	<0.001	-	-	<0.001	<0.001	-	<0.001	-	-	<0.001	-	-	-	-	
Chromium	mg/L	0.05	0.003	0.005	-	-	<0.003	<0.003	-	<0.003	-	-	<0.003	-	-	-	-	
Cobalt	mg/L	-	0.001	<0.001	-	-	<0.001	<0.001	-	<0.001	-	-	<0.001	-	-	-	-	
Copper	mg/L	1	0.003	<0.003	-	-	<0.003	<0.003	-	<0.003	-	-	<0.003	-	-	-	-	
Iron	mg/L	0.3	0.01	< 0.010	-	-	<0.010	<0.010	-	<0.010	-	0.112	<0.010	-	-	-	1.21	
Lead	mg/L	0.01	0.002	<0.002	-	-	<0.002	<0.002	-	<0.002	-	-	<0.002	-	-	-	-	
Manganese	mg/L	0.05	0.002	<0.002	-	-	<0.002	<0.002	-	<0.002	-	-	0.009	-	-	-	-	
Mercury	mg/L	0.001	0.0001	<0.0001	-	-	<0.0001	<0.0001	-	<0.0001	-	-	<0.0001	-	-	-	-	
Molybdenum	mg/L	-	0.002	<0.002	-	-	<0.002	<0.002	-	<0.002	-	-	<0.002	-	-	-	-	
Nickel	mg/L	-	0.003	<0.003	-	-	<0.003	<0.003	-	<0.003	-	-	<0.003	-	-	-	-	
Selenium	mg/L	0.01	0.004	<0.004	-	-	<0.004	<0.004	-	<0.004	-	-	<0.004	-	-	-	-	
Silver	mg/L	-	0.002	<0.002	-	-	<0.002	<0.002	-	<0.002	-	-	<0.002	-	-	-	-	
Strontium	mg/L	-	0.005	0.320	-	-	0.296	0.279	-	0.34	-	-	0.083	-	-	-	-	
Thallium	mg/L	-	0.006	<0.006	-	-	<0.006	<0.006	-	<0.006	-	-	<0.006	-	-	-	-	
Tin	mg/L	-	0.002	<0.002	-	-	<0.002	<0.002	-	<0.002	-	-	<0.002	-	-	-	-	
Titanium	mg/L	-	0.002	<0.002	-	-	<0.002	<0.002	-	<0.002	-	-	<0.002	-	-	-	-	
Tungsten	mg/L	-	0.01	<0.010	-	-	<0.010	<0.010	-	<0.010	-	-	<0.010	-	-	-	-	
Uranium	mg/L	0.02	0.002	<0.002	-	-	<0.002	<0.002	-	<0.002	-	-	<0.002	-	-	-	-	
Vanadium	mg/L	-	0.002	<0.002	-	-	<0.002	<0.002	-	<0.002	-	-	<0.002	-	-	-	-	
Zinc	mg/L	5	0.005	0.022	-	-	0.031	0.028	-	0.04	-	-	0.016	-	-	-	-	
Zirconium	mg/L	-	0.004	<0.004	-	-	<0.004	<0.004	-	<0.004	-	-	<0.004	-	-	-	-	
% Difference/ Ion Balance	%	-	NA	3.26	-	-	1.52	3.13	-	6.98	-	-	1.56	-	-	-	-	

Notes:
ODWS = Ontario Drinking Water Standards
RDL = Reportable Detection Limit
-' = No value available
Indicates exceedance of ODWS criteria
Samples 7607710-7607739 required dilution prior to analysis for Anions du

TOWN OF CALEDON
PLANNING
RECEIVED

Jul 12, 2021

				Well ID	TW11											
				Sample Date	02/29/2016	02/29/2016	03/30/2016	03/07/2016	03/31/2016	06/02/2016	09/15/2016	12/13/2016	03/10/2017	05/02/2017	06/05/2018	03/10/2020
				Lab sample ID	7413129	7413121	7471112	7426610	7471114	7607739	7853203	8091596	8245052	8358394	GWT324	L2426686-2
Sample Parameter	**Unit**	**ODWS Criteria**	**RDL**													
Electrical Conductivity	uS/cm		2	607	-	-	-	-	572	589	-	568	-	-	-
pH	pH Units	6.5 - 8.5	NA	8.00	-	-	-	-	8.08	8.20	-	8.16	-	-	-
Saturation pH				6.95	-	-	-	-	6.95	6.99	-	6.99	-	-	-
Langelier Index				1.05	-	-	-	-	1.13	1.21	-	1.17	-	-	-
Total Hardness (as CaCO3)	mg/L	80-100	0.5	303	-	-	-	-	289	286	-	278	-	-	-
Total Dissolved Solids	mg/L	500	20	326	-	-	-	-	300	314	-	286	-	-	314
Alkalinity (as CaCO3)	mg/L	30-500	5	267	-	-	-	-	262	258	-	249	-	-	-
Bicarbonate (as CaCO3)	mg/L	-	5	267	-	-	-	-	262	258	-	249	-	-	-
Carbonate (as CaCO3)	mg/L	-	5	<5	-	-	-	-	<5	<5	-	<5	-	-	-
Hydroxide (as CaCO3)	mg/L	-	5	<5	-	-	-	-	<5	<5	-	<5	-	-	-
Fluoride	mg/L	1.5	0.1	<0.10	-	-	-	-	<0.10	<0.05	-	<0.05	-	-	-
Chloride	mg/L	250	0.2	12.8	-	-	-	-	18.4	12.7	-	13.9	-	-	-
Nitrate as N	mg/L	10	0.1	4.58	4.61	3.46	5.03	3.37	3.00	4.08	3.58	3.94	3.00	2.21	2.72
Nitrite as N	mg/L	1	0.1	<0.10	-	-	-	-	<0.10	<0.05	-	<0.05	<0.05	<0.05	<0.01
Bromide	mg/L	-	0.1	<0.10	-	-	-	-	<0.10	<0.05	-	<0.05	-	-	-
Sulphate	mg/L	500	0.2	21.3	-	-	-	-	17.3	21.3	-	19.1	-	-	15.2
Ortho Phosphate as P	mg/L	-	0.2	<0.20	-	-	-	-	<0.20	<0.10	-	<0.10	-	-	-
Reactive Silica	mg/L	-	0.05	8.05	-	-	-	-	7.67	7.88	-	7.19	-	-	-
Ammonia as N	mg/L	-	0.02	<0.02	-	-	-	-	<0.02	<0.02	-	<0.02	-	-	-
Total Phosphorus	mg/L	-	0.05	<0.05	-	-	-	-	<0.05	<0.05	-	<0.05	-	-	-
Total Organic Carbon	mg/L	-	0.5	0.7	-	-	-	-	1.1	0.8	-	1.6	-	-	-
Colour	TCU	5	5	<5	-	-	-	-	<5	<5	-	<5	-	-	-
Turbidity	NTU	5	0.5	2.9	-	-	-	-	10.2	4.9	-	7.4	-	-	5.13
Calcium	mg/L	-	0.05	81.7	-	-	-	-	78.3	77.5	-	75.0	-	-	-
Magnesium	mg/L	-	0.05	24.0	-	-	-	-	22.8	22.4	-	22.0	-	-	-
Sodium	mg/L	200	0.05	5.39	-	-	-	-	7.26	5.49	-	5.82	-	-	-
Potassium	mg/L	-	0.05	1.01	-	-	-	-	0.99	0.97	-	0.98	-	-	-
Aluminum	mg/L	0.1	0.004	<0.004	-	-	-	-	<0.004	0.013	-	0.011	-	-	-
Antimony	mg/L	0.006	0.003	<0.003	-	-	-	-	<0.003	<0.003	-	<0.003	-	-	-
Arsenic	mg/L	0.025	0.003	<0.003	-	-	-	-	<0.003	<0.003	-	<0.003	-	-	-
Barium	mg/L	1	0.002	0.060	-	-	-	-	0.056	0.059	-	0.061	-	-	-
Beryllium	mg/L	-	0.001	<0.001	-	-	-	-	<0.001	<0.001	-	<0.001	-	-	-
Boron	mg/L	5	0.01	<0.010	-	-	-	-	0.010	<0.010	-	0.010	-	-	-
Cadmium	mg/L	0.005	0.001	<0.001	-	-	-	-	<0.001	<0.001	-	<0.001	-	-	-
Chromium	mg/L	0.05	0.003	< 0.003	-	-	-	-	<0.003	<0.003	-	<0.003	-	-	-
Cobalt	mg/L	-	0.001	<0.001	-	-	-	-	<0.001	<0.001	-	<0.001	-	-	-
Copper	mg/L	1	0.003	<0.003	-	-	-	-	<0.003	<0.003	-	<0.003	-	-	-
Iron	mg/L	0.3	0.01	< 0.010	-	-	-	-	<0.010	<0.010	-	<0.010	-	-	1.61
Lead	mg/L	0.01	0.002	<0.002	-	-	-	-	<0.002	<0.002	-	<0.002	-	-	-
Manganese	mg/L	0.05	0.002	<0.002	-	-	-	-	<0.002	<0.002	-	<0.002	-	-	-
Mercury	mg/L	0.001	0.0001	<0.0001	-	-	-	-	<0.0001	<0.0001	-	<0.0001	-	-	-
Molybdenum	mg/L	-	0.002	<0.002	-	-	-	-	<0.002	<0.002	-	<0.002	-	-	-
Nickel	mg/L	-	0.003	<0.003	-	-	-	-	<0.003	<0.003	-	<0.003	-	-	-
Selenium	mg/L	0.01	0.004	<0.004	-	-	-	-	<0.004	<0.004	-	<0.004	-	-	-
Silver	mg/L	-	0.002	<0.002	-	-	-	-	<0.002	<0.002	-	<0.002	-	-	-
Strontium	mg/L	-	0.005	0.132	-	-	-	-	0.123	0.128	-	0.129	-	-	-
Thallium	mg/L	-	0.006	<0.006	-	-	-	-	<0.006	<0.006	-	<0.006	-	-	-
Tin	mg/L	-	0.002	<0.002	-	-	-	-	<0.002	<0.002	-	<0.002	-	-	-
Titanium	mg/L	-	0.002	<0.002	-	-	-	-	<0.002	<0.002	-	<0.002	-	-	-
Tungsten	mg/L	-	0.01	<0.010	-	-	-	-	<0.010	<0.010	-	<0.010	-	-	-
Uranium	mg/L	0.02	0.002	<0.002	-	-	-	-	<0.002	<0.002	-	<0.002	-	-	-
Vanadium	mg/L	-	0.002	<0.002	-	-	-	-	<0.002	<0.002	-	<0.002	-	-	-
Zinc	mg/L	5	0.005	0.013	-	-	-	-	0.024	0.016	-	0.015	-	-	-
Zirconium	mg/L	-	0.004	<0.004	-	-	-	-	<0.004	<0.004	-	<0.004	-	-	-
% Difference/ Ion Balance	%	-	NA	1.24	-	-	-	-	1.67	2.28	-	1.85	-	-	-

Notes:
ODWS = Ontario Drinking Water Standards
RDL = Reportable Detection Limit
-' = No value available
Indicates exceedance of ODWS criteria
Samples 7607710-7607739 required dilution prior to analysis for Anions du

TOWN OF CALEDON
PLANNING
RECEIVED

Jul 12, 2021

				Well ID	TW12				
				Sample Date	03/01/2016	03/01/2016	03/10/2017	05/02/2017	06/05/2018	03/08/2020
				Lab sample ID	7417874	7417866	8245058	8358397	8358397	L2425657-4
Sample Parameter	**Unit**	**ODWS Criteria**	**RDL**							
Electrical Conductivity	uS/cm		2	1740	-	1730	-	-	-
pH	pH Units	6.5 - 8.5	NA	7.92	-	7.95	-	-	-
Saturation pH				6.6	-	6.61	-	-	-
Langelier Index				1.32	-	1.34	-	-	-
Total Hardness (as CaCO3)	mg/L	80-100	0.5	1010	-	1020	-	-	-
Total Dissolved Solids	mg/L	500	20	1480	-	1400	-	-	1670
Alkalinity (as CaCO3)	mg/L	30-500	5	195	-	192	-	-	-
Bicarbonate (as CaCO3)	mg/L	-	5	195	-	192	-	-	-
Carbonate (as CaCO3)	mg/L	-	5	<5	-	<5	-	-	-
Hydroxide (as CaCO3)	mg/L	-	5	<5	-	<5	-	-	-
Fluoride	mg/L	1.5	0.1	<0.25	-	<0.25	-	-	-
Chloride	mg/L	250	0.2	2.3	-	2.11	-	-	-
Nitrate as N	mg/L	10	0.1	<0.25	<0.25	<0.25	<0.10	<0.10	<0.10
Nitrite as N	mg/L	1	0.1	<0.25	-	<0.25	<0.10	<0.10	<0.05
Bromide	mg/L	-	0.1	<0.25	-	<0.25	-	-	-
Sulphate	mg/L	500	0.2	875	-	896	-	-	991
Ortho Phosphate as P	mg/L	-	0.2	<0.50	-	<0.50	-	-	-
Reactive Silica	mg/L	-	0.05	14.2	-	13.1	-	-	-
Ammonia as N	mg/L	-	0.02	0.08	-	<0.02	-	-	-
Total Phosphorus	mg/L	-	0.05	<0.05	-	<0.05	-	-	-
Total Organic Carbon	mg/L	-	0.5	<0.5	-	0.6	-	-	-
Colour	TCU	5	5	<5	-	<5	-	-	-
Turbidity	NTU	5	0.5	5	-	8.6	-	-	13.8
Calcium	mg/L	-	0.05	320	-	318	-	-	-
Magnesium	mg/L	-	0.05	51.6	-	54.3	-	-	-
Sodium	mg/L	200	0.05	7.51	-	8.43	-	-	-
Potassium	mg/L	-	0.05	1.91	-	1.95	-	-	-
Aluminum	mg/L	0.1	0.004	<0.004	-	0.008	-	-	-
Antimony	mg/L	0.006	0.003	<0.003	-	<0.003	-	-	-
Arsenic	mg/L	0.025	0.003	0.013	-	0.013	-	-	-
Barium	mg/L	1	0.002	0.005	-	0.012	-	-	-
Beryllium	mg/L	-	0.001	<0.001	-	<0.001	-	-	-
Boron	mg/L	5	0.01	0.055	-	0.058	-	-	-
Cadmium	mg/L	0.005	0.001	<0.001	-	<0.001	-	-	-
Chromium	mg/L	0.05	0.003	<0.003	-	<0.003	-	-	-
Cobalt	mg/L	-	0.001	<0.001	-	<0.001	-	-	-
Copper	mg/L	1	0.003	<0.003	-	<0.003	-	-	-
Iron	mg/L	0.3	0.01	0.401	-	0.665	-	-	2.26
Lead	mg/L	0.01	0.002	<0.002	-	<0.002	-	-	-
Manganese	mg/L	0.05	0.002	0.026	-	0.030	-	-	-
Mercury	mg/L	0.001	0.0001	<0.0001	-	<0.0001	-	-	-
Molybdenum	mg/L	-	0.002	0.004	-	0.005	-	-	-
Nickel	mg/L	-	0.003	<0.003	-	<0.003	-	-	-
Selenium	mg/L	0.01	0.004	<0.004	-	<0.004	-	-	-
Silver	mg/L	-	0.002	<0.002	-	<0.002	-	-	-
Strontium	mg/L	-	0.005	3.52	-	3.86	-	-	-
Thallium	mg/L	-	0.006	<0.006	-	<0.006	-	-	-
Tin	mg/L	-	0.002	<0.002	-	<0.002	-	-	-
Titanium	mg/L	-	0.002	0.012	-	0.013	-	-	-
Tungsten	mg/L	-	0.01	<0.010	-	<0.010	-	-	-
Uranium	mg/L	0.02	0.002	<0.002	-	<0.002	-	-	-
Vanadium	mg/L	-	0.002	<0.002	-	<0.002	-	-	-
Zinc	mg/L	5	0.005	0.036	-	0.046	-	-	-
Zirconium	mg/L	-	0.004	<0.004	-	<0.004	-	-	-
% Difference/ Ion Balance	%	-	NA	3.66	-	4.11	-	-	-

Notes:
ODWS = Ontario Drinking Water Standards
RDL = Reportable Detection Limit
-' = No value available
Indicates exceedance of ODWS criteria
Samples 7607710-7607739 required dilution prior to analysis for Anions du

TOWN OF CALEDON
PLANNING
RECEIVED
Jul 12, 2021

				Well ID	TW1	TW2	TW3	TW4	TW5	TW6	TW7	TW8	TW9	TW10	TW11	TW12
				Sample Date	03/08/2020	03/08/2020	03/08/2020	03/08/2020	03/08/2020	03/08/2020	03/08/2020	03/08/2020	03/08/2020	03/08/2020	03/08/2020	03/08/2020
				Lab sample ID	L2425657-1	L2425657-2	L2425657-2	L2425657-2	L2425657-2	L2425657-2	L2425657-2	L2425657-2	L2425657-2	L2425657-2	L2425657-2	L2425657-3
Sample Parameter	**Unit**	**ODWS Criteria**	**RDL**													
E. Coli	CFU/100 mL	0	0	0	0	0	0	0	0	0	0	0	0	0	0	0
Heterotrophic Plate Count	CFU/mL	-	0	3	2130	21	5	6	2	4	13	9	18	3	3
Total Coliform Background	CFU/100 mL	-	0	20	31000	9	14	34	4	30	38	23	6	1	4
Total Coliforms	CFU/100 mL	0	0	0	66000	0	0	38	0	0	7	17	1	0	0
Benzo(a)pyrene	ug/L	0.01	0.005	<0.005	-	<0.005	-	-	<0.005	-	<0.005	-	-	-	-
alpha-Chlordane	ug/L	-	0.1	<0.1	-	<0.1	-	-	<0.1	-	<0.1	-	-	-	-
gamma-Chlordane	ug/L	-	0.1	<0.1	-	<0.1	-	-	<0.1	-	<0.1	-	-	-	-
p,p-DDD	ug/L	-	0.1	<0.1	-	<0.1	-	-	<0.1	-	<0.1	-	-	-	-
p,p-DDE	ug/L	-	0.1	<0.1	-	<0.1	-	-	<0.1	-	<0.1	-	-	-	-
o,p-DDT	ug/L	-	0.1	<0.1	-	<0.1	-	-	<0.1	-	<0.1	-	-	-	-
p,p-DDT	ug/L	-	0.1	<0.1	-	<0.1	-	-	<0.1	-	<0.1	-	-	-	-
Oxychlordane	ug/L	-	0.1	<0.1	-	<0.1	-	-	<0.1	-	<0.1	-	-	-	-
Bromoxynil	ug/L	5	0.2	<0.2	-	<0.2	-	-	<0.2	-	<0.2	-	-	-	-
2,4-D	ug/L	100	0.2	<0.2	-	<0.2	-	-	<0.2	-	<0.2	-	-	-	-
Dicamba	ug/L	120	0.2	<0.2	-	<0.2	-	-	<0.2	-	<0.2	-	-	-	-
Glyphosate	ug/L	280	5	<5	-	<5	-	-	<5	-	<5	-	-	-	-
MCPA	ug/L	100	0.2	<0.2	-	<0.2	-	-	<0.2	-	<0.2	-	-	-	-
Picloram	ug/L	190	0.2	<0.2	-	<0.2	-	-	<0.2	-	<0.2	-	-	-	-
Alachlor	ug/L	5	0.1	<0.1	-	<0.1	-	-	<0.1	-	<0.1	-	-	-	-
Atrazine	ug/L	-	0.1	<0.1	-	<0.1	-	-	<0.1	-	<0.1	-	-	-	-
Atrazine & Metabolites	ug/L	5	0.2	<0.2	-	<0.2	-	-	<0.2	-	<0.2	-	-	-	-
Azinphos-methyl	ug/L	20	0.1	<0.1	-	<0.1	-	-	<0.1	-	<0.1	-	-	-	-
Carbaryl	ug/L	90	0.2	<0.2	-	<0.2	-	-	<0.2	-	<0.2	-	-	-	-
Carbofuran	ug/L	90	0.2	<0.2	-	<0.2	-	-	<0.2	-	<0.2	-	-	-	-
Chlorpyrifos	ug/L	90	0.1	<0.1	-	<0.1	-	-	<0.1	-	<0.1	-	-	-	-
Diazinon	ug/L	20	0.1	<0.1	-	<0.1	-	-	<0.1	-	<0.1	-	-	-	-
Dimethoate	ug/L	20	0.1	<0.1	-	<0.1	-	-	<0.1	-	<0.1	-	-	-	-
Diquat	ug/L	70	1	<1	-	<1	-	-	<1	-	<1	-	-	-	-
Atrazine Desethyl	ug/L	-	0.1	<0.1	-	<0.1	-	-	<0.1	-	<0.1	-	-	-	-
Malathion	ug/L	190	0.1	<0.1	-	<0.1	-	-	<0.1	-	<0.1	-	-	-	-
Diclofop-methyl	ug/L	9	0.2	<0.2	-	<0.2	-	-	<0.2	-	<0.2	-	-	-	-
Metolachlor	ug/L	50	0.1	<0.1	-	<0.1	-	-	<0.1	-	<0.1	-	-	-	-
Metribuzin	ug/L	80	0.1	<0.1	-	<0.1	-	-	<0.1	-	<0.1	-	-	-	-
Paraquat	ug/L	10	1	<1	-	<1	-	-	<1	-	<1	-	-	-	-
Phorate	ug/L	2	0.1	<0.1	-	<0.1	-	-	<0.1	-	<0.1	-	-	-	-
Prometryne	ug/L	1	0.1	<0.1	-	<0.1	-	-	<0.1	-	<0.1	-	-	-	-
Simazine	ug/L	10	0.1	<0.1	-	<0.1	-	-	<0.1	-	<0.1	-	-	-	-
Terbufos	ug/L	1	0.2	<0.2	-	<0.2	-	-	<0.2	-	<0.2	-	-	-	-
Triallate	ug/L	230	0.1	<0.1	-	<0.1	-	-	<0.1	-	<0.1	-	-	-	-
Trifluralin	ug/L	45	0.1	<0.1	-	<0.1	-	-	<0.1	-	<0.1	-	-	-	-

Notes:
ODWS = Ontario Drinking Water Standards
RDL = Reportable Detection Limit
-' = No value available
Indicates exceedance of ODWS criteria

TOWN OF CALEDON
PLANNING
RECEIVED

Jul 12, 2021

APPENDIX G

Certificates of Analysis

TOWN OF CALEDON
PLANNING
RECEIVED
Jul 12, 2021

AGAT Laboratories

5835 COOPERS AVENUE
MISSISSAUGA, ONTARIO
CANADA L4Z 1Y2
TEL (905)712-5100
FAX (905)712-5122
http://www.agatlabs.com

CLIENT NAME: R.J. BURNSIDE & ASSOCIATES LTD
292 Speedvale Avenue West, Unit 7
Guelph, ON N1H1C4
(519) 823-4995

ATTENTION TO: Dwight Smikle

PROJECT: 300033273

AGAT WORK ORDER: 14W924797

WATER ANALYSIS REVIEWED BY: Mike Muneswar, BSc (Chem), Senior Inorganic Analyst

DATE REPORTED: Dec 08, 2014

PAGES (INCLUDING COVER): 4

VERSION*: 1

Should you require any information regarding this analysis please contact your client services representative at (905) 712-5100

*NOTES

All samples will be disposed of within 30 days following analysis. Please contact the lab if you require additional sample storage time.

Member of: Association of Professional Engineers, Geologists and Geophysicists of Alberta (APEGGA)
Western Enviro-Agricultural Laboratory Association (WEALA)
Environmental Services Association of Alberta (ESAA)

AGAT Laboratories is accredited to ISO/IEC 17025 by the Canadian Association for Laboratory Accreditation Inc. (CALA) and/or Standards Council of Canada (SCC) for specific tests listed on the scope of accreditation. AGAT Laboratories (Mississauga) is also accredited by the Canadian Association for Laboratory Accreditation Inc. (CALA) for specific drinking water tests. Accreditations are location and parameter specific. A complete listing of parameters for each location is available from www.cala.ca and/or www.scc.ca. The tests in this report may not necessarily be included in the scope of accreditation.

Results relate only to the items tested and to all the items tested

TOWN OF CALEDON
PLANNING
RECEIVED

Jul 12, 2021

AGAT Laboratories

5835 COOPERS AVENUE
MISSISSAUGA, ONTARIO
CANADA L4Z 1Y2
TEL (905)712-5100
FAX (905)712-5122
http://www.agatlabs.com

Certificate of Analysis

AGAT WORK ORDER: 14W924797

PROJECT: 300033273

CLIENT NAME: R.J. BURNSIDE & ASSOCIATES LTD

ATTENTION TO: Dwight Smikle

SAMPLING SITE:

SAMPLED BY:Sean Quinlan

Nitrate (Water)

DATE RECEIVED: 2014-12-05

DATE REPORTED: 2014-12-08

		SAMPLE DESCRIPTION:		PW2	OW1
		SAMPLE TYPE:		Water	Water
		DATE SAMPLED:		12/4/2014	12/4/2014
Parameter	Unit	G / S	RDL	6152997	6153004
Nitrate as N	mg/L		0.05	6.51	0.89

Comments: RDL - Reported Detection Limit; G / S - Guideline / Standard

Certified By:

Results relate only to the items tested and to all the items tested

TOWN OF CALEDON
PLANNING
RECEIVED
Jul 12, 2021

AGAT Laboratories
5835 COOPERS AVENUE
MISSISSAUGA, ONTARIO
CANADA L4Z 1Y2
TEL (905)712-5100
FAX (905)712-5122
http://www.agatlabs.com

Quality Assurance

CLIENT NAME: R.J. BURNSIDE & ASSOCIATES LTD

AGAT WORK ORDER: 14W924797

PROJECT: 300033273

ATTENTION TO: Dwight Smikle

SAMPLING SITE:

SAMPLED BY:Sean Quinlan

Water Analysis

RPT Date: Dec 08, 2014			DUPLICATE				REFERENCE MATERIAL			METHOD BLANK SPIKE			MATRIX SPIKE		
PARAMETER	Batch	Sample Id	Dup #1	Dup #2	RPD	Method Blank	Measured Value	Acceptable Limits		Recovery	Acceptable Limits		Recovery	Acceptable Limits	
								Lower	Upper		Lower	Upper		Lower	Upper
Nitrate (Water)															
Nitrate as N	6150673		<0.5	<0.5	0.0%	< 0.05	95%	90%	110%	99%	90%	110%	104%	80%	120%

Certified By:

AGAT Laboratories is accredited to ISO/IEC 17025 by the Canadian Association for Laboratory Accreditation Inc. (CALA) and/or Standards Council of Canada (SCC) for specific tests listed on the scope of accreditation. AGAT Laboratories (Mississauga) is also accredited by the Canadian Association for Laboratory Accreditation Inc. (CALA) for specific drinking water tests. Accreditations are location and parameter specific. A complete listing of parameters for each location is available from www.cala.ca and/or www.scc.ca. The tests in this report may not necessarily be included in the scope of accreditation.

Results relate only to the items tested and to all the items tested

TOWN OF CALEDON
PLANNING
RECEIVED
Jul 12, 2021

AGAT Laboratories
5835 COOPERS AVENUE
MISSISSAUGA, ONTARIO
CANADA L4Z 1Y2
TEL (905)712-5100
FAX (905)712-5122
http://www.agatlabs.com

Method Summary

CLIENT NAME: R.J. BURNSIDE & ASSOCIATES LTD

AGAT WORK ORDER: 14W924797

PROJECT: 300033273

ATTENTION TO: Dwight Smikle

SAMPLING SITE:

SAMPLED BY:Sean Quinlan

PARAMETER	AGAT S.O.P	LITERATURE REFERENCE	ANALYTICAL TECHNIQUE
Water Analysis			
Nitrate as N	INOR-93-6004	SM 4110 B	ION CHROMATOGRAPH

Results relate only to the items tested and to all the items tested

2.0,2.1,2.2

AGAT Laboratories

5835 Coopers Avenue
Mississauga, ON
L4Z 1Y2
www.agatlabs.com · webearth.agatlabs.com
P: 905.712.5100 · F: 905.712.5122

Chain of Custody Record

Laboratory Use Only
Arrival Temperature: 3.1/23/2.9
AGAT WO #: 14W924797
Lab Temperature:
Notes:

Client Information

Company: BURNSIDE
Contact: DWIGHT SMIKLE
Address: 292 Speedvale Ave Guelph, ON
Phone: 823-4995 Fax: 836-5477
Project: 300033273 PO:
AGAT Quotation #:

Please note, if quotation number is not provided, client will be billed full price for analysis.

Regulatory Requirements

☐ Regulation 153/04 (reg. 511 Amend.)
Table ____ (Indicate one)
☐ Ind/Com
☐ Res/Park
☐ Agriculture
Soil Texture (check one) ☐ Coarse ☐ Fine

☐ Sewer Use
Region ____ (Indicate one)
☐ Sanitary
☐ Storm

☐ Regulation 558
☐ CCME
☐ Other (specify)
☐ Prov. Water Quality Objectives (PWQO)
☐ None

Turnaround Time Required (TAT) Required*

Regular TAT
☐ 5 to 7 Working Days
Rush TAT (please provide prior notification)
Rush Surcharges Apply
☐ 3 Working Days
☐ 2 Working Days
☒ 1 Working Day
OR
Date Required (Rush surcharges may apply): Morning of Dec 8th
*TAT is exclusive of weekends and statutory holidays

Invoice To

Same: Yes ☑ No ☐
Company:
Contact:
Address:

Is this a drinking water sample? (potable water intended for human consumption) ☐ Yes ☒ No
If "Yes", please use the *Drinking Water Chain of Custody Form*

Is this submission for a **Record of Site Condition?** ☐ Yes ☒ No

Legend Matrix

GW Ground Water **O** Oil
SW Surface Water **P** Paint
SD Sediment **S** Soil

Report Information – reports to be sent to:

1. Name: Dwight Smikle
   Email: Dwight.Smikle@erjburnside.com
2. Name:
   Email:

Sample Identification	Date Sampled	Time Sampled	Sample Matrix	# of Containers	Comments Site/Sample Information	Metals and Inorganics	Metal Scan	Hydride Forming Metals	Client Custom Metals	ORPs: ☐ B-HWS ☐ Cl- ☐ CN- ☐ EC ☐ FOC ☐ Cr+6- ☐ SAR ☐ Hg ☐ pH ☐ NO_3/NO_2 ☐ N- Total	Nutrients: ☐ TP ☐ NH_3 ☐ TKN ☐ NO_3 ☐ NO_2 ☐ NO_3/NO_2	VOC: ☐ VOC ☐ THM ☐ BTEX	CCME Fractions 1 to 4	ABNs	PAHs	Chlorophenols	PCBs	Organochlorine Pesticides	TCLP Metals/Inorganics	Sewer Use	Nitrate
FW2	4 Dec 14	10:45	GW	1																✓
OW1	4 Dec 14	11:15	GW	1																✓

Samples Relinquished By (Print Name and Sign): SEAN QUINLAN — Date/Time: 4 DEC 14
Samples Relinquished By (Print Name and Sign): — Date/Time:
Samples Received By (Print Name and Sign): Ranji Singh — Date/Time: 4 Dec 14
Samples Received By (Print Name and Sign): N. Beswick — Date/Time: Dec 5

Pink Copy - Client
Yellow Copy - AGAT
White Copy - AGAT

Page 1 of 1
N°: 46237

Document ID: DW-TS-1511.008
Date Issued: May 31, 2013

TOWN OF CALEDON PLANNING RECEIVED Jul 8 2015

TOWN OF CALEDON
PLANNING
RECEIVED
Jul 12, 2021

AGAT Laboratories

5835 COOPERS AVENUE
MISSISSAUGA, ONTARIO
CANADA L4Z 1Y2
TEL (905)712-5100
FAX (905)712-5122
http://www.agatlabs.com

CLIENT NAME: R.J. BURNSIDE & ASSOCIATES LTD
292 Speedvale Avenue West, Unit 7
Guelph, ON N1H1C4
(519) 823-4995

ATTENTION TO: Dwight Smikle

PROJECT: 300033273

AGAT WORK ORDER: 15T047356

WATER ANALYSIS REVIEWED BY: Amanjot Bhela, Inorganic Coordinator

DATE REPORTED: Dec 04, 2015

PAGES (INCLUDING COVER): 5

VERSION*: 1

Should you require any information regarding this analysis please contact your client services representative at (905) 712-5100

*NOTES

All samples will be disposed of within 30 days following analysis. Please contact the lab if you require additional sample storage time.

Member of: Association of Professional Engineers, Geologists and Geophysicists of Alberta (APEGGA)
Western Enviro-Agricultural Laboratory Association (WEALA)
Environmental Services Association of Alberta (ESAA)

AGAT Laboratories is accredited to ISO/IEC 17025 by the Canadian Association for Laboratory Accreditation Inc. (CALA) and/or Standards Council of Canada (SCC) for specific tests listed on the scope of accreditation. AGAT Laboratories (Mississauga) is also accredited by the Canadian Association for Laboratory Accreditation Inc. (CALA) for specific drinking water tests. Accreditations are location and parameter specific. A complete listing of parameters for each location is available from www.cala.ca and/or www.scc.ca. The tests in this report may not necessarily be included in the scope of accreditation.

Results relate only to the items tested and to all the items tested
All reportable information as specified by ISO 17025:2005 is available from AGAT Laboratories upon request

TOWN OF CALEDON
PLANNING
RECEIVED

Jul 12, 2021

AGAT Laboratories

5835 COOPERS AVENUE
MISSISSAUGA, ONTARIO
CANADA L4Z 1Y2
TEL (905)712-5100
FAX (905)712-5122
http://www.agatlabs.com

Certificate of Analysis

AGAT WORK ORDER: 15T047356

PROJECT: 300033273

CLIENT NAME: R.J. BURNSIDE & ASSOCIATES LTD

ATTENTION TO: Dwight Smikle

SAMPLING SITE:

SAMPLED BY:MV

Nitrate/Nitrite (Water)

DATE RECEIVED: 2015-11-27

DATE REPORTED: 2015-12-04

		SAMPLE DESCRIPTION:		TW5	TW6	PW2	TW2
		SAMPLE TYPE:		Water	Water	Water	Water
		DATE SAMPLED:		11/26/2015	11/26/2015	11/26/2015	11/26/2015
Parameter	Unit	G / S	RDL	7237247	7237256	7237257	7237258
Nitrate as N	mg/L		0.05	7.09	7.30	2.12	0.62
Nitrite as N	mg/L		0.05	<0.05	<0.05	<0.05	<0.05

Comments: RDL - Reported Detection Limit; G / S - Guideline / Standard

Certified By: Amanjot Bhela

Results relate only to the items tested and to all the items tested

TOWN OF CALEDON
PLANNING
RECEIVED
Jul 12, 2021

AGAT Laboratories
5835 COOPERS AVENUE
MISSISSAUGA, ONTARIO
CANADA L4Z 1Y2
TEL (905)712-5100
FAX (905)712-5122
http://www.agatlabs.com

Quality Assurance

CLIENT NAME: R.J. BURNSIDE & ASSOCIATES LTD
AGAT WORK ORDER: 15T047356
PROJECT: 300033273
ATTENTION TO: Dwight Smikle
SAMPLING SITE:
SAMPLED BY:MV

Water Analysis

RPT Date: Dec 04, 2015			DUPLICATE				REFERENCE MATERIAL			METHOD BLANK SPIKE			MATRIX SPIKE		
PARAMETER	Batch	Sample Id	Dup #1	Dup #2	RPD	Method Blank	Measured Value	Acceptable Limits		Recovery	Acceptable Limits		Recovery	Acceptable Limits	
								Lower	Upper		Lower	Upper		Lower	Upper
Nitrate/Nitrite (Water)															
Nitrate as N	7238301		<0.25	<0.25	NA	< 0.05	90%	90%	110%	92%	90%	110%	96%	80%	120%
Nitrite as N	7238301		<0.25	<0.25	NA	< 0.05	NA	90%	110%	106%	90%	110%	91%	80%	120%

Comments: NA signifies Not Applicable.
Duplicate Qualifier: As the measured result approaches the RL, the uncertainty associated with the value increases dramatically, thus duplicate acceptance limits apply only where the average of the two duplicates is greater than five times the RL.

Certified By: Amanjot Bhela

AGAT Laboratories is accredited to ISO/IEC 17025 by the Canadian Association for Laboratory Accreditation Inc. (CALA) and/or Standards Council of Canada (SCC) for specific tests listed on the scope of accreditation. AGAT Laboratories (Mississauga) is also accredited by the Canadian Association for Laboratory Accreditation Inc. (CALA) for specific drinking water tests. Accreditations are location and parameter specific. A complete listing of parameters for each location is available from www.cala.ca and/or www.scc.ca. The tests in this report may not necessarily be included in the scope of accreditation.

Results relate only to the items tested and to all the items tested

TOWN OF CALEDON
PLANNING
RECEIVED
Jul 12, 2021

AGAT Laboratories

5835 COOPERS AVENUE
MISSISSAUGA, ONTARIO
CANADA L4Z 1Y2
TEL (905)712-5100
FAX (905)712-5122
http://www.agatlabs.com

Method Summary

CLIENT NAME: R.J. BURNSIDE & ASSOCIATES LTD

AGAT WORK ORDER: 15T047356

PROJECT: 300033273

ATTENTION TO: Dwight Smikle

SAMPLING SITE:

SAMPLED BY:MV

PARAMETER	AGAT S.O.P	LITERATURE REFERENCE	ANALYTICAL TECHNIQUE
Water Analysis			
Nitrate as N	INOR-93-6004	SM 4110 B	ION CHROMATOGRAPH
Nitrite as N	INOR-93-6004	SM 4110 B	ION CHROMATOGRAPH

Results relate only to the items tested and to all the items tested

AGAT Laboratories
5835 Coopers Avenue
Mississauga, Ontario L4Z 1Y2
Ph: 905.712.5100 Fax: 905.712.5122
webearth.agatlabs.com

Chain of Custody Record

If this is a Drinking Water sample, please use Drinking Water Chain of Custody Form (potable water intended for human consumption)

Laboratory Use Only

Work Order #: 15T047356

Cooler Quantity: large

Arrival Temperatures: 4.2 | 3.8 | 3.5 | 2.7 | 3 | 3.2

Custody Seal Intact: ☐Yes ☐No ☒N/A

Notes:

Report Information:

Company: RJ Burnside

Contact: Dwight Smikle

Address: 292 Speedvale Ave. West, Unit 20 Guelph ONT. N1H 1C4

Phone: 519-823-4995 Fax:

Reports to be sent to:

1. Email: Dwight.Smikle@rjburnside.com
2. Email:

Regulatory Requirements: ☐ No Regulatory Requirement

(Please check all applicable boxes)

☐ Regulation 153/04 — Table ____ (Indicate One): ☐Ind/Com ☐Res/Park ☐Agriculture

Soil Texture (Check One): ☐Coarse ☐Fine

☐ Sewer Use: ☐Sanitary ☐Storm — Region ____ (Indicate One)

☐ Regulation 558

☐ CCME

☐ Prov. Water Quality Objectives (PWQO)

☐ Other ____ (Indicate One)

Is this submission for a **Record of Site Condition?** ☐ Yes ☒ No

Report Guideline on Certificate of Analysis ☒ Yes ☐ No

Turnaround Time (TAT) Required:

Regular TAT ☒ 5 to 7 Business Days

Rush TAT (Rush Surcharges Apply)

☐ 3 Business Days ☐ 2 Business Days ☐ 1 Business Day

OR Date Required (Rush Surcharges May Apply):

Please provide prior notification for rush TAT

**TAT is exclusive of weekends and statutory holidays*

Project Information:

Project: 300033273

Site Location: Bel Fountain

Sampled By: Matt Valeriote

AGAT Quote #: PO:

Please note: If quotation number is not provided, client will be billed full price for analysis.

Invoice Information:

Bill To Same: Yes ☐ No ☐

Company:

Contact:

Address:

Email:

Sample Matrix Legend

B	Biota
GW	Ground Water
O	Oil
P	Paint
S	Soil
SD	Sediment
SW	Surface Water

(Check Applicable)

Sample Identification	Date Sampled	Time Sampled	# of Containers	Sample Matrix	Comments/ Special Instructions	Metals and Inorganics	Metal Scan	Hydride Forming Metals	Client Custom Metals	ORPs: ☐B-HWS ☐Cl ☐CN ☐Cr6+ ☐EC ☐FOC ☒NO3/NO2 ☐Total N ☐Hg ☐pH ☐SAR	Nutrients: ☐TP ☐NH3 ☐TKN ☐NO3 ☐NO2 ☒NO3/NO2	Volatiles: ☐VOC ☐BTEX ☐THM	CCME Fractions 1 to 4	ABNs	PAHs	Chlorophenols	PCBs	Organochlorine Pesticides	TCLP Metals/Inorganics	Sewer Use
TW5	11/26/15	11:00	1	GW						X	X									
TW6	↓	12:00	1	GW						X	X									
PW2	↓	12:45	1	GW						X	X									
TW2	↓	13:45	1	GW						X	X									

Samples Relinquished By (Print Name and Sign):	Date	Time	Samples Received By (Print Name and Sign):	Date	Time
Matt Valeriote / [signature]			[signature]	2015-11-27	12:46
[signature]	2015-11-27	3:37			

Page 1 of 1

Nº: T 018756

Pink Copy - Client | Yellow Copy - AGAT | White Copy - AGAT

Document ID: DIV-78-1001.010

Date Issued: November 2, 2015

TOWN OF CALEDON PLANNING RECEIVED Jul 12, 2021

TOWN OF CALEDON
PLANNING
RECEIVED
Jul 12, 2021

AGAT Laboratories

5835 COOPERS AVENUE
MISSISSAUGA, ONTARIO
CANADA L4Z 1Y2
TEL (905)712-5100
FAX (905)712-5122
http://www.agatlabs.com

CLIENT NAME: R.J. BURNSIDE & ASSOCIATES LTD
292 Speedvale Avenue West, Unit 7
Guelph, ON N1H1C4
(519) 823-4995

ATTENTION TO: Dwight Smikle

PROJECT: Belfountain

AGAT WORK ORDER: 15T990997

WATER ANALYSIS REVIEWED BY: Anthony Dapaah, PhD (Chem), Inorganic Lab Manager

DATE REPORTED: Jul 08, 2015

PAGES (INCLUDING COVER): 5

VERSION*: 1

Should you require any information regarding this analysis please contact your client services representative at (905) 712-5100

*NOTES

All samples will be disposed of within 30 days following analysis. Please contact the lab if you require additional sample storage time.

Member of: Association of Professional Engineers, Geologists and Geophysicists of Alberta (APEGGA)
Western Enviro-Agricultural Laboratory Association (WEALA)
Environmental Services Association of Alberta (ESAA)

AGAT Laboratories is accredited to ISO/IEC 17025 by the Canadian Association for Laboratory Accreditation Inc. (CALA) and/or Standards Council of Canada (SCC) for specific tests listed on the scope of accreditation. AGAT Laboratories (Mississauga) is also accredited by the Canadian Association for Laboratory Accreditation Inc. (CALA) for specific drinking water tests. Accreditations are location and parameter specific. A complete listing of parameters for each location is available from www.cala.ca and/or www.scc.ca. The tests in this report may not necessarily be included in the scope of accreditation.

Results relate only to the items tested and to all the items tested
All reportable information as specified by ISO 17025:2005 is available from AGAT Laboratories upon request

TOWN OF CALEDON
PLANNING
RECEIVED

Jul 12, 2021

AGAT Laboratories

5835 COOPERS AVENUE
MISSISSAUGA, ONTARIO
CANADA L4Z 1Y2
TEL (905)712-5100
FAX (905)712-5122
http://www.agatlabs.com

Certificate of Analysis

AGAT WORK ORDER: 15T990997

PROJECT: Belfountain

CLIENT NAME: R.J. BURNSIDE & ASSOCIATES LTD

ATTENTION TO: Dwight Smikle

SAMPLING SITE:

SAMPLED BY:Sean Quinlan

Nitrate (Water)

DATE RECEIVED: 2015-06-30

DATE REPORTED: 2015-07-08

		SAMPLE DESCRIPTION:		TW2	TW6	OW1	TW5	PW2
		SAMPLE TYPE:		Water	Water	Water	Water	Water
		DATE SAMPLED:		6/29/2015	6/29/2015	6/29/2015	6/29/2015	6/29/2015
Parameter	Unit	G / S	RDL	6701611	6701612	6701613	6701614	6701615
Nitrate as N	mg/L		0.05	0.70	8.20	1.89	8.28	4.15

Comments: RDL - Reported Detection Limit; G / S - Guideline / Standard

Certified By:

Results relate only to the items tested and to all the items tested

TOWN OF CALEDON
PLANNING
RECEIVED
Jul 12, 2021

AGAT Laboratories
5835 COOPERS AVENUE
MISSISSAUGA, ONTARIO
CANADA L4Z 1Y2
TEL (905)712-5100
FAX (905)712-5122
http://www.agatlabs.com

Quality Assurance

CLIENT NAME: R.J. BURNSIDE & ASSOCIATES LTD
AGAT WORK ORDER: 15T990997
PROJECT: Belfountain
ATTENTION TO: Dwight Smikle
SAMPLING SITE:
SAMPLED BY:Sean Quinlan

Water Analysis

RPT Date: Jul 08, 2015			DUPLICATE				REFERENCE MATERIAL			METHOD BLANK SPIKE			MATRIX SPIKE		
PARAMETER	Batch	Sample Id	Dup #1	Dup #2	RPD	Method Blank	Measured Value	Acceptable Limits		Recovery	Acceptable Limits		Recovery	Acceptable Limits	
								Lower	Upper		Lower	Upper		Lower	Upper
Nitrate (Water)															
Nitrate as N	6698272		14.4	14.3	0.7%	< 0.05	96%	90%	110%	107%	90%	110%	106%	80%	120%

Certified By:

AGAT Laboratories is accredited to ISO/IEC 17025 by the Canadian Association for Laboratory Accreditation Inc. (CALA) and/or Standards Council of Canada (SCC) for specific tests listed on the scope of accreditation. AGAT Laboratories (Mississauga) is also accredited by the Canadian Association for Laboratory Accreditation Inc. (CALA) for specific drinking water tests. Accreditations are location and parameter specific. A complete listing of parameters for each location is available from www.cala.ca and/or www.scc.ca. The tests in this report may not necessarily be included in the scope of accreditation.

Results relate only to the items tested and to all the items tested

TOWN OF CALEDON
PLANNING
RECEIVED
Jul 12, 2021

AGAT Laboratories

5835 COOPERS AVENUE
MISSISSAUGA, ONTARIO
CANADA L4Z 1Y2
TEL (905)712-5100
FAX (905)712-5122
http://www.agatlabs.com

Method Summary

CLIENT NAME: R.J. BURNSIDE & ASSOCIATES LTD

AGAT WORK ORDER: 15T990997

PROJECT: Belfountain

ATTENTION TO: Dwight Smikle

SAMPLING SITE:

SAMPLED BY:Sean Quinlan

PARAMETER	AGAT S.O.P	LITERATURE REFERENCE	ANALYTICAL TECHNIQUE
Water Analysis			
Nitrate as N	INOR-93-6004	SM 4110 B	ION CHROMATOGRAPH

Results relate only to the items tested and to all the items tested

AGAT Laboratories
5835 Coopers Avenue
Mississauga, Ontario L4Z 1Y2
Ph: 905.712.5100 Fax: 905.712.5122
www.agatlabs.com webearth.agatlabs.com

Chain of Custody Record

If this is a Drinking Water sample, please use Drinking Water Chain of Custody Form (potable water intended for human consumption)

Laboratory Use Only

Work Order #: 15T990997

Cooler Quantity:

Arrival Temperatures: 8.7 | 8.9 | 8.5
8.7 | 7.9 | 7.9

Custody Seal Intact: ☐ Yes ☐ No ☐ N/A

Notes:

Report Information:

Company: BURNSIDE
Contact: DWIGHT SMIKLE
Address: 292 Speedvale Ave
Guelph ON
Phone: 823-4995 Fax:
Reports to be sent to:
1. Email: dwight.smikle@rjburnside.com
2. Email:

Regulatory Requirements: ☐ No Regulatory Requirement

(Please check all applicable boxes)

☐ Regulation 153/04
Table ____ *Indicate One*
☐ Ind/Com
☐ Res/Park
☐ Agriculture
Soil Texture *(Check One)*
☐ Coarse
☐ Fine

☐ Sewer Use
☐ Sanitary
☐ Storm
Region ____ *Indicate One*

☐ Regulation 558
☐ CCME
☐ Prov. Water Quality Objectives (PWQO)
☐ Other
Indicate One

Is this submission for a **Record of Site Condition?** ☐ Yes ☒ No

Report Guideline on *Certificate of Analysis* ☐ Yes ☒ No

Turnaround Time (TAT) Required:

Regular TAT ☒ 5 to 7 Business Days

Rush TAT (Rush Surcharges Apply)

☐ 3 Business Days ☐ 2 Business Days ☐ 1 Business Day

OR Date Required (Rush Surcharges May Apply):

Please provide prior notification for rush TAT
**TAT is exclusive of weekends and statutory holidays*

Project Information:

Project: Belfountain
Site Location: 300033273
Sampled By: SEAN QUINLAN
AGAT Quote #: PO:
Please note: If quotation number is not provided, client will be billed full price for analysis.

Invoice Information:

Bill To Same: Yes ☐ No ☐

Company:
Contact:
Address:
Email:

Sample Matrix Legend

B	Biota
GW	Ground Water
O	Oil
P	Paint
S	Soil
SD	Sediment
SW	Surface Water

Sample Identification	Date Sampled	Time Sampled	# of Containers	Sample Matrix	Comments/ Special Instructions	Metals and Inorganics	Metal Scan	Hydride Forming Metals	Client Custom Metals	ORPs: ☐ B-HWS ☐ Cl ☐ CN ☐ Cr^{6+} ☐ EC ☐ FOC ☐ NO_3/NO_2 ☐ Total N ☐ Hg ☐ pH ☐ SAR	Nutrients: ☐ TP ☐ NH_3 ☐ TKN ☐ NO_3 ☐ NO_2 ☐ NO_3/NO_2	Volatiles: ☐ VOC ☐ BTEX ☐ THM	CCME Fractions 1 to 4	ABNs	PAHs	Chlorophenols	PCBs	Organochlorine Pesticides	TCLP Metals/Inorganics	Sewer Use	Nitrate
TW2	29 JUNE 15	12:00	1	GW																✓
TW6	↓	9:20	1	↓																✓
BW1		10:20	1																	✓
TW5		10:00	1																	✓
PW2		11:00	1																	✓

Samples Relinquished By (Print Name and Sign): SEAN QUINLAN — Date: 29 JUNE 15 — Time:
Samples Relinquished By (Print Name and Sign): — Date: — Time:
Samples Received By (Print Name and Sign): — Date: Jun 30/15 — Time: 11:40
Samples Received By (Print Name and Sign): — Date: Jun 30/15 — Time: 3:22

Page 1 of 1

N°: T 009718

TOWN OF CALEDON PLANNING RECEIVED Jul 13, 2021

TOWN OF CALEDON
PLANNING
RECEIVED

Jul 12, 2021

AGAT Laboratories

5835 COOPERS AVENUE
MISSISSAUGA, ONTARIO
CANADA L4Z 1Y2
TEL (905)712-5100
FAX (905)712-5122
http://www.agatlabs.com

Certificate of Analysis

AGAT WORK ORDER: 15W020701

PROJECT: Belfountain

CLIENT NAME: R.J. BURNSIDE & ASSOCIATES LTD

ATTENTION TO: Dwight Smikle

SAMPLING SITE:

SAMPLED BY:

Water Quality Assessment

DATE RECEIVED: 2015-09-18

DATE REPORTED: 2015-09-28

SAMPLE DESCRIPTION:				TW2	TW6	TW5	PW2
SAMPLE TYPE:				Water	Water	Water	Water
DATE SAMPLED:				9/17/2015	9/17/2015	9/17/2015	9/17/2015
Parameter	Unit	G / S	RDL	6988471	6988476	6988482	6988488
Electrical Conductivity	uS/cm		2	561	661	655	596
pH	pH Units		NA	8.14	8.11	8.12	8.16
Saturation pH				6.96	7.01	7.01	6.99
Langelier Index				1.18	1.10	1.11	1.17
Total Hardness (as CaCO3)	mg/L		0.5	299	302	301	295
Total Dissolved Solids	mg/L		20	308	356	368	330
Alkalinity (as CaCO3)	mg/L		5	263	235	234	251
Bicarbonate (as CaCO3)	mg/L		5	263	235	234	251
Carbonate (as CaCO3)	mg/L		5	<5	<5	<5	<5
Hydroxide (as CaCO3)	mg/L		5	<5	<5	<5	<5
Fluoride	mg/L		0.25	<0.25	<0.25	<0.25	<0.25
Chloride	mg/L		0.50	6.85	38.1	37.9	22.9
Nitrate as N	mg/L		0.25	1.00	7.48	7.77	2.75
Nitrite as N	mg/L		0.25	<0.25	<0.25	<0.25	<0.25
Bromide	mg/L		0.25	<0.25	<0.25	<0.25	<0.25
Sulphate	mg/L		0.50	23.5	23.2	22.8	22.0
Ortho Phosphate as P	mg/L		0.50	<0.50	<0.50	<0.50	<0.50
Reactive Silica	mg/L		0.05	11.5	7.07	7.42	8.45
Ammonia as N	mg/L		0.02	<0.02	<0.02	<0.02	<0.02
Total Phosphorus	mg/L		0.05	<0.05	<0.05	<0.05	<0.05
Total Organic Carbon	mg/L		0.5	1.1	0.6	1.0	0.7
Colour	TCU		5	<5	<5	<5	<5
Turbidity	NTU		0.5	4.3	1.1	8.2	1.2
Calcium	mg/L		0.05	79.5	83.1	83.4	77.6
Magnesium	mg/L		0.05	24.3	23.0	22.6	24.7
Sodium	mg/L		0.05	3.47	16.5	15.8	9.37
Potassium	mg/L		0.05	1.12	0.99	1.13	0.84
Aluminum	mg/L		0.004	<0.004	<0.004	<0.004	<0.004
Antimony	mg/L		0.003	<0.003	<0.003	<0.003	<0.003
Arsenic	mg/L		0.003	<0.003	<0.003	<0.003	<0.003

Certified By:

Results relate only to the items tested and to all the items tested

TOWN OF CALEDON
PLANNING
RECEIVED
Jul 12, 2021

AGAT Laboratories

5835 COOPERS AVENUE
MISSISSAUGA, ONTARIO
CANADA L4Z 1Y2
TEL (905)712-5100
FAX (905)712-5122
http://www.agatlabs.com

Certificate of Analysis

AGAT WORK ORDER: 15W020701

PROJECT: Belfountain

CLIENT NAME: R.J. BURNSIDE & ASSOCIATES LTD

ATTENTION TO: Dwight Smikle

SAMPLING SITE:

SAMPLED BY:

Water Quality Assessment

DATE RECEIVED: 2015-09-18

DATE REPORTED: 2015-09-28

		SAMPLE DESCRIPTION:		TW2	TW6	TW5	PW2
		SAMPLE TYPE:		Water	Water	Water	Water
		DATE SAMPLED:		9/17/2015	9/17/2015	9/17/2015	9/17/2015
Parameter	Unit	G / S	RDL	6988471	6988476	6988482	6988488
Barium	mg/L		0.002	0.088	0.107	0.110	0.050
Beryllium	mg/L		0.001	<0.001	<0.001	<0.001	<0.001
Boron	mg/L		0.010	<0.010	<0.010	<0.010	<0.010
Cadmium	mg/L		0.001	<0.001	<0.001	<0.001	<0.001
Chromium	mg/L		0.003	<0.003	<0.003	<0.003	<0.003
Cobalt	mg/L		0.001	<0.001	<0.001	<0.001	<0.001
Copper	mg/L		0.003	<0.003	<0.003	<0.003	<0.003
Iron	mg/L		0.010	<0.010	<0.010	<0.010	<0.010
Lead	mg/L		0.002	<0.002	<0.002	<0.002	<0.002
Manganese	mg/L		0.002	<0.002	<0.002	<0.002	<0.002
Mercury	mg/L		0.0001	<0.0001	<0.0001	<0.0001	<0.0001
Molybdenum	mg/L		0.002	<0.002	<0.002	<0.002	<0.002
Nickel	mg/L		0.003	0.004	0.004	0.004	0.004
Selenium	mg/L		0.004	<0.004	<0.004	<0.004	<0.004
Silver	mg/L		0.002	<0.002	<0.002	<0.002	<0.002
Strontium	mg/L		0.005	0.128	0.193	0.184	0.126
Thallium	mg/L		0.006	<0.006	<0.006	<0.006	<0.006
Tin	mg/L		0.002	<0.002	<0.002	<0.002	<0.002
Titanium	mg/L		0.002	<0.002	<0.002	<0.002	<0.002
Tungsten	mg/L		0.010	<0.010	<0.010	<0.010	<0.010
Uranium	mg/L		0.002	<0.002	<0.002	<0.002	<0.002
Vanadium	mg/L		0.002	<0.002	<0.002	<0.002	<0.002
Zinc	mg/L		0.005	0.010	0.018	0.018	0.021
Zirconium	mg/L		0.004	<0.004	<0.004	<0.004	<0.004
% Difference/ Ion Balance	%		NA	1.09	0.0657	0.298	0.104

Comments: RDL - Reported Detection Limit; G / S - Guideline / Standard

Certified By:

Results relate only to the items tested and to all the items tested

TOWN OF CALEDON
PLANNING
RECEIVED
Jul 12, 2021

AGAT Laboratories

5835 COOPERS AVENUE
MISSISSAUGA, ONTARIO
CANADA L4Z 1Y2
TEL (905)712-5100
FAX (905)712-5122
http://www.agatlabs.com

Quality Assurance

CLIENT NAME: R.J. BURNSIDE & ASSOCIATES LTD
AGAT WORK ORDER: 15W020701
PROJECT: Belfountain
ATTENTION TO: Dwight Smikle
SAMPLING SITE:
SAMPLED BY:

Water Analysis

RPT Date: Sep 28, 2015

PARAMETER	Batch	Sample Id	DUPLICATE			Method Blank	REFERENCE MATERIAL			METHOD BLANK SPIKE			MATRIX SPIKE		
			Dup #1	Dup #2	RPD		Measured Value	Acceptable Limits		Recovery	Acceptable Limits		Recovery	Acceptable Limits	
								Lower	Upper		Lower	Upper		Lower	Upper
Water Quality Assessment															
Electrical Conductivity	6988394		576	577	0.2%	< 2	100%	80%	120%	NA			NA		
pH	6988394		8.14	8.07	0.9%	NA	99%	90%	110%	NA			NA		
Total Dissolved Solids	6993029		198	196	1.0%	< 20	100%	80%	120%	NA			NA		
Alkalinity (as CaCO3)	6988394		201	201	0.0%	< 5	96%	80%	120%	NA			NA		
Bicarbonate (as CaCO3)	6988394		201	201	0.0%	< 5	NA			NA			NA		
Carbonate (as CaCO3)	6988394		<5	<5	0.0%	< 5	NA			NA			NA		
Hydroxide (as CaCO3)	6988394		<5	<5	0.0%	< 5	NA			NA			NA		
Fluoride	6988476	6988476	<0.25	<0.25	0.0%	< 0.05	105%	90%	110%	107%	90%	110%	101%	80%	120%
Chloride	6988476	6988476	38.1	39.3	3.1%	< 0.10	96%	90%	110%	103%	90%	110%	104%	80%	120%
Nitrate as N	6988476	6988476	7.48	7.63	2.0%	< 0.05	93%	90%	110%	104%	90%	110%	105%	80%	120%
Nitrite as N	6988476	6988476	<0.25	<0.25	0.0%	< 0.05	NA	90%	110%	100%	90%	110%	98%	80%	120%
Bromide	6988476	6988476	<0.25	<0.25	0.0%	< 0.05	109%	90%	110%	101%	90%	110%	98%	80%	120%
Sulphate	6988476	6988476	23.2	23.7	2.1%	< 0.10	108%	90%	110%	104%	90%	110%	103%	80%	120%
Ortho Phosphate as P	6988476	6988476	<0.50	<0.50	0.0%	< 0.10	102%	90%	110%	96%	90%	110%	99%	80%	120%
Reactive Silica	6970809		10.6	10.6	0.0%	< 0.05	98%	90%	110%	101%	90%	110%	89%	80%	120%
Ammonia as N	6984408		<0.02	<0.02	0.0%	< 0.02	102%	90%	110%	103%	90%	110%	99%	80%	120%
Total Phosphorus	6985416		0.98	1.00	2.0%	< 0.05	96%	80%	120%	93%	90%	110%	97%	70%	130%
Total Organic Carbon	6985404		15.5	16.0	3.2%	< 0.5	93%	90%	110%	108%	90%	110%	83%	80%	120%
Colour	6984708		126	126	0.0%	< 5	103%	90%	110%	NA			NA		
Turbidity	6988488	6988488	1.2	1.3	8.0%	< 0.5	94%	90%	110%	NA			NA		
Calcium	6985382		57.8	58.8	1.7%	< 0.05	105%	90%	110%	101%	90%	110%	103%	70%	130%
Magnesium	6985382		31.4	31.8	1.3%	< 0.05	102%	90%	110%	98%	90%	110%	100%	70%	130%
Sodium	6985382		14.8	14.7	0.7%	< 0.05	104%	90%	110%	101%	90%	110%	104%	70%	130%
Potassium	6985382		5.51	5.60	1.6%	< 0.05	104%	90%	110%	101%	90%	110%	107%	70%	130%
Aluminum	6987565		0.006	0.006	0.0%	< 0.004	103%	90%	110%	109%	90%	110%	103%	70%	130%
Antimony	6987565		<0.003	<0.003	0.0%	< 0.003	108%	90%	110%	105%	90%	110%	106%	70%	130%
Arsenic	6987565		<0.003	<0.003	0.0%	< 0.003	107%	90%	110%	110%	90%	110%	113%	70%	130%
Barium	6987565		0.120	0.121	0.8%	< 0.002	106%	90%	110%	107%	90%	110%	104%	70%	130%
Beryllium	6987565		<0.001	<0.001	0.0%	< 0.001	103%	90%	110%	108%	90%	110%	106%	70%	130%
Boron	6987565		0.146	0.143	2.1%	< 0.010	104%	90%	110%	108%	90%	110%	100%	70%	130%
Cadmium	6987565		<0.001	<0.001	0.0%	< 0.001	101%	90%	110%	104%	90%	110%	102%	70%	130%
Chromium	6987565		<0.003	<0.003	0.0%	< 0.003	103%	90%	110%	109%	90%	110%	100%	70%	130%
Cobalt	6987565		<0.001	<0.001	0.0%	< 0.001	103%	90%	110%	107%	90%	110%	102%	70%	130%
Copper	6987565		<0.003	<0.003	0.0%	< 0.003	102%	90%	110%	108%	90%	110%	93%	70%	130%
Iron	6987565		<0.010	<0.010	0.0%	< 0.010	102%	90%	110%	100%	90%	110%	96%	70%	130%
Lead	6987565		<0.002	<0.002	0.0%	< 0.002	104%	90%	110%	105%	90%	110%	105%	70%	130%
Manganese	6987565		0.003	0.003	0.0%	< 0.002	100%	90%	110%	107%	90%	110%	87%	70%	130%
Mercury	6985826		<0.0001	<0.0001	0.0%	< 0.0001	101%	90%	110%	98%	90%	110%	96%	80%	120%
Molybdenum	6987565		<0.002	<0.002	0.0%	< 0.002	96%	90%	110%	97%	90%	110%	98%	70%	130%

AGAT Laboratories is accredited to ISO/IEC 17025 by the Canadian Association for Laboratory Accreditation Inc. (CALA) and/or Standards Council of Canada (SCC) for specific tests listed on the scope of accreditation. AGAT Laboratories (Mississauga) is also accredited by the Canadian Association for Laboratory Accreditation Inc. (CALA) for specific drinking water tests. Accreditations are location and parameter specific. A complete listing of parameters for each location is available from www.cala.ca and/or www.scc.ca. The tests in this report may not necessarily be included in the scope of accreditation.

Results relate only to the items tested and to all the items tested

TOWN OF CALEDON
PLANNING
RECEIVED
Jul 12, 2021

AGAT Laboratories
5835 COOPERS AVENUE
MISSISSAUGA, ONTARIO
CANADA L4Z 1Y2
TEL (905)712-5100
FAX (905)712-5122
http://www.agatlabs.com

Quality Assurance

CLIENT NAME: R.J. BURNSIDE & ASSOCIATES LTD
AGAT WORK ORDER: 15W020701
PROJECT: Belfountain
ATTENTION TO: Dwight Smikle
SAMPLING SITE:
SAMPLED BY:

Water Analysis (Continued)

RPT Date: Sep 28, 2015			DUPLICATE				REFERENCE MATERIAL			METHOD BLANK SPIKE			MATRIX SPIKE		
PARAMETER	Batch	Sample Id	Dup #1	Dup #2	RPD	Method Blank	Measured Value	Acceptable Limits		Recovery	Acceptable Limits		Recovery	Acceptable Limits	
								Lower	Upper		Lower	Upper		Lower	Upper
Nickel	6987565		0.006	0.006	0.0%	< 0.003	103%	90%	110%	107%	90%	110%	98%	70%	130%
Selenium	6987565		<0.004	<0.004	0.0%	< 0.004	98%	90%	110%	102%	90%	110%	114%	70%	130%
Silver	6987565		<0.002	<0.002	0.0%	< 0.002	100%	90%	110%	114%	90%	110%	86%	70%	130%
Strontium	6987565		0.179	0.178	0.6%	< 0.005	103%	90%	110%	105%	90%	110%	106%	70%	130%
Thallium	6987565		<0.006	<0.006	0.0%	< 0.006	101%	90%	110%	102%	90%	110%	103%	70%	130%
Tin	6987565		<0.002	<0.002	0.0%	< 0.002	103%	90%	110%	105%	90%	110%	102%	70%	130%
Titanium	6987565		<0.002	<0.002	0.0%	< 0.002	104%	90%	110%	103%	90%	110%	99%	70%	130%
Tungsten	6987565		<0.010	<0.010	0.0%	< 0.010	107%	90%	110%	101%	90%	110%	105%	70%	130%
Uranium	6987565		<0.002	<0.002	0.0%	< 0.002	96%	90%	110%	95%	90%	110%	100%	70%	130%
Vanadium	6987565		<0.002	<0.002	0.0%	< 0.002	102%	90%	110%	108%	90%	110%	104%	70%	130%
Zinc	6987565		<0.005	<0.005	0.0%	< 0.005	101%	90%	110%	107%	90%	110%	105%	70%	130%
Zirconium	6987565		<0.004	<0.004	0.0%	< 0.004	93%	90%	110%	99%	90%	110%	96%	70%	130%

Comments: NA signifies Not Applicable
QA Qualifier for Silver: In a multi-element scan up to 10% of analytes may exceed the quoted limits for lab control standards and matrix spike by up to 10% absolute and the spike is deemed acceptable.

Certified By:

AGAT Laboratories is accredited to ISO/IEC 17025 by the Canadian Association for Laboratory Accreditation Inc. (CALA) and/or Standards Council of Canada (SCC) for specific tests listed on the scope of accreditation. AGAT Laboratories (Mississauga) is also accredited by the Canadian Association for Laboratory Accreditation Inc. (CALA) for specific drinking water tests. Accreditations are location and parameter specific. A complete listing of parameters for each location is available from www.cala.ca and/or www.scc.ca. The tests in this report may not necessarily be included in the scope of accreditation.

Results relate only to the items tested and to all the items tested

TOWN OF CALEDON
PLANNING
RECEIVED
Jul 12, 2021

AGAT Laboratories

5835 COOPERS AVENUE
MISSISSAUGA, ONTARIO
CANADA L4Z 1Y2
TEL (905)712-5100
FAX (905)712-5122
http://www.agatlabs.com

QA Violation

CLIENT NAME: R.J. BURNSIDE & ASSOCIATES LTD

AGAT WORK ORDER: 15W020701

PROJECT: Belfountain

ATTENTION TO: Dwight Smikle

RPT Date: Sep 28, 2015

PARAMETER	Sample Id	Sample Description	REFERENCE MATERIAL			METHOD BLANK SPIKE			MATRIX SPIKE		
			Measured Value	Acceptable Limits		Recovery	Acceptable Limits		Recovery	Acceptable Limits	
				Lower	Upper		Lower	Upper		Lower	Upper
Water Quality Assessment											
Silver		TW2	100%	90%	110%	114%	90%	110%	86%	70%	130%

Comments: NA signifies Not Applicable
QA Qualifier for Silver: In a multi-element scan up to 10% of analytes may exceed the quoted limits for lab control standards and matrix spike by up to 10% absolute and the spike is deemed acceptable.

AGAT Laboratories is accredited to ISO/IEC 17025 by the Canadian Association for Laboratory Accreditation Inc. (CALA) and/or Standards Council of Canada (SCC) for specific tests listed on the scope of accreditation. AGAT Laboratories (Mississauga) is also accredited by the Canadian Association for Laboratory Accreditation Inc. (CALA) for specific drinking water tests. Accreditations are location and parameter specific. A complete listing of parameters for each location is available from www.cala.ca and/or www.scc.ca. The tests in this report may not necessarily be included in the scope of accreditation.

Results relate only to the items tested and to all the items tested

TOWN OF CALEDON
PLANNING
RECEIVED
Jul 12, 2021

AGAT Laboratories
5835 COOPERS AVENUE
MISSISSAUGA, ONTARIO
CANADA L4Z 1Y2
TEL (905)712-5100
FAX (905)712-5122
http://www.agatlabs.com

Method Summary

CLIENT NAME: R.J. BURNSIDE & ASSOCIATES LTD

AGAT WORK ORDER: 15W020701

PROJECT: Belfountain

ATTENTION TO: Dwight Smikle

SAMPLING SITE:

SAMPLED BY:

PARAMETER	AGAT S.O.P	LITERATURE REFERENCE	ANALYTICAL TECHNIQUE
Water Analysis			
Electrical Conductivity	INOR-93-6000	SM 2510 B	PC TITRATE
pH	INOR-93-6000	SM 4500-H+ B	PC TITRATE
Saturation pH		SM 2320 B	CALCULATION
Langelier Index		SM 2330B	CALCULATION
Total Hardness (as CaCO3)	MET-93-6105	EPA SW-846 6010C & 200.7	ICP/OES
Total Dissolved Solids	INOR-93-6028	SM 2540 C	BALANCE
Alkalinity (as CaCO3)	INOR-93-6000	SM 2320 B	PC TITRATE
Bicarbonate (as CaCO3)	INOR-93-6000	SM 2320 B	PC TITRATE
Carbonate (as CaCO3)	INOR-93-6000	SM 2320 B	PC TITRATE
Hydroxide (as CaCO3)	INOR-93-6000	SM 2320 B	PC TITRATE
Fluoride	INOR-93-6004	SM 4110 B	ION CHROMATOGRAPH
Chloride	INOR-93-6004	SM 4110 B	ION CHROMATOGRAPH
Nitrate as N	INOR-93-6004	SM 4110 B	ION CHROMATOGRAPH
Nitrite as N	INOR-93-6004	SM 4110 B	ION CHROMATOGRAPH
Bromide	INOR-93-6004	SM 4110 B	ION CHROMATOGRAPH
Sulphate	INOR-93-6004	SM 4110 B	ION CHROMATOGRAPH
Ortho Phosphate as P	INOR-93-6004	SM 4110 B	ION CHROMATOGRAPH
Reactive Silica	INOR-93-6047	AQ2 EPA-122A & SM 4500 SiO2 D	AQ2 DISCRETE ANALYSER
Ammonia as N	INOR-93-6059	QuikChem 10-107-06-1-J & SM 4500 NH3-F	LACHAT FIA
Total Phosphorus	INOR-93-6057	QuikChem 10-115-01-3-A & SM 4500-P I	LACHAT FIA
Total Organic Carbon	INOR-93-6049	EPA 415.1 & SM 5310	SHIMADZU CARBON ANALYZER
Colour	INOR-93-6046	SM 2120 B	SPECTROPHOTOMETER
Turbidity	INOR-93-6044	SM 2130 B	NEPHELOMETER
Calcium	MET-93-6105	EPA SW-846 6010C & 200.7	ICP/OES
Magnesium	MET-93-6105	EPA SW-846 6010C & 200.7	ICP/OES
Sodium	MET-93-6105	EPA SW-846 6010C & 200.7	ICP/OES
Potassium	MET-93-6105	EPA SW-846 6010C & 200.7	ICP/OES
Aluminum	MET-93-6103	EPA SW-846 6020A & 200.8	ICP-MS
Antimony	MET-93-6103	EPA SW-846 6020A & 200.8	ICP-MS
Arsenic	MET-93-6103	EPA SW-846 6020A & 200.8	ICP-MS
Barium	MET-93-6103	EPA SW-846 6020A & 200.8	ICP-MS
Beryllium	MET-93-6103	EPA SW-846 6020A & 200.8	ICP-MS
Boron	MET-93-6103	EPA SW-846 6020A & 200.8	ICP-MS
Cadmium	MET-93-6103	EPA SW-846 6020A & 200.8	ICP-MS
Chromium	MET-93-6103	EPA SW-846 6020A & 200.8	ICP-MS
Cobalt	MET-93-6103	EPA SW-846 6020A & 200.8	ICP-MS
Copper	MET-93-6103	EPA SW-846 6020A & 200.8	ICP-MS
Iron	MET-93-6103	EPA SW-846 6020A & 200.8	ICP-MS
Lead	MET-93-6103	EPA SW-846 6020A & 200.8	ICP-MS
Manganese	MET-93-6103	EPA SW-846 6020A & 200.8	ICP-MS
Mercury	MET-93-6100	EPA SW 846 7470 & 245.1	CVAAS
Molybdenum	MET-93-6103	EPA SW-846 6020A & 200.8	ICP-MS
Nickel	MET-93-6103	EPA SW-846 6020A & 200.8	ICP-MS
Selenium	MET-93-6103	EPA SW-846 6020A & 200.8	ICP-MS
Silver	MET-93-6103	EPA SW-846 6020A & 200.8	ICP-MS
Strontium	MET-93-6103	EPA SW-846 6020A & 200.8	ICP-MS
Thallium	MET-93-6103	EPA SW-846 6020A & 200.8	ICP-MS

Results relate only to the items tested and to all the items tested

TOWN OF CALEDON
PLANNING
RECEIVED
Jul 12, 2021

AGAT Laboratories

5835 COOPERS AVENUE
MISSISSAUGA, ONTARIO
CANADA L4Z 1Y2
TEL (905)712-5100
FAX (905)712-5122
http://www.agatlabs.com

Method Summary

CLIENT NAME: R.J. BURNSIDE & ASSOCIATES LTD

AGAT WORK ORDER: 15W020701

PROJECT: Belfountain

ATTENTION TO: Dwight Smikle

SAMPLING SITE:

SAMPLED BY:

PARAMETER	AGAT S.O.P	LITERATURE REFERENCE	ANALYTICAL TECHNIQUE
Tin	MET-93-6103	EPA SW-846 6020A & 200.8	ICP-MS
Titanium	MET-93-6103	EPA SW-846 6020A & 200.8	ICP-MS
Tungsten	MET-93-6103	EPA SW-846 6020A & 200.8	ICP-MS
Uranium	MET-93-6103	EPA SW-846 6020A & 200.8	ICP-MS
Vanadium	MET-93-6103	EPA SW-846 6020A & 200.8	ICP-MS
Zinc	MET-93-6103	EPA SW-846 6020A & 200.8	ICP-MS
Zirconium	MET-93-6103	EPA SW-846 6020A & 200.8	ICP-MS
% Difference/ Ion Balance		SM 1030 E	CALCULATION

Results relate only to the items tested and to all the items tested

AGAT Laboratories
5835 Coopers Avenue
Mississauga, Ontario L4Z 1Y2
Ph: 905.712.5100 Fax: 905.712.5122
webearth.agatlabs.com

Chain of Custody Record

If this is a Drinking Water sample, please use Drinking Water Chain of Custody Form (potable water intended for human consumption)

Laboratory Use Only
Work Order #: 15W020701
Cooler Quantity:
Arrival Temperatures: 9.7 | 8.1 | 7.6
Custody Seal Intact: ☐ Yes ☐ No ☐ N/A
Notes: on ice

Report Information:
Company: Burnside
Contact: Dwight Smikle
Address: 292 Speedvale Ave
Guelph ON
Phone: 823 4995 Fax:
Reports to be sent to:
1. Email: Dwight.Smikle@rjburnside.com
2. Email: Sean.Quinlan@rjburnside.com

Regulatory Requirements:
(Please check all applicable boxes)
☑ No Regulatory Requirement

☐ Regulation 153/04
Table ____ (Indicate One)
☐ Ind/Com ☐ Res/Park ☐ Agriculture
Soil Texture (Check One) ☐ Coarse ☐ Fine

☐ Sewer Use
☐ Sanitary ☐ Storm
Region ____ (Indicate One)

☐ Regulation 558
☐ CCME
☐ Prov. Water Quality Objectives (PWQO)
☐ Other ____ (Indicate One)

Is this submission for a Record of Site Condition? ☐ Yes ☑ No

Report Guideline on Certificate of Analysis ☐ Yes ☒ No

Turnaround Time (TAT) Required:
Regular TAT ☑ 5 to 7 Business Days
Rush TAT (Rush Surcharges Apply)
☐ 3 Business Days ☐ 2 Business Days ☐ 1 Business Day
OR Date Required (Rush Surcharges May Apply): ____
Please provide prior notification for rush TAT
*TAT is exclusive of weekends and statutory holidays

Project Information:
Project: Belfountain
Site Location: 30003273
Sampled By: S. Quinlan
AGAT Quote #: PO:
Please note: If quotation number is not provided, client will be billed full price for analysis.

Invoice Information:
Bill To Same: Yes ☑ No ☐
Company:
Contact:
Address:
Email:

Sample Matrix Legend
B	Biota
GW	Ground Water
O	Oil
P	Paint
S	Soil
SD	Sediment
SW	Surface Water

Sample Identification	Date Sampled	Time Sampled	# of Containers	Sample Matrix	Comments/ Special Instructions	Metals and Inorganics	Metal Scan	Hydride Forming Metals	Client Custom Metals	ORPs: ☐ B-HWS ☐ Cl⁻ ☐ CN⁻ ☐ Cr⁶⁺ ☐ EC ☐ FOC ☐ NO_3/NO_2 ☐ Total N ☐ Hg ☐ pH ☐ SAR	Nutrients: ☐ TP ☐ NH_3 ☐ TKN ☐ NO_3 ☐ NO_2 ☐ NO_3/NO_2	Volatiles: ☐ VOC ☐ BTEX ☐ THM	CCME Fractions 1 to 4	ABNs	PAHs	Chlorophenols	PCBs	Organochlorine Pesticides	TCLP Metals/Inorganics	Sewer Use	TDS	Various Inorganics	Metals	Mercury	TOC	Ammonia, Total Phosphorus
TW2	17 Sept 15	12:00	6	GW																		X	X	X	X	X
TW6	↓	10:45	6	GW																		X	X	X	X	X
TW5		10:00	6	GW																		X	X	X	X	X
PW2	↓	11:30	6	GW																		X	X	X	X	X
	↓		~~6~~	~~GW~~																						

WQA

Samples Relinquished By (Print Name and Sign): Sean Quinlan — Date: 17 Sept 15 — Time: 14:00
Samples Received By (Print Name and Sign): M. Kelly Maggie Kelly — Date: 2015/9/18 — Time: 3:13 pm
Samples Relinquished By (Print Name and Sign): — Date: — Time:
Samples Received By (Print Name and Sign): — Date: Sept 19 — Time: 10:00

Page 1 of 1
No: T013128

Pink Copy - Client | Yellow Copy - AGAT | White Copy - AGAT
Document ID: DM-78-1511.009
Date Issued: Jan 8, 2015

TOWN OF CALEDON PLANNING RECEIVED Jul 12, 2021

TOWN OF CALEDON
PLANNING
RECEIVED
Jul 12, 2021

AGAT Laboratories

5835 COOPERS AVENUE
MISSISSAUGA, ONTARIO
CANADA L4Z 1Y2
TEL (905)712-5100
FAX (905)712-5122
http://www.agatlabs.com

CLIENT NAME: R.J. BURNSIDE & ASSOCIATES LTD
292 Speedvale Avenue West, Unit 7
Guelph, ON N1H1C4
(519) 823-4995

ATTENTION TO: Dwight Smikle

PROJECT: 300033273

AGAT WORK ORDER: 15W960815

WATER ANALYSIS REVIEWED BY: Mike Muneswar, BSc (Chem), Senior Inorganic Analyst

DATE REPORTED: Apr 15, 2015

PAGES (INCLUDING COVER): 8

VERSION*: 1

Should you require any information regarding this analysis please contact your client services representative at (905) 712-5100

*NOTES

All samples will be disposed of within 30 days following analysis. Please contact the lab if you require additional sample storage time.

Member of: Association of Professional Engineers, Geologists and Geophysicists of Alberta (APEGGA)
Western Enviro-Agricultural Laboratory Association (WEALA)
Environmental Services Association of Alberta (ESAA)

AGAT Laboratories is accredited to ISO/IEC 17025 by the Canadian Association for Laboratory Accreditation Inc. (CALA) and/or Standards Council of Canada (SCC) for specific tests listed on the scope of accreditation. AGAT Laboratories (Mississauga) is also accredited by the Canadian Association for Laboratory Accreditation Inc. (CALA) for specific drinking water tests. Accreditations are location and parameter specific. A complete listing of parameters for each location is available from www.cala.ca and/or www.scc.ca. The tests in this report may not necessarily be included in the scope of accreditation.

Results relate only to the items tested and to all the items tested

TOWN OF CALEDON
PLANNING
RECEIVED
Jul 12, 2021

AGAT Laboratories

5835 COOPERS AVENUE
MISSISSAUGA, ONTARIO
CANADA L4Z 1Y2
TEL (905)712-5100
FAX (905)712-5122
http://www.agatlabs.com

Certificate of Analysis

AGAT WORK ORDER: 15W960815
PROJECT: 300033273

CLIENT NAME: R.J. BURNSIDE & ASSOCIATES LTD
ATTENTION TO: Dwight Smikle
SAMPLING SITE:
SAMPLED BY:

Water Quality Assessment - Groundwater Samples

DATE RECEIVED: 2015-04-08
DATE REPORTED: 2015-04-15

		SAMPLE DESCRIPTION:		TW2	TW5	TW6	PW2	OW1
		SAMPLE TYPE:		Water	Water	Water	Water	Water
		DATE SAMPLED:		4/7/2015	4/7/2015	4/7/2015	4/7/2015	4/7/2015
Parameter	Unit	G / S	RDL	6430142	6430199	6430206	6430214	6430223
Electrical Conductivity	uS/cm		2	478	592	602	595	601
pH	pH Units		NA	7.89	7.90	8.14	7.92	8.10
Saturation pH				7.15	7.02	7.02	7.00	6.98
Langelier Index				0.74	0.88	1.12	0.92	1.12
Total Hardness (as CaCO3)	mg/L		0.5	224	285	283	281	265
Total Dissolved Solids	mg/L		20	262	302	314	304	294
Alkalinity (as CaCO3)	mg/L		5	212	244	245	259	265
Bicarbonate (as CaCO3)	mg/L		5	212	244	245	259	265
Carbonate (as CaCO3)	mg/L		5	<5	<5	<5	<5	<5
Hydroxide (as CaCO3)	mg/L		5	<5	<5	<5	<5	<5
Fluoride	mg/L		0.05	<0.05	<0.05	<0.05	<0.05	<0.05
Chloride	mg/L		0.10	18.8	19.8	24.3	22.3	3.48
Nitrate as N	mg/L		0.05	0.84	6.31	7.80	3.44	0.85
Nitrite as N	mg/L		0.05	<0.05	<0.05	<0.05	<0.05	<0.05
Bromide	mg/L		0.05	<0.05	<0.05	<0.05	<0.05	<0.05
Sulphate	mg/L		0.10	9.96	14.5	15.3	18.2	14.0
Ortho Phosphate as P	mg/L		0.10	0.35	<0.10	<0.10	<0.10	<0.10
Reactive Silica	mg/L		0.05	5.78	6.79	6.87	7.52	5.38
Ammonia as N	mg/L		0.02	<0.02	<0.02	<0.02	0.30	0.08
Total Phosphorus	mg/L		0.05	<0.05	<0.05	<0.05	<0.05	0.17
Total Organic Carbon	mg/L		0.5	1.7	0.6	0.6	0.5	2.0
Colour	TCU		5	<5	<5	<5	<5	<5
Turbidity	NTU		0.5	2.7	1.5	6.8	4.6	269
Calcium	mg/L		0.05	60.9	80.2	79.7	73.6	71.9
Magnesium	mg/L		0.05	17.5	20.5	20.3	23.5	20.7
Sodium	mg/L		0.05	6.79	7.24	8.54	8.20	7.68
Potassium	mg/L		0.05	1.53	1.02	0.98	0.90	2.16
Aluminum	mg/L		0.004	<0.004	<0.004	<0.004	<0.004	<0.004
Antimony	mg/L		0.003	<0.003	<0.003	<0.003	<0.003	<0.003
Arsenic	mg/L		0.003	<0.003	<0.003	<0.003	<0.003	<0.003

Certified By:

Results relate only to the items tested and to all the items tested

TOWN OF CALEDON
PLANNING
RECEIVED

Jul 12, 2021

AGAT Laboratories

5835 COOPERS AVENUE
MISSISSAUGA, ONTARIO
CANADA L4Z 1Y2
TEL (905)712-5100
FAX (905)712-5122
http://www.agatlabs.com

Certificate of Analysis

AGAT WORK ORDER: 15W960815

PROJECT: 300033273

CLIENT NAME: R.J. BURNSIDE & ASSOCIATES LTD

ATTENTION TO: Dwight Smikle

SAMPLING SITE:

SAMPLED BY:

Water Quality Assessment - Groundwater Samples

DATE RECEIVED: 2015-04-08

DATE REPORTED: 2015-04-15

		SAMPLE DESCRIPTION:		TW2	TW5	TW6	PW2	OW1
		SAMPLE TYPE:		Water	Water	Water	Water	Water
		DATE SAMPLED:		4/7/2015	4/7/2015	4/7/2015	4/7/2015	4/7/2015
Parameter	Unit	G / S	RDL	6430142	6430199	6430206	6430214	6430223
Barium	mg/L		0.002	0.042	0.110	0.088	0.056	0.048
Beryllium	mg/L		0.001	<0.001	<0.001	<0.001	<0.001	<0.001
Boron	mg/L		0.010	0.010	0.011	<0.010	<0.010	<0.010
Cadmium	mg/L		0.001	<0.001	<0.001	<0.001	<0.001	<0.001
Chromium	mg/L		0.003	0.005	0.004	0.008	0.005	<0.003
Cobalt	mg/L		0.001	<0.001	<0.001	<0.001	<0.001	<0.001
Copper	mg/L		0.003	<0.003	<0.003	<0.003	<0.003	<0.003
Iron	mg/L		0.010	<0.010	<0.010	<0.010	<0.010	<0.010
Lead	mg/L		0.002	<0.002	<0.002	<0.002	<0.002	<0.002
Manganese	mg/L		0.002	<0.002	<0.002	<0.002	<0.002	<0.002
Mercury	mg/L		0.0001	<0.0001	<0.0001	<0.0001	<0.0001	<0.0001
Molybdenum	mg/L		0.002	<0.002	<0.002	<0.002	<0.002	<0.002
Nickel	mg/L		0.003	<0.003	<0.003	<0.003	<0.003	<0.003
Selenium	mg/L		0.004	<0.004	<0.004	<0.004	<0.004	<0.004
Silver	mg/L		0.002	<0.002	<0.002	<0.002	<0.002	<0.002
Strontium	mg/L		0.005	0.087	0.154	0.139	0.126	0.102
Thallium	mg/L		0.006	<0.006	<0.006	<0.006	<0.006	<0.006
Tin	mg/L		0.002	<0.002	<0.002	<0.002	<0.002	<0.002
Titanium	mg/L		0.002	<0.002	<0.002	<0.002	<0.002	<0.002
Tungsten	mg/L		0.010	<0.010	<0.010	<0.010	<0.010	<0.010
Uranium	mg/L		0.002	<0.002	<0.002	<0.002	<0.002	<0.002
Vanadium	mg/L		0.002	<0.002	<0.002	0.003	<0.002	<0.002
Zinc	mg/L		0.005	0.012	0.019	0.014	0.022	0.017
Zirconium	mg/L		0.004	<0.004	<0.004	<0.004	<0.004	<0.004
% Difference/ Ion Balance			0.1	2.3	1.3	3.3	3.4	0.6

Comments: RDL - Reported Detection Limit; G / S - Guideline / Standard

Certified By:

Results relate only to the items tested and to all the items tested

TOWN OF CALEDON
PLANNING
RECEIVED
Jul 12, 2021

AGAT Laboratories

5835 COOPERS AVENUE
MISSISSAUGA, ONTARIO
CANADA L4Z 1Y2
TEL (905)712-5100
FAX (905)712-5122
http://www.agatlabs.com

Quality Assurance

CLIENT NAME: R.J. BURNSIDE & ASSOCIATES LTD

AGAT WORK ORDER: 15W960815

PROJECT: 300033273

ATTENTION TO: Dwight Smikle

SAMPLING SITE:

SAMPLED BY:

Water Analysis

RPT Date: Apr 15, 2015			DUPLICATE				REFERENCE MATERIAL			METHOD BLANK SPIKE			MATRIX SPIKE		
PARAMETER	Batch	Sample Id	Dup #1	Dup #2	RPD	Method Blank	Measured Value	Acceptable Limits		Recovery	Acceptable Limits		Recovery	Acceptable Limits	
								Lower	Upper		Lower	Upper		Lower	Upper
Water Quality Assessment - Groundwater Samples															
Electrical Conductivity	6428305		6200	6200	0.0%	< 2	95%	80%	120%	NA			NA		
pH	6428305		7.71	7.43	3.7%	NA	100%	90%	110%	NA			NA		
Total Dissolved Solids	6430142	6430142	262	262	0.0%	< 20	96%	80%	120%	NA			NA		
Alkalinity (as CaCO3)	6428305		518	524	1.2%	< 5	99%	80%	120%	NA			NA		
Bicarbonate (as CaCO3)	6428305		518	524	1.2%	< 5	NA			NA			NA		
Carbonate (as CaCO3)	6428305		<5	<5	0.0%	< 5	NA			NA			NA		
Hydroxide (as CaCO3)	6428305		<5	<5	0.0%	< 5	NA			NA			NA		
Fluoride	6430050		<0.25	<0.25	0.0%	< 0.05	108%	90%	110%	104%	90%	110%	99%	80%	120%
Chloride	6430050		172	167	2.9%	< 0.10	101%	90%	110%	105%	90%	110%	102%	80%	120%
Nitrate as N	6430050		<0.25	<0.25	0.0%	< 0.05	92%	90%	110%	102%	90%	110%	105%	80%	120%
Nitrite as N	6430050		<0.25	<0.25	0.0%	< 0.05	NA	90%	110%	98%	90%	110%	92%	80%	120%
Bromide	6430050		<0.25	<0.25	0.0%	< 0.05	110%	90%	110%	100%	90%	110%	100%	80%	120%
Sulphate	6430050		133	129	3.1%	< 0.10	99%	90%	110%	101%	90%	110%	102%	80%	120%
Ortho Phosphate as P	6430050		<0.50	<0.50	0.0%	< 0.10	104%	90%	110%	95%	90%	110%	102%	80%	120%
Reactive Silica	6432724		12.2	12.2	0.0%	< 0.05	96%	90%	110%	97%	90%	110%	96%	80%	120%
Ammonia as N	6429741		0.25	0.23	8.3%	< 0.02	107%	90%	110%	99%	90%	110%	104%	80%	120%
Total Phosphorus	6430142	6430142	< 0.05	<0.05	0.0%	< 0.05	100%	80%	120%	95%	90%	110%	102%	70%	130%
Total Organic Carbon	6430142	6430142	1.7	1.8	5.7%	< 0.5	95%	90%	110%	102%	90%	110%	94%	80%	120%
Colour	6430142	6430142	< 5	<5	0.0%	< 5	103%	90%	110%	NA			NA		
Turbidity	6430199	6430199	1.5	1.4	6.9%	< 0.5	106%	90%	110%	NA			NA		
Calcium	6430214	6430214	73.6	73.5	0.1%	< 0.05	100%	90%	110%	98%	90%	110%	93%	70%	130%
Magnesium	6430214	6430214	23.5	23.6	0.4%	< 0.05	97%	90%	110%	94%	90%	110%	93%	70%	130%
Sodium	6430214	6430214	8.20	8.23	0.4%	< 0.05	99%	90%	110%	97%	90%	110%	94%	70%	130%
Potassium	6430214	6430214	0.90	0.90	0.0%	< 0.05	101%	90%	110%	99%	90%	110%	99%	70%	130%
Aluminum	6430223	6430223	< 0.004	< 0.004	0.0%	< 0.004	105%	90%	110%	107%	90%	110%	107%	70%	130%
Antimony	6430223	6430223	< 0.003	< 0.003	0.0%	< 0.003	96%	90%	110%	100%	90%	110%	96%	70%	130%
Arsenic	6430223	6430223	< 0.003	< 0.003	0.0%	< 0.003	101%	90%	110%	100%	90%	110%	98%	70%	130%
Barium	6430223	6430223	0.048	0.048	0.0%	< 0.002	98%	90%	110%	102%	90%	110%	104%	70%	130%
Beryllium	6430223	6430223	< 0.001	< 0.001	0.0%	< 0.001	97%	90%	110%	97%	90%	110%	116%	70%	130%
Boron	6430223	6430223	< 0.010	0.010	10.5%	< 0.010	97%	90%	110%	110%	90%	110%	109%	70%	130%
Cadmium	6430223	6430223	< 0.001	< 0.001	0.0%	< 0.001	101%	90%	110%	104%	90%	110%	104%	70%	130%
Chromium	6430223	6430223	< 0.003	<0.003	0.0%	< 0.003	101%	90%	110%	107%	90%	110%	101%	70%	130%
Cobalt	6430223	6430223	< 0.001	< 0.001	0.0%	< 0.001	98%	90%	110%	100%	90%	110%	101%	70%	130%
Copper	6430223	6430223	< 0.003	< 0.003	0.0%	< 0.003	99%	90%	110%	98%	90%	110%	98%	70%	130%
Iron	6430223	6430223	< 0.010	<0.010	0.0%	< 0.010	93%	90%	110%	110%	90%	110%	92%	70%	130%
Lead	6430223	6430223	< 0.002	< 0.002	0.0%	< 0.002	103%	90%	110%	107%	90%	110%	104%	70%	130%
Manganese	6430223	6430223	< 0.002	< 0.002	0.0%	< 0.002	105%	90%	110%	109%	90%	110%	99%	70%	130%
Mercury	6430142	6430142	< 0.0001	< 0.0001	0.0%	< 0.0001	100%	90%	110%	103%	90%	110%	107%	80%	120%
Molybdenum	6430223	6430223	< 0.002	< 0.002	0.0%	< 0.002	97%	90%	110%	100%	90%	110%	100%	70%	130%

AGAT Laboratories is accredited to ISO/IEC 17025 by the Canadian Association for Laboratory Accreditation Inc. (CALA) and/or Standards Council of Canada (SCC) for specific tests listed on the scope of accreditation. AGAT Laboratories (Mississauga) is also accredited by the Canadian Association for Laboratory Accreditation Inc. (CALA) for specific drinking water tests. Accreditations are location and parameter specific. A complete listing of parameters for each location is available from www.cala.ca and/or www.scc.ca. The tests in this report may not necessarily be included in the scope of accreditation.

Results relate only to the items tested and to all the items tested

TOWN OF CALEDON
PLANNING
RECEIVED
Jul 12, 2021

AGAT Laboratories
5835 COOPERS AVENUE
MISSISSAUGA, ONTARIO
CANADA L4Z 1Y2
TEL (905)712-5100
FAX (905)712-5122
http://www.agatlabs.com

Quality Assurance

CLIENT NAME: R.J. BURNSIDE & ASSOCIATES LTD
AGAT WORK ORDER: 15W960815
PROJECT: 300033273
ATTENTION TO: Dwight Smikle
SAMPLING SITE:
SAMPLED BY:

Water Analysis (Continued)

RPT Date: Apr 15, 2015			DUPLICATE				REFERENCE MATERIAL			METHOD BLANK SPIKE			MATRIX SPIKE		
PARAMETER	Batch	Sample Id	Dup #1	Dup #2	RPD	Method Blank	Measured Value	Acceptable Limits		Recovery	Acceptable Limits		Recovery	Acceptable Limits	
								Lower	Upper		Lower	Upper		Lower	Upper
Nickel	6430223	6430223	< 0.003	< 0.003	0.0%	< 0.003	103%	90%	110%	101%	90%	110%	100%	70%	130%
Selenium	6430223	6430223	< 0.004	< 0.004	0.0%	< 0.004	100%	90%	110%	104%	90%	110%	96%	70%	130%
Silver	6430223	6430223	< 0.002	< 0.002	0.0%	< 0.002	101%	90%	110%	110%	90%	110%	101%	70%	130%
Strontium	6430223	6430223	0.102	0.097	5.0%	< 0.005	101%	90%	110%	107%	90%	110%	103%	70%	130%
Thallium	6430223	6430223	< 0.006	< 0.006	0.0%	< 0.006	100%	90%	110%	105%	90%	110%	101%	70%	130%
Tin	6430223	6430223	< 0.002	< 0.002	0.0%	< 0.002	93%	90%	110%	102%	90%	110%	97%	70%	130%
Titanium	6430223	6430223	< 0.002	< 0.002	0.0%	< 0.002	98%	90%	110%	103%	90%	110%	99%	70%	130%
Tungsten	6430223	6430223	< 0.010	< 0.010	0.0%	< 0.010	97%	90%	110%	105%	90%	110%	101%	70%	130%
Uranium	6430223	6430223	< 0.002	< 0.002	0.0%	< 0.002	97%	90%	110%	108%	90%	110%	102%	70%	130%
Vanadium	6430223	6430223	0.003	0.003	0.0%	< 0.002	101%	90%	110%	105%	90%	110%	99%	70%	130%
Zinc	6430223	6430223	0.017	0.016	6.1%	< 0.005	102%	90%	110%	107%	90%	110%	101%	70%	130%
Zirconium	6430223	6430223	< 0.004	< 0.004	0.0%	< 0.004	100%	90%	110%	102%	90%	110%	100%	70%	130%

Comments: NA signifies Not Applicable

Certified By:

AGAT Laboratories is accredited to ISO/IEC 17025 by the Canadian Association for Laboratory Accreditation Inc. (CALA) and/or Standards Council of Canada (SCC) for specific tests listed on the scope of accreditation. AGAT Laboratories (Mississauga) is also accredited by the Canadian Association for Laboratory Accreditation Inc. (CALA) for specific drinking water tests. Accreditations are location and parameter specific. A complete listing of parameters for each location is available from www.cala.ca and/or www.scc.ca. The tests in this report may not necessarily be included in the scope of accreditation.

Results relate only to the items tested and to all the items tested

TOWN OF CALEDON
PLANNING
RECEIVED
Jul 12, 2021

AGAT Laboratories

5835 COOPERS AVENUE
MISSISSAUGA, ONTARIO
CANADA L4Z 1Y2
TEL (905)712-5100
FAX (905)712-5122
http://www.agatlabs.com

Method Summary

CLIENT NAME: R.J. BURNSIDE & ASSOCIATES LTD

AGAT WORK ORDER: 15W960815

PROJECT: 300033273

ATTENTION TO: Dwight Smikle

SAMPLING SITE:

SAMPLED BY:

PARAMETER	AGAT S.O.P	LITERATURE REFERENCE	ANALYTICAL TECHNIQUE
Water Analysis			
Electrical Conductivity	INOR-93-6000	SM 2510 B	PC TITRATE
pH	INOR-93-6000	SM 4500-H+ B	PC TITRATE
Saturation pH		SM 2320 B	CALCULATION
Langelier Index		SM 2330B	CALCULATION
Total Hardness (as CaCO3)	MET-93-6105	EPA SW-846 6010C & 200.7	ICP/OES
Total Dissolved Solids	INOR-93-6028	SM 2540 C	BALANCE
Alkalinity (as CaCO3)	INOR-93-6000	SM 2320 B	PC TITRATE
Bicarbonate (as CaCO3)	INOR-93-6000	SM 2320 B	PC TITRATE
Carbonate (as CaCO3)	INOR-93-6000	SM 2320 B	PC TITRATE
Hydroxide (as CaCO3)	INOR-93-6000	SM 2320 B	PC TITRATE
Fluoride	INOR-93-6004	SM 4110 B	ION CHROMATOGRAPH
Chloride	INOR-93-6004	SM 4110 B	ION CHROMATOGRAPH
Nitrate as N	INOR-93-6004	SM 4110 B	ION CHROMATOGRAPH
Nitrite as N	INOR-93-6004	SM 4110 B	ION CHROMATOGRAPH
Bromide	INOR-93-6004	SM 4110 B	ION CHROMATOGRAPH
Sulphate	INOR-93-6004	SM 4110 B	ION CHROMATOGRAPH
Ortho Phosphate as P	INOR-93-6004	SM 4110 B	ION CHROMATOGRAPH
Reactive Silica	INOR-93-6047	AQ2 EPA-122A & SM 4500 SiO2 D	AQ2 DISCRETE ANALYSER
Ammonia as N	INOR-93-6002	AQ2 EPA-103A & SM 4500 NH3-F	AQ-2 DISCRETE ANALYZER
Total Phosphorus	INOR-93-6057	QuikChem 10-115-01-3-A & SM 4500-P I	LACHAT FIA
Total Organic Carbon	INOR-93-6049	EPA 415.1 & SM 5310	SHIMADZU CARBON ANALYZER
Colour	INOR-93-6046	SM 2120 B	SPECTROPHOTOMETER
Turbidity	INOR-93-6044	SM 2130 B	NEPHELOMETER
Calcium	MET-93-6105	EPA SW-846 6010C & 200.7	ICP/OES
Magnesium	MET-93-6105	EPA SW-846 6010C & 200.7	ICP/OES
Sodium	MET-93-6105	EPA SW-846 6010C & 200.7	ICP/OES
Potassium	MET-93-6105	EPA SW-846 6010C & 200.7	ICP/OES
Aluminum	MET-93-6103	EPA SW-846 6020A & 200.8	ICP-MS
Antimony	MET-93-6103	EPA SW-846 6020A & 200.8	ICP-MS
Arsenic	MET-93-6103	EPA SW-846 6020A & 200.8	ICP-MS
Barium	MET-93-6103	EPA SW-846 6020A & 200.8	ICP-MS
Beryllium	MET-93-6103	EPA SW-846 6020A & 200.8	ICP-MS
Boron	MET-93-6103	EPA SW-846 6020A & 200.8	ICP-MS
Cadmium	MET-93-6103	EPA SW-846 6020A & 200.8	ICP-MS
Chromium	MET-93-6103	EPA SW-846 6020A & 200.8	ICP-MS
Cobalt	MET-93-6103	EPA SW-846 6020A & 200.8	ICP-MS
Copper	MET-93-6103	EPA SW-846 6020A & 200.8	ICP-MS
Iron	MET-93-6103	EPA SW-846 6020A & 200.8	ICP-MS
Lead	MET-93-6103	EPA SW-846 6020A & 200.8	ICP-MS
Manganese	MET-93-6103	EPA SW-846 6020A & 200.8	ICP-MS
Mercury	MET-93-6100	EPA SW 846 7470 & 245.1	CVAAS
Molybdenum	MET-93-6103	EPA SW-846 6020A & 200.8	ICP-MS
Nickel	MET-93-6103	EPA SW-846 6020A & 200.8	ICP-MS
Selenium	MET-93-6103	EPA SW-846 6020A & 200.8	ICP-MS
Silver	MET-93-6103	EPA SW-846 6020A & 200.8	ICP-MS
Strontium	MET-93-6103	EPA SW-846 6020A & 200.8	ICP-MS
Thallium	MET-93-6103	EPA SW-846 6020A & 200.8	ICP-MS
Tin	MET-93-6103	EPA SW-846 6020A & 200.8	ICP-MS

Results relate only to the items tested and to all the items tested

TOWN OF CALEDON
PLANNING
RECEIVED
Jul 12, 2021

AGAT Laboratories

5835 COOPERS AVENUE
MISSISSAUGA, ONTARIO
CANADA L4Z 1Y2
TEL (905)712-5100
FAX (905)712-5122
http://www.agatlabs.com

Method Summary

CLIENT NAME: R.J. BURNSIDE & ASSOCIATES LTD

AGAT WORK ORDER: 15W960815

PROJECT: 300033273

ATTENTION TO: Dwight Smikle

SAMPLING SITE:

SAMPLED BY:

PARAMETER	AGAT S.O.P	LITERATURE REFERENCE	ANALYTICAL TECHNIQUE
Titanium	MET-93-6103	EPA SW-846 6020A & 200.8	ICP-MS
Tungsten	MET-93-6103	EPA SW-846 6020A & 200.8	ICP-MS
Uranium	MET-93-6103	EPA SW-846 6020A & 200.8	ICP-MS
Vanadium	MET-93-6103	EPA SW-846 6020A & 200.8	ICP-MS
Zinc	MET-93-6103	EPA SW-846 6020A & 200.8	ICP-MS
Zirconium	MET-93-6103	EPA SW-846 6020A & 200.8	ICP-MS
% Difference/ Ion Balance		SM 1030 E	CALCULATION

Results relate only to the items tested and to all the items tested

AGAT Laboratories

2.0/2.1/2.0

5835 Coopers Avenue
Mississauga, ON
L4Z 1Y2
www.agatlabs.com · webearth.agatlabs.com
P: 905.712.5100 · F: 905.712.5122

Chain of Custody Record

Laboratory Use Only

Arrival Temperature:
AGAT WO #: 15W960815
Lab Temperature: 26/1.8/2.2
Notes: on ice

Client Information

Company: BURNSIDE
Contact: Dwight Smikle
Address: 292 Speedvale Ave
Guelph, ON
Phone: 823-4995 Fax:
Project: 300033273 PO:
AGAT Quotation #:

Please note, if quotation number is not provided, client will be billed full price for analysis.

Regulatory Requirements

☐ Regulation 153/04 (reg. 511 Amend.)
Table ____ Indicate one
☐ Ind/Com
☐ Res/Park
☐ Agriculture
Soil Texture (check one)
☐ Coarse ☐ Fine

☐ Sewer Use
Region ____ Indicate one
☐ Sanitary
☐ Storm

☐ Regulation 558
☐ CCME
☐ Other (specify)
☐ Prov. Water Quality Objectives (PWQO)
☒ None

Turnaround Time Required (TAT) Required*

Regular TAT
☒ 5 to 7 Working Days

Rush TAT (please provide prior notification)
Rush Surcharges Apply
☐ 3 Working Days
☐ 2 Working Days
☐ 1 Working Day

OR
Date Required (Rush surcharges may apply):

*TAT is exclusive of weekends and statutory holidays

Invoice To

Same: Yes ☒ No ☐
Company:
Contact:
Address:

Is this a drinking water sample? (potable water intended for human consumption)
☐ Yes ☒ No
If "Yes", please use the *Drinking Water Chain of Custody Form*

Is this submission for a **Record of Site Condition**?
☐ Yes ☒ No

Legend Matrix

GW Ground Water **O** Oil
SW Surface Water **P** Paint
SD Sediment **S** Soil

Report Information – reports to be sent to:

1. Name: Dwight Smikle
   Email: Dwight.Smikle@rjburnside.com
2. Name:
   Email:

Sample Identification	Date Sampled	Time Sampled	Sample Matrix	# of Containers	Comments Site/Sample Information	Metals and Inorganics	Metal Scan	Hydride Forming Metals	Client Custom Metals	ORPs: ☐ B-HWS ☐ Cl- ☐ CN- ☐ EC ☐ FOC ☐ Cr+6- ☐ SAR ☐ NO_3/NO_2 ☐ N- Total ☐ Hg ☐ pH	Nutrients: ☐ TP ☐ NH_3 ☐ TKN ☐ NO_3 ☐ NO_2 ☐ NO_3/NO_2	VOC: ☐ VOC ☐ THM ☐ BTEX	CCME Fractions 1 to 4	ABNs	PAHs	Chlorophenols	PCBs	Organochlorine Pesticides	TCLP Metals/Inorganics	Sewer Use	WQA
TW2	7 April 15	11:00	GW	6	Metals + Mercury																✓
TW5	↓	9:30	↓	↓	field filtered																✓
TW6	↓	9:00	↓	↓	" "																✓
PW2	↓	10:15	↓	↓	" "																✓
OW1	↓	14:00	↓	↓	" "																✓

Samples Relinquished By (Print Name and Sign):	Date/Time	Samples Received By (Print Name and Sign):	Date/Time		
Sean Quinlan Sean Quinlan	8 April 15	M. Kelly Meffrakels	04-08-15 8:23 am	Pink Copy - Client	Page 1 of 1
Samples Relinquished By (Print Name and Sign):	Date/Time	Samples Received By (Print Name and Sign):	Date/Time	Yellow Copy - AGAT	
		Shazmin Apr 9/15	930am	White Copy- AGAT	Nº: 53688

TOWN OF CALEDON PLANNING RECEIVED Jul 19, 2022

TOWN OF CALEDON
PLANNING
RECEIVED
Jul 12, 2021

AGAT Laboratories

5835 COOPERS AVENUE
MISSISSAUGA, ONTARIO
CANADA L4Z 1Y2
TEL (905)712-5100
FAX (905)712-5122
http://www.agatlabs.com

CLIENT NAME: R.J. BURNSIDE & ASSOCIATES LTD
292 Speedvale Avenue West, Unit 7
Guelph, ON N1H1C4
(519) 823-4995

ATTENTION TO: Jim Baxter

PROJECT: 3000 33273

AGAT WORK ORDER: 16T069988

WATER ANALYSIS REVIEWED BY: Amanjot Bhela, Inorganic Coordinator

DATE REPORTED: Feb 22, 2016

PAGES (INCLUDING COVER): 9

VERSION*: 1

Should you require any information regarding this analysis please contact your client services representative at (905) 712-5100

*NOTES
VERSION 1:Partial Report Issued Feb 22nd 2016.

All samples will be disposed of within 30 days following analysis. Please contact the lab if you require additional sample storage time.

Member of: Association of Professional Engineers, Geologists and Geophysicists of Alberta (APEGGA)
Western Enviro-Agricultural Laboratory Association (WEALA)
Environmental Services Association of Alberta (ESAA)

AGAT Laboratories is accredited to ISO/IEC 17025 by the Canadian Association for Laboratory Accreditation Inc. (CALA) and/or Standards Council of Canada (SCC) for specific tests listed on the scope of accreditation. AGAT Laboratories (Mississauga) is also accredited by the Canadian Association for Laboratory Accreditation Inc. (CALA) for specific drinking water tests. Accreditations are location and parameter specific. A complete listing of parameters for each location is available from www.cala.ca and/or www.scc.ca. The tests in this report may not necessarily be included in the scope of accreditation.

Results relate only to the items tested and to all the items tested
All reportable information as specified by ISO 17025:2005 is available from AGAT Laboratories upon request

TOWN OF CALEDON
PLANNING
RECEIVED

Jul 12, 2021

AGAT Laboratories

5835 COOPERS AVENUE
MISSISSAUGA, ONTARIO
CANADA L4Z 1Y2
TEL (905)712-5100
FAX (905)712-5122
http://www.agatlabs.com

Certificate of Analysis

AGAT WORK ORDER: 16T069988

PROJECT: 3000 33273

CLIENT NAME: R.J. BURNSIDE & ASSOCIATES LTD

ATTENTION TO: Jim Baxter

SAMPLING SITE:

SAMPLED BY:

Nitrate (Water)

DATE RECEIVED: 2016-02-19

DATE REPORTED: 2016-02-22

			SAMPLE DESCRIPTION:	TW7 (12:50)
			SAMPLE TYPE:	Water
			DATE SAMPLED:	2/19/2016
Parameter	Unit	G / S	RDL	7395664
Nitrate as N	mg/L		0.25	8.00

Comments: RDL - Reported Detection Limit; G / S - Guideline / Standard

7395664 Elevated RDL indicates the degree of sample dilution prior to the analysis for anions in order to keep analyte within the calibration range of the instrument and to reduce matrix interference.

Certified By: Amanjot Bhela

Results relate only to the items tested and to all the items tested

TOWN OF CALEDON
PLANNING
RECEIVED
Jul 12, 2021

AGAT Laboratories

5835 COOPERS AVENUE
MISSISSAUGA, ONTARIO
CANADA L4Z 1Y2
TEL (905)712-5100
FAX (905)712-5122
http://www.agatlabs.com

Certificate of Analysis

AGAT WORK ORDER: 16T069988
PROJECT: 3000 33273

CLIENT NAME: R.J. BURNSIDE & ASSOCIATES LTD
ATTENTION TO: Jim Baxter
SAMPLING SITE:
SAMPLED BY:

Water Quality Assessment (mg/L)

DATE RECEIVED: 2016-02-19
DATE REPORTED: 2016-02-22

		SAMPLE DESCRIPTION:		TW7
		SAMPLE TYPE:		Water
		DATE SAMPLED:		2/19/2016
Parameter	Unit	G / S	RDL	7395659
Electrical Conductivity	uS/cm		2	587
pH	pH Units		NA	7.88
Saturation pH				6.99
Langelier Index				0.89
Total Hardness (as CaCO3)	mg/L		0.5	280
Total Dissolved Solids	mg/L		20	354
Alkalinity (as CaCO3)	mg/L		5	262
Bicarbonate (as CaCO3)	mg/L		5	262
Carbonate (as CaCO3)	mg/L		5	<5
Hydroxide (as CaCO3)	mg/L		5	<5
Fluoride	mg/L		0.25	<0.25
Chloride	mg/L		0.50	18.3
Nitrate as N	mg/L		0.25	8.52
Nitrite as N	mg/L		0.25	<0.25
Bromide	mg/L		0.25	<0.25
Sulphate	mg/L		0.50	20.6
Ortho Phosphate as P	mg/L		0.50	<0.50
Reactive Silica	mg/L		0.05	
Ammonia as N	mg/L		0.02	
Total Phosphorus	mg/L		0.05	<0.05
Total Organic Carbon	mg/L		0.5	0.6
Colour	TCU		5	<5
Turbidity	NTU		0.5	3.9
Calcium	mg/L		0.05	77.2
Magnesium	mg/L		0.05	21.2
Sodium	mg/L		0.05	5.60
Potassium	mg/L		0.05	1.00
Aluminum	mg/L		0.004	< 0.004
Antimony	mg/L		0.003	<0.003
Arsenic	mg/L		0.003	<0.003

Certified By: Amanjot Bhela

Results relate only to the items tested and to all the items tested

TOWN OF CALEDON
PLANNING
RECEIVED
Jul 12, 2021

AGAT Laboratories

Certificate of Analysis

AGAT WORK ORDER: 16T069988

PROJECT: 3000 33273

5835 COOPERS AVENUE
MISSISSAUGA, ONTARIO
CANADA L4Z 1Y2
TEL (905)712-5100
FAX (905)712-5122
http://www.agatlabs.com

CLIENT NAME: R.J. BURNSIDE & ASSOCIATES LTD

ATTENTION TO: Jim Baxter

SAMPLING SITE:

SAMPLED BY:

Water Quality Assessment (mg/L)

DATE RECEIVED: 2016-02-19

DATE REPORTED: 2016-02-22

		SAMPLE DESCRIPTION:		TW7
		SAMPLE TYPE:		Water
		DATE SAMPLED:		2/19/2016
Parameter	Unit	G / S	RDL	7395659
Barium	mg/L		0.002	0.093
Beryllium	mg/L		0.001	<0.001
Boron	mg/L		0.010	<0.010
Cadmium	mg/L		0.001	<0.001
Chromium	mg/L		0.003	<0.003
Cobalt	mg/L		0.001	<0.001
Copper	mg/L		0.003	<0.003
Iron	mg/L		0.010	<0.010
Lead	mg/L		0.002	<0.002
Manganese	mg/L		0.002	<0.002
Mercury	mg/L		0.0001	<0.0001
Molybdenum	mg/L		0.002	<0.002
Nickel	mg/L		0.003	<0.003
Selenium	mg/L		0.004	<0.004
Silver	mg/L		0.002	<0.002
Strontium	mg/L		0.005	0.106
Thallium	mg/L		0.006	<0.006
Tin	mg/L		0.002	<0.002
Titanium	mg/L		0.002	<0.002
Tungsten	mg/L		0.010	<0.010
Uranium	mg/L		0.002	<0.002
Vanadium	mg/L		0.002	<0.002
Zinc	mg/L		0.005	0.017
Zirconium	mg/L		0.004	<0.004
% Difference/ Ion Balance	%		NA	7.32

Comments: RDL - Reported Detection Limit; G / S - Guideline / Standard

7395659 Elevated RDL indicates the degree of sample dilution prior to the analysis for anions in order to keep analyte within the calibration range of the instrument and to reduce matrix interference.

Certified By: Amanjot Bhela

Results relate only to the items tested and to all the items tested

TOWN OF CALEDON
PLANNING
RECEIVED
Jul 12, 2021

AGAT Laboratories

5835 COOPERS AVENUE
MISSISSAUGA, ONTARIO
CANADA L4Z 1Y2
TEL (905)712-5100
FAX (905)712-5122
http://www.agatlabs.com

Quality Assurance

CLIENT NAME: R.J. BURNSIDE & ASSOCIATES LTD

AGAT WORK ORDER: 16T069988

PROJECT: 3000 33273

ATTENTION TO: Jim Baxter

SAMPLING SITE:

SAMPLED BY:

Water Analysis

RPT Date: Feb 22, 2016

PARAMETER	Batch	Sample Id	DUPLICATE Dup #1	DUPLICATE Dup #2	DUPLICATE RPD	Method Blank	REFERENCE MATERIAL Measured Value	REFERENCE MATERIAL Acceptable Limits Lower	REFERENCE MATERIAL Acceptable Limits Upper	METHOD BLANK SPIKE Recovery	METHOD BLANK SPIKE Acceptable Limits Lower	METHOD BLANK SPIKE Acceptable Limits Upper	MATRIX SPIKE Recovery	MATRIX SPIKE Acceptable Limits Lower	MATRIX SPIKE Acceptable Limits Upper
Water Quality Assessment (mg/L)															
Electrical Conductivity	7397209		1320	1320	0.0%	< 2	98%	80%	120%	NA			NA		
pH	7397209		8.11	8.02	1.1%	NA	99%	90%	110%	NA			NA		
Total Dissolved Solids	7393504		552	562	1.8%	< 20	96%	80%	120%	NA			NA		
Alkalinity (as CaCO3)	7397209		336	337	0.3%	< 5	102%	80%	120%	NA			NA		
Bicarbonate (as CaCO3)	7397209		336	337	0.3%	< 5	NA			NA			NA		
Carbonate (as CaCO3)	7397209		<5	<5	NA	< 5	NA			NA			NA		
Hydroxide (as CaCO3)	7397209		<5	<5	NA	< 5	NA			NA			NA		
Fluoride	7395664	7395664	<0.25	<0.25	NA	< 0.05	99%	90%	110%	93%	90%	110%	89%	80%	120%
Chloride	7395664	7395664	16.8	16.8	0.0%	< 0.10	105%	90%	110%	98%	90%	110%	96%	80%	120%
Nitrate as N	7395664	7395664	8.00	7.88	1.5%	< 0.05	98%	90%	110%	101%	90%	110%	113%	80%	120%
Nitrite as N	7395664	7395664	<0.25	<0.25	NA	< 0.05	NA	90%	110%	98%	90%	110%	113%	80%	120%
Bromide	7395664	7395664	<0.25	<0.25	NA	< 0.05	108%	90%	110%	104%	90%	110%	112%	80%	120%
Sulphate	7395664	7395664	18.9	18.4	2.7%	< 0.10	104%	90%	110%	95%	90%	110%	102%	80%	120%
Ortho Phosphate as P	7395664	7395664	<0.50	<0.50	NA	< 0.10	95%	90%	110%	90%	90%	110%	92%	80%	120%
Total Phosphorus	7396488		<0.05	<0.05	NA	< 0.05	102%	80%	120%	95%	90%	110%	102%	70%	130%
Total Organic Carbon	7396282		<0.5	<0.5	NA	< 0.5	96%	90%	110%	103%	90%	110%	99%	80%	120%
Colour	7396488		<5	<5	NA	< 5	102%	90%	110%	NA			NA		
Turbidity	7396488		<0.5	<0.5	NA	< 0.5	100%	90%	110%	NA			NA		
Calcium	7395659	7395659	77.2	76.9	0.4%	< 0.05	105%	90%	110%	104%	90%	110%	89%	70%	130%
Magnesium	7395659	7395659	21.2	21.6	1.9%	< 0.05	98%	90%	110%	98%	90%	110%	86%	70%	130%
Sodium	7395659	7395659	5.60	5.64	0.7%	< 0.05	101%	90%	110%	102%	90%	110%	95%	70%	130%
Potassium	7395659	7395659	1.00	1.02	2.0%	< 0.05	101%	90%	110%	102%	90%	110%	106%	70%	130%
Antimony	7394156		< 0.003	< 0.003	NA	< 0.003	94%	90%	110%	92%	90%	110%	97%	70%	130%
Arsenic	7394156		< 0.003	< 0.003	NA	< 0.003	98%	90%	110%	96%	90%	110%	114%	70%	130%
Barium	7394156		0.453	0.447	1.3%	< 0.002	96%	90%	110%	97%	90%	110%	92%	70%	130%
Beryllium	7394156		< 0.001	< 0.001	NA	< 0.001	91%	90%	110%	97%	90%	110%	98%	70%	130%
Boron	7394156		0.040	0.039	NA	< 0.010	100%	90%	110%	101%	90%	110%	106%	70%	130%
Cadmium	7394156		< 0.001	< 0.001	NA	< 0.001	94%	90%	110%	94%	90%	110%	99%	70%	130%
Chromium	7394156		0.009	0.009	NA	< 0.003	100%	90%	110%	101%	90%	110%	104%	70%	130%
Cobalt	7394156		< 0.001	< 0.001	NA	< 0.001	101%	90%	110%	102%	90%	110%	105%	70%	130%
Copper	7394156		< 0.003	< 0.003	NA	< 0.003	99%	90%	110%	101%	90%	110%	102%	70%	130%
Iron	7394156		7.79	7.51	3.7%	< 0.010	102%	90%	110%	101%	90%	110%	110%	70%	130%
Lead	7394156		< 0.002	< 0.002	NA	< 0.002	92%	90%	110%	91%	90%	110%	91%	70%	130%
Manganese	7394156		1.35	1.35	0.0%	< 0.002	97%	90%	110%	97%	90%	110%	80%	70%	130%
Mercury	7395659	7395659	<0.0001	<0.0001	NA	< 0.0001	99%	90%	110%	98%	90%	110%	99%	80%	120%
Molybdenum	7394156		0.002	0.002	NA	< 0.002	94%	90%	110%	95%	90%	110%	101%	70%	130%
Nickel	7394156		< 0.003	< 0.003	NA	< 0.003	106%	90%	110%	106%	90%	110%	108%	70%	130%
Selenium	7394156		< 0.004	< 0.004	NA	< 0.004	102%	90%	110%	99%	90%	110%	119%	70%	130%
Silver	7394156		< 0.002	< 0.002	NA	< 0.002	95%	90%	110%	105%	90%	110%	102%	70%	130%

AGAT Laboratories is accredited to ISO/IEC 17025 by the Canadian Association for Laboratory Accreditation Inc. (CALA) and/or Standards Council of Canada (SCC) for specific tests listed on the scope of accreditation. AGAT Laboratories (Mississauga) is also accredited by the Canadian Association for Laboratory Accreditation Inc. (CALA) for specific drinking water tests. Accreditations are location and parameter specific. A complete listing of parameters for each location is available from www.cala.ca and/or www.scc.ca. The tests in this report may not necessarily be included in the scope of accreditation.

Results relate only to the items tested and to all the items tested

TOWN OF CALEDON
PLANNING
RECEIVED
Jul 12, 2021

AGAT Laboratories
5835 COOPERS AVENUE
MISSISSAUGA, ONTARIO
CANADA L4Z 1Y2
TEL (905)712-5100
FAX (905)712-5122
http://www.agatlabs.com

Quality Assurance

CLIENT NAME: R.J. BURNSIDE & ASSOCIATES LTD
AGAT WORK ORDER: 16T069988
PROJECT: 3000 33273
ATTENTION TO: Jim Baxter
SAMPLING SITE:
SAMPLED BY:

Water Analysis (Continued)

RPT Date: Feb 22, 2016			DUPLICATE				REFERENCE MATERIAL			METHOD BLANK SPIKE			MATRIX SPIKE		
PARAMETER	Batch	Sample Id	Dup #1	Dup #2	RPD	Method Blank	Measured Value	Acceptable Limits		Recovery	Acceptable Limits		Recovery	Acceptable Limits	
								Lower	Upper		Lower	Upper		Lower	Upper
Strontium	7394156		0.496	0.488	1.6%	< 0.005	94%	90%	110%	96%	90%	110%	95%	70%	130%
Thallium	7394156		< 0.006	< 0.006	NA	< 0.006	100%	90%	110%	100%	90%	110%	101%	70%	130%
Tin	7394156		< 0.002	< 0.002	NA	< 0.002	97%	90%	110%	92%	90%	110%	98%	70%	130%
Titanium	7394156		0.002	0.003	NA	< 0.002	97%	90%	110%	96%	90%	110%	104%	70%	130%
Tungsten	7394156		< 0.010	< 0.010	NA	< 0.010	96%	90%	110%	90%	90%	110%	101%	70%	130%
Uranium	7394156		< 0.002	< 0.002	NA	< 0.002	97%	90%	110%	91%	90%	110%	97%	70%	130%
Vanadium	7394156		< 0.002	< 0.002	NA	< 0.002	91%	90%	110%	95%	90%	110%	101%	70%	130%
Zinc	7394156		< 0.005	< 0.005	NA	< 0.005	97%	90%	110%	98%	90%	110%	101%	70%	130%
Zirconium	7394156		< 0.004	< 0.004	NA	< 0.004	101%	90%	110%	97%	90%	110%	108%	70%	130%

Comments: NA signifies Not Applicable.
Duplicate Qualifier: As the measured result approaches the RL, the uncertainty associated with the value increases dramatically, thus duplicate acceptance limits apply only where the average of the two duplicates is greater than five times the RL.

Certified By: Amanjot Bhela

AGAT Laboratories is accredited to ISO/IEC 17025 by the Canadian Association for Laboratory Accreditation Inc. (CALA) and/or Standards Council of Canada (SCC) for specific tests listed on the scope of accreditation. AGAT Laboratories (Mississauga) is also accredited by the Canadian Association for Laboratory Accreditation Inc. (CALA) for specific drinking water tests. Accreditations are location and parameter specific. A complete listing of parameters for each location is available from www.cala.ca and/or www.scc.ca. The tests in this report may not necessarily be included in the scope of accreditation.

Results relate only to the items tested and to all the items tested

TOWN OF CALEDON
PLANNING
RECEIVED
Jul 12, 2021

AGAT Laboratories
5835 COOPERS AVENUE
MISSISSAUGA, ONTARIO
CANADA L4Z 1Y2
TEL (905)712-5100
FAX (905)712-5122
http://www.agatlabs.com

Method Summary

CLIENT NAME: R.J. BURNSIDE & ASSOCIATES LTD

AGAT WORK ORDER: 16T069988

PROJECT: 3000 33273

ATTENTION TO: Jim Baxter

SAMPLING SITE:

SAMPLED BY:

PARAMETER	AGAT S.O.P	LITERATURE REFERENCE	ANALYTICAL TECHNIQUE
Water Analysis			
Nitrate as N	INOR-93-6004	SM 4110 B	ION CHROMATOGRAPH
Electrical Conductivity	INOR-93-6000	SM 2510 B	PC TITRATE
pH	INOR-93-6000	SM 4500-H+ B	PC TITRATE
Saturation pH		SM 2320 B	CALCULATION
Langelier Index		SM 2330B	CALCULATION
Total Hardness (as CaCO3)	MET-93-6105	EPA SW-846 6010C & 200.7	ICP/OES
Total Dissolved Solids	INOR-93-6028	SM 2540 C	BALANCE
Alkalinity (as CaCO3)	INOR-93-6000	SM 2320 B	PC TITRATE
Bicarbonate (as CaCO3)	INOR-93-6000	SM 2320 B	PC TITRATE
Carbonate (as CaCO3)	INOR-93-6000	SM 2320 B	PC TITRATE
Hydroxide (as CaCO3)	INOR-93-6000	SM 2320 B	PC TITRATE
Fluoride	INOR-93-6004	SM 4110 B	ION CHROMATOGRAPH
Chloride	INOR-93-6004	SM 4110 B	ION CHROMATOGRAPH
Nitrite as N	INOR-93-6004	SM 4110 B	ION CHROMATOGRAPH
Bromide	INOR-93-6004	SM 4110 B	ION CHROMATOGRAPH
Sulphate	INOR-93-6004	SM 4110 B	ION CHROMATOGRAPH
Ortho Phosphate as P	INOR-93-6004	SM 4110 B	ION CHROMATOGRAPH
Reactive Silica	INOR-93-6047	AQ2 EPA-122A & SM 4500 SiO2 D	AQ2 DISCRETE ANALYSER
Ammonia as N	INOR-93-6059	QuikChem 10-107-06-1-J & SM 4500 NH3-F	LACHAT FIA
Total Phosphorus	INOR-93-6057	QuikChem 10-115-01-3-A & SM 4500-P I	LACHAT FIA
Total Organic Carbon	INOR-93-6049	EPA 415.1 & SM 5310	SHIMADZU CARBON ANALYZER
Colour	INOR-93-6046	SM 2120 B	SPECTROPHOTOMETER
Turbidity	INOR-93-6044	SM 2130 B	NEPHELOMETER
Calcium	MET-93-6105	EPA SW-846 6010C & 200.7	ICP/OES
Magnesium	MET-93-6105	EPA SW-846 6010C & 200.7	ICP/OES
Sodium	MET-93-6105	EPA SW-846 6010C & 200.7	ICP/OES
Potassium	MET-93-6105	EPA SW-846 6010C & 200.7	ICP/OES
Aluminum	MET-93-6103	EPA SW-846 6020A & 200.8	ICP-MS
Antimony	MET-93-6103	EPA SW-846 6020A & 200.8	ICP-MS
Arsenic	MET-93-6103	EPA SW-846 6020A & 200.8	ICP-MS
Barium	MET-93-6103	EPA SW-846 6020A & 200.8	ICP-MS
Beryllium	MET-93-6103	EPA SW-846 6020A & 200.8	ICP-MS
Boron	MET-93-6103	EPA SW-846 6020A & 200.8	ICP-MS
Cadmium	MET-93-6103	EPA SW-846 6020A & 200.8	ICP-MS
Chromium	MET-93-6103	EPA SW-846 6020A & 200.8	ICP-MS
Cobalt	MET-93-6103	EPA SW-846 6020A & 200.8	ICP-MS
Copper	MET-93-6103	EPA SW-846 6020A & 200.8	ICP-MS
Iron	MET-93-6103	EPA SW-846 6020A & 200.8	ICP-MS
Lead	MET-93-6103	EPA SW-846 6020A & 200.8	ICP-MS
Manganese	MET-93-6103	EPA SW-846 6020A & 200.8	ICP-MS
Mercury	MET-93-6100	EPA SW 846 7470 & 245.1	CVAAS
Molybdenum	MET-93-6103	EPA SW-846 6020A & 200.8	ICP-MS
Nickel	MET-93-6103	EPA SW-846 6020A & 200.8	ICP-MS
Selenium	MET-93-6103	EPA SW-846 6020A & 200.8	ICP-MS
Silver	MET-93-6103	EPA SW-846 6020A & 200.8	ICP-MS
Strontium	MET-93-6103	EPA SW-846 6020A & 200.8	ICP-MS
Thallium	MET-93-6103	EPA SW-846 6020A & 200.8	ICP-MS

Results relate only to the items tested and to all the items tested

TOWN OF CALEDON
PLANNING
RECEIVED
Jul 12, 2021

AGAT Laboratories

5835 COOPERS AVENUE
MISSISSAUGA, ONTARIO
CANADA L4Z 1Y2
TEL (905)712-5100
FAX (905)712-5122
http://www.agatlabs.com

Method Summary

CLIENT NAME: R.J. BURNSIDE & ASSOCIATES LTD

AGAT WORK ORDER: 16T069988

PROJECT: 3000 33273

ATTENTION TO: Jim Baxter

SAMPLING SITE:

SAMPLED BY:

PARAMETER	AGAT S.O.P	LITERATURE REFERENCE	ANALYTICAL TECHNIQUE
Tin	MET-93-6103	EPA SW-846 6020A & 200.8	ICP-MS
Titanium	MET-93-6103	EPA SW-846 6020A & 200.8	ICP-MS
Tungsten	MET-93-6103	EPA SW-846 6020A & 200.8	ICP-MS
Uranium	MET-93-6103	EPA SW-846 6020A & 200.8	ICP-MS
Vanadium	MET-93-6103	EPA SW-846 6020A & 200.8	ICP-MS
Zinc	MET-93-6103	EPA SW-846 6020A & 200.8	ICP-MS
Zirconium	MET-93-6103	EPA SW-846 6020A & 200.8	ICP-MS
% Difference/ Ion Balance		SM 1030 E	CALCULATION

Results relate only to the items tested and to all the items tested

AGAT Laboratories

* TURBIDITY

5835 Coopers Avenue
Mississauga, Ontario L4Z 1Y2
Ph: 905.712.5100 Fax: 905.712.5122
webearth.agatlabs.com

Chain of Custody Record

If this is a Drinking Water sample, please use Drinking Water Chain of Custody Form (potable water intended for human consumption)

Laboratory Use Only

Work Order #: 16T 069 988

Cooler Quantity: 1 SMALL BLUE

Arrival Temperatures: 8.2 | 9.7 | 9.5

Custody Seal Intact: ☐ Yes ☐ No ☒ N/A

Notes: ON ICE

Report Information:

Company: RJ Burnside + Associates Ltd.

Contact: Jim Baxter

Address: # 292 Speedvale Ave. West, Unit 20, Guelph ONT N1H 1C4

Phone: Fax:

Reports to be sent to:

1. Email: Jim.Baxter@rjburnside.com
2. Email:

Regulatory Requirements: ☐ No Regulatory Requirement

(Please check all applicable boxes)

☐ Regulation 153/04 — Table ____ (Indicate One): ☐ Ind/Com ☐ Res/Park ☐ Agriculture

Soil Texture (Check One): ☐ Coarse ☐ Fine

☐ Sewer Use: ☐ Sanitary ☐ Storm — Region ____ (Indicate One)

☐ Regulation 558

☐ CCME

☐ Prov. Water Quality Objectives (PWQO)

☐ Other ____ (Indicate One)

Is this submission for a **Record of Site Condition?** ☐ Yes ☒ No

Report Guideline on *Certificate of Analysis* ☐ Yes ☒ No

Turnaround Time (TAT) Required:

Regular TAT ☐ 5 to 7 Business Days

Rush TAT (Rush Surcharges Apply)

☐ 3 Business Days ☐ 2 Business Days ☒ 1 Business Day

OR Date Required (Rush Surcharges May Apply):

Please provide prior notification for rush TAT

**TAT is exclusive of weekends and statutory holidays*

Project Information:

Project: 300033273

Site Location:

Sampled By:

AGAT Quote #: PO:

Please note: If quotation number is not provided, client will be billed full price for analysis.

Invoice Information:

Bill To Same: Yes ☐ No ☐

Company:

Contact:

Address:

Email:

Sample Matrix Legend

B	Biota
GW	Ground Water
O	Oil
P	Paint
S	Soil
SD	Sediment
SW	Surface Water

(Check Applicable)

Sample Identification	Date Sampled	Time Sampled	# of Containers	Sample Matrix	Comments/ Special Instructions	Metals and Inorganics	Metal Scan	Hydride Forming Metals	Client Custom Metals	ORPs: ☐ B-HWS ☐ Cl ☐ CN ☐ Cr^{6+} ☐ EC ☐ FOC ☐ NO_3/NO_2 ☐ Total N ☐ Hg ☐ pH ☐ SAR	Nutrients: ☐ TP ☐ NH_3 ☐ TKN ☐ NO_3 ☐ NO_2 ☐ NO_3/NO_2	Volatiles: ☐ VOC ☐ BTEX ☐ THM	CCME Fractions 1 to 4	ABNs	PAHs	Chlorophenols	PCBs	Organochlorine Pesticides	TCLP Metals/Inorganics	Sewer Use	~~As Fe~~ / ~~Nitrates~~	WQA	Nitrates
TW7	Feb 19/2015	10:56	4	GW																		X	
TW7	Feb 19/2015	12:50	1	GW																			X

Samples Relinquished By (Print Name and Sign):	Date	Time	Samples Received By (Print Name and Sign):	Date	Time	
Matt Valeriote / [signature]	Feb 19/2015		A. MARTIN [signature]	2016/02/19	13:45	Page ____ of ____
Samples Relinquished By (Print Name and Sign):	Date	Time	Samples Received By (Print Name and Sign):	Date	Time	Nº: T 022761

TOWN OF CALEDON PLANNING RECEIVED Jul 12, 2021

TOWN OF CALEDON
PLANNING
RECEIVED
Jul 12, 2021

AGAT Laboratories

5835 COOPERS AVENUE
MISSISSAUGA, ONTARIO
CANADA L4Z 1Y2
TEL (905)712-5100
FAX (905)712-5122
http://www.agatlabs.com

CLIENT NAME: R.J. BURNSIDE & ASSOCIATES LTD
292 Speedvale Avenue West, Unit 7
Guelph, ON N1H1C4
(519) 823-4995

ATTENTION TO: Jim Baxter

PROJECT: 3000 33273

AGAT WORK ORDER: 16T069988

WATER ANALYSIS REVIEWED BY: Amanjot Bhela, Inorganic Coordinator

DATE REPORTED: Feb 23, 2016

PAGES (INCLUDING COVER): 9

VERSION*: 2

Should you require any information regarding this analysis please contact your client services representative at (905) 712-5100

*NOTES
VERSION 2:Full Report Issued Feb 22nd 2016.

All samples will be disposed of within 30 days following analysis. Please contact the lab if you require additional sample storage time.

Member of: Association of Professional Engineers, Geologists and Geophysicists of Alberta (APEGGA)
Western Enviro-Agricultural Laboratory Association (WEALA)
Environmental Services Association of Alberta (ESAA)

AGAT Laboratories is accredited to ISO/IEC 17025 by the Canadian Association for Laboratory Accreditation Inc. (CALA) and/or Standards Council of Canada (SCC) for specific tests listed on the scope of accreditation. AGAT Laboratories (Mississauga) is also accredited by the Canadian Association for Laboratory Accreditation Inc. (CALA) for specific drinking water tests. Accreditations are location and parameter specific. A complete listing of parameters for each location is available from www.cala.ca and/or www.scc.ca. The tests in this report may not necessarily be included in the scope of accreditation.

Results relate only to the items tested and to all the items tested
All reportable information as specified by ISO 17025:2005 is available from AGAT Laboratories upon request

TOWN OF CALEDON
PLANNING
RECEIVED

Jul 12, 2021

AGAT Laboratories

5835 COOPERS AVENUE
MISSISSAUGA, ONTARIO
CANADA L4Z 1Y2
TEL (905)712-5100
FAX (905)712-5122
http://www.agatlabs.com

Certificate of Analysis

AGAT WORK ORDER: 16T069988

PROJECT: 3000 33273

CLIENT NAME: R.J. BURNSIDE & ASSOCIATES LTD

ATTENTION TO: Jim Baxter

SAMPLING SITE:

SAMPLED BY:

Nitrate (Water)

DATE RECEIVED: 2016-02-19

DATE REPORTED: 2016-02-23

			SAMPLE DESCRIPTION:	TW7 (12:50)
			SAMPLE TYPE:	Water
			DATE SAMPLED:	2/19/2016
Parameter	Unit	G / S	RDL	7395664
Nitrate as N	mg/L		0.25	8.00

Comments: RDL - Reported Detection Limit; G / S - Guideline / Standard

7395664 Elevated RDL indicates the degree of sample dilution prior to the analysis for anions in order to keep analyte within the calibration range of the instrument and to reduce matrix interference.

Certified By: Amanjot Bhela

Results relate only to the items tested and to all the items tested

TOWN OF CALEDON
PLANNING
RECEIVED
Jul 12, 2021

AGAT Laboratories

5835 COOPERS AVENUE
MISSISSAUGA, ONTARIO
CANADA L4Z 1Y2
TEL (905)712-5100
FAX (905)712-5122
http://www.agatlabs.com

Certificate of Analysis

AGAT WORK ORDER: 16T069988
PROJECT: 3000 33273

CLIENT NAME: R.J. BURNSIDE & ASSOCIATES LTD
ATTENTION TO: Jim Baxter
SAMPLING SITE:
SAMPLED BY:

Water Quality Assessment (mg/L)

DATE RECEIVED: 2016-02-19
DATE REPORTED: 2016-02-23

		SAMPLE DESCRIPTION:		TW7
		SAMPLE TYPE:		Water
		DATE SAMPLED:		2/19/2016
Parameter	Unit	G / S	RDL	7395659
Electrical Conductivity	uS/cm		2	587
pH	pH Units		NA	7.88
Saturation pH				6.99
Langelier Index				0.89
Total Hardness (as CaCO3)	mg/L		0.5	280
Total Dissolved Solids	mg/L		20	354
Alkalinity (as CaCO3)	mg/L		5	262
Bicarbonate (as CaCO3)	mg/L		5	262
Carbonate (as CaCO3)	mg/L		5	<5
Hydroxide (as CaCO3)	mg/L		5	<5
Fluoride	mg/L		0.25	<0.25
Chloride	mg/L		0.50	18.3
Nitrate as N	mg/L		0.25	8.52
Nitrite as N	mg/L		0.25	<0.25
Bromide	mg/L		0.25	<0.25
Sulphate	mg/L		0.50	20.6
Ortho Phosphate as P	mg/L		0.50	<0.50
Reactive Silica	mg/L		0.05	7.03
Ammonia as N	mg/L		0.02	0.10
Total Phosphorus	mg/L		0.05	<0.05
Total Organic Carbon	mg/L		0.5	0.6
Colour	TCU		5	<5
Turbidity	NTU		0.5	3.9
Calcium	mg/L		0.05	77.2
Magnesium	mg/L		0.05	21.2
Sodium	mg/L		0.05	5.60
Potassium	mg/L		0.05	1.00
Aluminum	mg/L		0.004	< 0.004
Antimony	mg/L		0.003	<0.003
Arsenic	mg/L		0.003	<0.003

Certified By: Amanjot Bhela

Results relate only to the items tested and to all the items tested

TOWN OF CALEDON
PLANNING
RECEIVED
Jul 12, 2021

AGAT Laboratories

Certificate of Analysis

AGAT WORK ORDER: 16T069988

PROJECT: 3000 33273

5835 COOPERS AVENUE
MISSISSAUGA, ONTARIO
CANADA L4Z 1Y2
TEL (905)712-5100
FAX (905)712-5122
http://www.agatlabs.com

CLIENT NAME: R.J. BURNSIDE & ASSOCIATES LTD

ATTENTION TO: Jim Baxter

SAMPLING SITE:

SAMPLED BY:

Water Quality Assessment (mg/L)

DATE RECEIVED: 2016-02-19

DATE REPORTED: 2016-02-23

		SAMPLE DESCRIPTION:		TW7
		SAMPLE TYPE:		Water
		DATE SAMPLED:		2/19/2016
Parameter	Unit	G / S	RDL	7395659
Barium	mg/L		0.002	0.093
Beryllium	mg/L		0.001	<0.001
Boron	mg/L		0.010	<0.010
Cadmium	mg/L		0.001	<0.001
Chromium	mg/L		0.003	<0.003
Cobalt	mg/L		0.001	<0.001
Copper	mg/L		0.003	<0.003
Iron	mg/L		0.010	<0.010
Lead	mg/L		0.002	<0.002
Manganese	mg/L		0.002	<0.002
Mercury	mg/L		0.0001	<0.0001
Molybdenum	mg/L		0.002	<0.002
Nickel	mg/L		0.003	<0.003
Selenium	mg/L		0.004	<0.004
Silver	mg/L		0.002	<0.002
Strontium	mg/L		0.005	0.106
Thallium	mg/L		0.006	<0.006
Tin	mg/L		0.002	<0.002
Titanium	mg/L		0.002	<0.002
Tungsten	mg/L		0.010	<0.010
Uranium	mg/L		0.002	<0.002
Vanadium	mg/L		0.002	<0.002
Zinc	mg/L		0.005	0.017
Zirconium	mg/L		0.004	<0.004
% Difference/ Ion Balance	%		NA	7.26

Comments: RDL - Reported Detection Limit; G / S - Guideline / Standard

7395659 Elevated RDL indicates the degree of sample dilution prior to the analysis for anions in order to keep analyte within the calibration range of the instrument and to reduce matrix interference.

Certified By: Amanjot Bhela

Results relate only to the items tested and to all the items tested

TOWN OF CALEDON
PLANNING
RECEIVED
Jul 12, 2021

AGAT Laboratories

5835 COOPERS AVENUE
MISSISSAUGA, ONTARIO
CANADA L4Z 1Y2
TEL (905)712-5100
FAX (905)712-5122
http://www.agatlabs.com

Quality Assurance

CLIENT NAME: R.J. BURNSIDE & ASSOCIATES LTD

AGAT WORK ORDER: 16T069988

PROJECT: 3000 33273

ATTENTION TO: Jim Baxter

SAMPLING SITE:

SAMPLED BY:

Water Analysis

RPT Date: Feb 23, 2016

PARAMETER	Batch	Sample Id	DUPLICATE Dup #1	DUPLICATE Dup #2	DUPLICATE RPD	Method Blank	REFERENCE MATERIAL Measured Value	REFERENCE MATERIAL Acceptable Limits Lower	REFERENCE MATERIAL Acceptable Limits Upper	METHOD BLANK SPIKE Recovery	METHOD BLANK SPIKE Acceptable Limits Lower	METHOD BLANK SPIKE Acceptable Limits Upper	MATRIX SPIKE Recovery	MATRIX SPIKE Acceptable Limits Lower	MATRIX SPIKE Acceptable Limits Upper
Water Quality Assessment (mg/L)															
Electrical Conductivity	7397209		1320	1320	0.0%	< 2	98%	80%	120%	NA			NA		
pH	7397209		8.11	8.02	1.1%	NA	99%	90%	110%	NA			NA		
Total Dissolved Solids	7393504		552	562	1.8%	< 20	96%	80%	120%	NA			NA		
Alkalinity (as CaCO3)	7397209		336	337	0.3%	< 5	102%	80%	120%	NA			NA		
Bicarbonate (as CaCO3)	7397209		336	337	0.3%	< 5	NA			NA			NA		
Carbonate (as CaCO3)	7397209		<5	<5	NA	< 5	NA			NA			NA		
Hydroxide (as CaCO3)	7397209		<5	<5	NA	< 5	NA			NA			NA		
Fluoride	7395664	7395664	<0.25	<0.25	NA	< 0.05	99%	90%	110%	93%	90%	110%	89%	80%	120%
Chloride	7395664	7395664	16.8	16.8	0.0%	< 0.10	105%	90%	110%	98%	90%	110%	96%	80%	120%
Nitrate as N	7395664	7395664	8.00	7.88	1.5%	< 0.05	98%	90%	110%	101%	90%	110%	113%	80%	120%
Nitrite as N	7395664	7395664	<0.25	<0.25	NA	< 0.05	NA	90%	110%	98%	90%	110%	113%	80%	120%
Bromide	7395664	7395664	<0.25	<0.25	NA	< 0.05	108%	90%	110%	104%	90%	110%	112%	80%	120%
Sulphate	7395664	7395664	18.9	18.4	2.7%	< 0.10	104%	90%	110%	95%	90%	110%	102%	80%	120%
Ortho Phosphate as P	7395664	7395664	<0.50	<0.50	NA	< 0.10	95%	90%	110%	90%	90%	110%	92%	80%	120%
Reactive Silica	7395659	7395659	7.03	6.92	1.6%	< 0.05	98%	90%	110%	99%	90%	110%	89%	80%	120%
Ammonia as N	7395659	7395659	0.10	0.10	0.0%	< 0.02	94%	90%	110%	96%	90%	110%	85%	80%	120%
Total Phosphorus	7396488		<0.05	<0.05	NA	< 0.05	102%	80%	120%	95%	90%	110%	102%	70%	130%
Total Organic Carbon	7396282		<0.5	<0.5	NA	< 0.5	96%	90%	110%	103%	90%	110%	99%	80%	120%
Colour	7396488		<5	<5	NA	< 5	102%	90%	110%	NA			NA		
Turbidity	7396488		<0.5	<0.5	NA	< 0.5	100%	90%	110%	NA			NA		
Calcium	7395659	7395659	77.2	76.9	0.4%	< 0.05	105%	90%	110%	104%	90%	110%	89%	70%	130%
Magnesium	7395659	7395659	21.2	21.6	1.9%	< 0.05	98%	90%	110%	98%	90%	110%	86%	70%	130%
Sodium	7395659	7395659	5.60	5.64	0.7%	< 0.05	101%	90%	110%	102%	90%	110%	95%	70%	130%
Potassium	7395659	7395659	1.00	1.02	2.0%	< 0.05	101%	90%	110%	102%	90%	110%	106%	70%	130%
Antimony	7394156		< 0.003	< 0.003	NA	< 0.003	94%	90%	110%	92%	90%	110%	97%	70%	130%
Arsenic	7394156		< 0.003	< 0.003	NA	< 0.003	98%	90%	110%	96%	90%	110%	114%	70%	130%
Barium	7394156		0.453	0.447	1.3%	< 0.002	96%	90%	110%	97%	90%	110%	92%	70%	130%
Beryllium	7394156		< 0.001	< 0.001	NA	< 0.001	91%	90%	110%	97%	90%	110%	98%	70%	130%
Boron	7394156		0.040	0.039	NA	< 0.010	100%	90%	110%	101%	90%	110%	106%	70%	130%
Cadmium	7394156		< 0.001	< 0.001	NA	< 0.001	94%	90%	110%	94%	90%	110%	99%	70%	130%
Chromium	7394156		0.009	0.009	NA	< 0.003	100%	90%	110%	101%	90%	110%	104%	70%	130%
Cobalt	7394156		< 0.001	< 0.001	NA	< 0.001	101%	90%	110%	102%	90%	110%	105%	70%	130%
Copper	7394156		< 0.003	< 0.003	NA	< 0.003	99%	90%	110%	101%	90%	110%	102%	70%	130%
Iron	7394156		7.79	7.51	3.7%	< 0.010	102%	90%	110%	101%	90%	110%	110%	70%	130%
Lead	7394156		< 0.002	< 0.002	NA	< 0.002	92%	90%	110%	91%	90%	110%	91%	70%	130%
Manganese	7394156		1.35	1.35	0.0%	< 0.002	97%	90%	110%	97%	90%	110%	80%	70%	130%
Mercury	7395659	7395659	<0.0001	<0.0001	NA	< 0.0001	99%	90%	110%	98%	90%	110%	99%	80%	120%
Molybdenum	7394156		0.002	0.002	NA	< 0.002	94%	90%	110%	95%	90%	110%	101%	70%	130%
Nickel	7394156		< 0.003	< 0.003	NA	< 0.003	106%	90%	110%	106%	90%	110%	108%	70%	130%

AGAT Laboratories is accredited to ISO/IEC 17025 by the Canadian Association for Laboratory Accreditation Inc. (CALA) and/or Standards Council of Canada (SCC) for specific tests listed on the scope of accreditation. AGAT Laboratories (Mississauga) is also accredited by the Canadian Association for Laboratory Accreditation Inc. (CALA) for specific drinking water tests. Accreditations are location and parameter specific. A complete listing of parameters for each location is available from www.cala.ca and/or www.scc.ca. The tests in this report may not necessarily be included in the scope of accreditation.

Results relate only to the items tested and to all the items tested

TOWN OF CALEDON
PLANNING
RECEIVED
Jul 12, 2021

AGAT Laboratories
5835 COOPERS AVENUE
MISSISSAUGA, ONTARIO
CANADA L4Z 1Y2
TEL (905)712-5100
FAX (905)712-5122
http://www.agatlabs.com

Quality Assurance

CLIENT NAME: R.J. BURNSIDE & ASSOCIATES LTD
AGAT WORK ORDER: 16T069988
PROJECT: 3000 33273
ATTENTION TO: Jim Baxter
SAMPLING SITE:
SAMPLED BY:

Water Analysis (Continued)

RPT Date: Feb 23, 2016			DUPLICATE				REFERENCE MATERIAL			METHOD BLANK SPIKE			MATRIX SPIKE		
PARAMETER	Batch	Sample Id	Dup #1	Dup #2	RPD	Method Blank	Measured Value	Acceptable Limits		Recovery	Acceptable Limits		Recovery	Acceptable Limits	
								Lower	Upper		Lower	Upper		Lower	Upper
Selenium	7394156		< 0.004	< 0.004	NA	< 0.004	102%	90%	110%	99%	90%	110%	119%	70%	130%
Silver	7394156		< 0.002	< 0.002	NA	< 0.002	95%	90%	110%	105%	90%	110%	102%	70%	130%
Strontium	7394156		0.496	0.488	1.6%	< 0.005	94%	90%	110%	96%	90%	110%	95%	70%	130%
Thallium	7394156		< 0.006	< 0.006	NA	< 0.006	100%	90%	110%	100%	90%	110%	101%	70%	130%
Tin	7394156		< 0.002	< 0.002	NA	< 0.002	97%	90%	110%	92%	90%	110%	98%	70%	130%
Titanium	7394156		0.002	0.003	NA	< 0.002	97%	90%	110%	96%	90%	110%	104%	70%	130%
Tungsten	7394156		< 0.010	< 0.010	NA	< 0.010	96%	90%	110%	90%	90%	110%	101%	70%	130%
Uranium	7394156		< 0.002	< 0.002	NA	< 0.002	97%	90%	110%	91%	90%	110%	97%	70%	130%
Vanadium	7394156		< 0.002	< 0.002	NA	< 0.002	91%	90%	110%	95%	90%	110%	101%	70%	130%
Zinc	7394156		< 0.005	< 0.005	NA	< 0.005	97%	90%	110%	98%	90%	110%	101%	70%	130%
Zirconium	7394156		< 0.004	< 0.004	NA	< 0.004	101%	90%	110%	97%	90%	110%	108%	70%	130%

Comments: NA signifies Not Applicable.
Duplicate Qualifier: As the measured result approaches the RL, the uncertainty associated with the value increases dramatically, thus duplicate acceptance limits apply only where the average of the two duplicates is greater than five times the RL.

Certified By: Amanjot Bhela

AGAT Laboratories is accredited to ISO/IEC 17025 by the Canadian Association for Laboratory Accreditation Inc. (CALA) and/or Standards Council of Canada (SCC) for specific tests listed on the scope of accreditation. AGAT Laboratories (Mississauga) is also accredited by the Canadian Association for Laboratory Accreditation Inc. (CALA) for specific drinking water tests. Accreditations are location and parameter specific. A complete listing of parameters for each location is available from www.cala.ca and/or www.scc.ca. The tests in this report may not necessarily be included in the scope of accreditation.

Results relate only to the items tested and to all the items tested

TOWN OF CALEDON
PLANNING
RECEIVED
Jul 12, 2021

AGAT Laboratories
5835 COOPERS AVENUE
MISSISSAUGA, ONTARIO
CANADA L4Z 1Y2
TEL (905)712-5100
FAX (905)712-5122
http://www.agatlabs.com

Method Summary

CLIENT NAME: R.J. BURNSIDE & ASSOCIATES LTD
AGAT WORK ORDER: 16T069988
PROJECT: 3000 33273
ATTENTION TO: Jim Baxter
SAMPLING SITE:
SAMPLED BY:

PARAMETER	AGAT S.O.P	LITERATURE REFERENCE	ANALYTICAL TECHNIQUE
Water Analysis			
Nitrate as N	INOR-93-6004	SM 4110 B	ION CHROMATOGRAPH
Electrical Conductivity	INOR-93-6000	SM 2510 B	PC TITRATE
pH	INOR-93-6000	SM 4500-H+ B	PC TITRATE
Saturation pH		SM 2320 B	CALCULATION
Langelier Index		SM 2330B	CALCULATION
Total Hardness (as CaCO3)	MET-93-6105	EPA SW-846 6010C & 200.7	ICP/OES
Total Dissolved Solids	INOR-93-6028	SM 2540 C	BALANCE
Alkalinity (as CaCO3)	INOR-93-6000	SM 2320 B	PC TITRATE
Bicarbonate (as CaCO3)	INOR-93-6000	SM 2320 B	PC TITRATE
Carbonate (as CaCO3)	INOR-93-6000	SM 2320 B	PC TITRATE
Hydroxide (as CaCO3)	INOR-93-6000	SM 2320 B	PC TITRATE
Fluoride	INOR-93-6004	SM 4110 B	ION CHROMATOGRAPH
Chloride	INOR-93-6004	SM 4110 B	ION CHROMATOGRAPH
Nitrite as N	INOR-93-6004	SM 4110 B	ION CHROMATOGRAPH
Bromide	INOR-93-6004	SM 4110 B	ION CHROMATOGRAPH
Sulphate	INOR-93-6004	SM 4110 B	ION CHROMATOGRAPH
Ortho Phosphate as P	INOR-93-6004	SM 4110 B	ION CHROMATOGRAPH
Reactive Silica	INOR-93-6047	AQ2 EPA-122A & SM 4500 SiO2 D	AQ2 DISCRETE ANALYSER
Ammonia as N	INOR-93-6059	QuikChem 10-107-06-1-J & SM 4500 NH3-F	LACHAT FIA
Total Phosphorus	INOR-93-6057	QuikChem 10-115-01-3-A & SM 4500-P I	LACHAT FIA
Total Organic Carbon	INOR-93-6049	EPA 415.1 & SM 5310	SHIMADZU CARBON ANALYZER
Colour	INOR-93-6046	SM 2120 B	SPECTROPHOTOMETER
Turbidity	INOR-93-6044	SM 2130 B	NEPHELOMETER
Calcium	MET-93-6105	EPA SW-846 6010C & 200.7	ICP/OES
Magnesium	MET-93-6105	EPA SW-846 6010C & 200.7	ICP/OES
Sodium	MET-93-6105	EPA SW-846 6010C & 200.7	ICP/OES
Potassium	MET-93-6105	EPA SW-846 6010C & 200.7	ICP/OES
Aluminum	MET-93-6103	EPA SW-846 6020A & 200.8	ICP-MS
Antimony	MET-93-6103	EPA SW-846 6020A & 200.8	ICP-MS
Arsenic	MET-93-6103	EPA SW-846 6020A & 200.8	ICP-MS
Barium	MET-93-6103	EPA SW-846 6020A & 200.8	ICP-MS
Beryllium	MET-93-6103	EPA SW-846 6020A & 200.8	ICP-MS
Boron	MET-93-6103	EPA SW-846 6020A & 200.8	ICP-MS
Cadmium	MET-93-6103	EPA SW-846 6020A & 200.8	ICP-MS
Chromium	MET-93-6103	EPA SW-846 6020A & 200.8	ICP-MS
Cobalt	MET-93-6103	EPA SW-846 6020A & 200.8	ICP-MS
Copper	MET-93-6103	EPA SW-846 6020A & 200.8	ICP-MS
Iron	MET-93-6103	EPA SW-846 6020A & 200.8	ICP-MS
Lead	MET-93-6103	EPA SW-846 6020A & 200.8	ICP-MS
Manganese	MET-93-6103	EPA SW-846 6020A & 200.8	ICP-MS
Mercury	MET-93-6100	EPA SW 846 7470 & 245.1	CVAAS
Molybdenum	MET-93-6103	EPA SW-846 6020A & 200.8	ICP-MS
Nickel	MET-93-6103	EPA SW-846 6020A & 200.8	ICP-MS
Selenium	MET-93-6103	EPA SW-846 6020A & 200.8	ICP-MS
Silver	MET-93-6103	EPA SW-846 6020A & 200.8	ICP-MS
Strontium	MET-93-6103	EPA SW-846 6020A & 200.8	ICP-MS
Thallium	MET-93-6103	EPA SW-846 6020A & 200.8	ICP-MS

Results relate only to the items tested and to all the items tested

TOWN OF CALEDON
PLANNING
RECEIVED
Jul 12, 2021

AGAT Laboratories
5835 COOPERS AVENUE
MISSISSAUGA, ONTARIO
CANADA L4Z 1Y2
TEL (905)712-5100
FAX (905)712-5122
http://www.agatlabs.com

Method Summary

CLIENT NAME: R.J. BURNSIDE & ASSOCIATES LTD

AGAT WORK ORDER: 16T069988

PROJECT: 3000 33273

ATTENTION TO: Jim Baxter

SAMPLING SITE:

SAMPLED BY:

PARAMETER	AGAT S.O.P	LITERATURE REFERENCE	ANALYTICAL TECHNIQUE
Tin	MET-93-6103	EPA SW-846 6020A & 200.8	ICP-MS
Titanium	MET-93-6103	EPA SW-846 6020A & 200.8	ICP-MS
Tungsten	MET-93-6103	EPA SW-846 6020A & 200.8	ICP-MS
Uranium	MET-93-6103	EPA SW-846 6020A & 200.8	ICP-MS
Vanadium	MET-93-6103	EPA SW-846 6020A & 200.8	ICP-MS
Zinc	MET-93-6103	EPA SW-846 6020A & 200.8	ICP-MS
Zirconium	MET-93-6103	EPA SW-846 6020A & 200.8	ICP-MS
% Difference/ Ion Balance		SM 1030 E	CALCULATION

Results relate only to the items tested and to all the items tested

AGAT Laboratories

* TURBIDITY

5835 Coopers Avenue
Mississauga, Ontario L4Z 1Y2
Ph: 905.712.5100 Fax: 905.712.5122
webearth.agatlabs.com

Chain of Custody Record

If this is a Drinking Water sample, please use Drinking Water Chain of Custody Form (potable water intended for human consumption)

Laboratory Use Only

Work Order #: 16T 069 988

Cooler Quantity: 1 SMALL BLUE

Arrival Temperatures: 8.2 | 9.7 | 9.5

Custody Seal Intact: ☐ Yes ☐ No ☒ N/A

Notes: ON ICE

Report Information:

Company: RJ Burnside + Associates Ltd.

Contact: Jim Baxter

Address: # 292 Speedvale Ave. West, Unit 20, Guelph ONT N1H 1C4

Phone: Fax:

Reports to be sent to:

1. Email: Jim.Baxter@rjburnside.com
2. Email:

Regulatory Requirements: ☐ No Regulatory Requirement

(Please check all applicable boxes)

☐ Regulation 153/04 — Table ____ (Indicate One): ☐ Ind/Com ☐ Res/Park ☐ Agriculture

Soil Texture (Check One): ☐ Coarse ☐ Fine

☐ Sewer Use: ☐ Sanitary ☐ Storm — Region ____ (Indicate One)

☐ Regulation 558

☐ CCME

☐ Prov. Water Quality Objectives (PWQO)

☐ Other ____ (Indicate One)

Is this submission for a **Record of Site Condition?** ☐ Yes ☒ No

Report Guideline on *Certificate of Analysis* ☐ Yes ☒ No

Turnaround Time (TAT) Required:

Regular TAT ☐ 5 to 7 Business Days

Rush TAT (Rush Surcharges Apply)

☐ 3 Business Days ☐ 2 Business Days ☒ 1 Business Day

OR Date Required (Rush Surcharges May Apply):

Please provide prior notification for rush TAT

**TAT is exclusive of weekends and statutory holidays*

Project Information:

Project: 300033273

Site Location:

Sampled By:

AGAT Quote #: PO:

Please note: If quotation number is not provided, client will be billed full price for analysis.

Invoice Information:

Bill To Same: Yes ☐ No ☐

Company:

Contact:

Address:

Email:

Sample Matrix Legend

B	Biota
GW	Ground Water
O	Oil
P	Paint
S	Soil
SD	Sediment
SW	Surface Water

(Check Applicable)

Sample Identification	Date Sampled	Time Sampled	# of Containers	Sample Matrix	Comments/ Special Instructions	Metals and Inorganics	Metal Scan	Hydride Forming Metals	Client Custom Metals	ORPs: ☐ B-HWS ☐ Cl ☐ CN ☐ Cr^{6+} ☐ EC ☐ FOC ☐ NO_3/NO_2 ☐ Total N ☐ Hg ☐ pH ☐ SAR	Nutrients: ☐ TP ☐ NH_3 ☐ TKN ☐ NO_3 ☐ NO_2 ☐ NO_3/NO_2	Volatiles: ☐ VOC ☐ BTEX ☐ THM	CCME Fractions 1 to 4	ABNs	PAHs	Chlorophenols	PCBs	Organochlorine Pesticides	TCLP Metals/Inorganics	Sewer Use	~~As Sp~~ / ~~Nitrates~~	WQA	Nitrates
TW7	Feb 19/2015	10:56	4	GW																		X	
TW7	Feb 19/2015	12:50	1	GW																			X

Samples Relinquished By (Print Name and Sign):	Date	Time	Samples Received By (Print Name and Sign):	Date	Time	
Matt Valeriote / [signature]	Feb 19/2015		A. MARTIN [signature]	2016/02/19	13:45	Page ____ of ____
Samples Relinquished By (Print Name and Sign):	Date	Time	Samples Received By (Print Name and Sign):	Date	Time	Nº: T 022761

TOWN OF CALEDON PLANNING RECEIVED Jul 12, 2021

TOWN OF CALEDON
PLANNING
RECEIVED
Jul 12, 2021

AGAT Laboratories

5835 COOPERS AVENUE
MISSISSAUGA, ONTARIO
CANADA L4Z 1Y2
TEL (905)712-5100
FAX (905)712-5122
http://www.agatlabs.com

CLIENT NAME: R.J. BURNSIDE & ASSOCIATES LTD
292 Speedvale Avenue West, Unit 7
Guelph, ON N1H1C4
(519) 823-4995

ATTENTION TO: Dwight Smikle

PROJECT: 300033273

AGAT WORK ORDER: 16T070836

WATER ANALYSIS REVIEWED BY: Mike Muneswar, BSc (Chem), Senior Inorganic Analyst

DATE REPORTED: Feb 24, 2016

PAGES (INCLUDING COVER): 9

VERSION*: 1

Should you require any information regarding this analysis please contact your client services representative at (905) 712-5100

*NOTES

All samples will be disposed of within 30 days following analysis. Please contact the lab if you require additional sample storage time.

Member of: Association of Professional Engineers, Geologists and Geophysicists of Alberta (APEGGA)
Western Enviro-Agricultural Laboratory Association (WEALA)
Environmental Services Association of Alberta (ESAA)

AGAT Laboratories is accredited to ISO/IEC 17025 by the Canadian Association for Laboratory Accreditation Inc. (CALA) and/or Standards Council of Canada (SCC) for specific tests listed on the scope of accreditation. AGAT Laboratories (Mississauga) is also accredited by the Canadian Association for Laboratory Accreditation Inc. (CALA) for specific drinking water tests. Accreditations are location and parameter specific. A complete listing of parameters for each location is available from www.cala.ca and/or www.scc.ca. The tests in this report may not necessarily be included in the scope of accreditation.

Results relate only to the items tested and to all the items tested
All reportable information as specified by ISO 17025:2005 is available from AGAT Laboratories upon request

TOWN OF CALEDON
PLANNING
RECEIVED

Jul 12, 2021

AGAT Laboratories

5835 COOPERS AVENUE
MISSISSAUGA, ONTARIO
CANADA L4Z 1Y2
TEL (905)712-5100
FAX (905)712-5122
http://www.agatlabs.com

Certificate of Analysis

AGAT WORK ORDER: 16T070836

PROJECT: 300033273

CLIENT NAME: R.J. BURNSIDE & ASSOCIATES LTD

ATTENTION TO: Dwight Smikle

SAMPLING SITE:

SAMPLED BY:

Nitrate (Water)

DATE RECEIVED: 2016-02-23

DATE REPORTED: 2016-02-24

		SAMPLE DESCRIPTION:		TW8 - 10 min
		SAMPLE TYPE:		Water
		DATE SAMPLED:		2/23/2016
Parameter	Unit	G / S	RDL	7401689
Nitrate as N	mg/L		0.25	7.93

Comments: RDL - Reported Detection Limit; G / S - Guideline / Standard

7401689 Sample required dilution prior to analysis in order to keep the analyte within the calibration range of the instrument and/or to minimize any matrix interferences; the RDL was adjusted accordingly.

Certified By:

Results relate only to the items tested and to all the items tested

TOWN OF CALEDON
PLANNING
RECEIVED

Jul 12, 2021

AGAT Laboratories

5835 COOPERS AVENUE
MISSISSAUGA, ONTARIO
CANADA L4Z 1Y2
TEL (905)712-5100
FAX (905)712-5122
http://www.agatlabs.com

Certificate of Analysis

AGAT WORK ORDER: 16T070836

PROJECT: 300033273

CLIENT NAME: R.J. BURNSIDE & ASSOCIATES LTD

ATTENTION TO: Dwight Smikle

SAMPLING SITE:

SAMPLED BY:

Water Quality Assessment - Groundwater Sample

DATE RECEIVED: 2016-02-23

DATE REPORTED: 2016-02-24

		SAMPLE DESCRIPTION:		TW8
		SAMPLE TYPE:		Water
		DATE SAMPLED:		2/23/2016
Parameter	Unit	G / S	RDL	7401690
Electrical Conductivity	uS/cm		2	606
pH	pH Units		NA	8.02
Saturation pH				6.96
Langelier Index				1.06
Total Hardness (as CaCO3)	mg/L		0.5	315
Total Dissolved Solids	mg/L		20	368
Alkalinity (as CaCO3)	mg/L		5	254
Bicarbonate (as CaCO3)	mg/L		5	254
Carbonate (as CaCO3)	mg/L		5	<5
Hydroxide (as CaCO3)	mg/L		5	<5
Fluoride	mg/L		0.25	<0.25
Chloride	mg/L		0.50	10.4
Nitrate as N	mg/L		0.25	8.25
Nitrite as N	mg/L		0.25	<0.25
Bromide	mg/L		0.25	<0.25
Sulphate	mg/L		0.50	49.1
Ortho Phosphate as P	mg/L		0.50	<0.50
Reactive Silica	mg/L		0.05	7.60
Ammonia as N	mg/L		0.02	<0.02
Total Phosphorus	mg/L		0.05	<0.05
Total Organic Carbon	mg/L		0.5	0.6
Colour	TCU		5	<5
Turbidity	NTU		0.5	21.1
Calcium	mg/L		0.05	85.6
Magnesium	mg/L		0.05	24.7
Sodium	mg/L		0.05	4.69
Potassium	mg/L		0.05	1.30
Aluminum	mg/L		0.004	<0.004
Antimony	mg/L		0.003	<0.003
Arsenic	mg/L		0.003	<0.003

Certified By:

Results relate only to the items tested and to all the items tested

TOWN OF CALEDON
PLANNING
RECEIVED
Jul 12, 2021

AGAT Laboratories

Certificate of Analysis

AGAT WORK ORDER: 16T070836

PROJECT: 300033273

5835 COOPERS AVENUE
MISSISSAUGA, ONTARIO
CANADA L4Z 1Y2
TEL (905)712-5100
FAX (905)712-5122
http://www.agatlabs.com

CLIENT NAME: R.J. BURNSIDE & ASSOCIATES LTD

ATTENTION TO: Dwight Smikle

SAMPLING SITE:

SAMPLED BY:

Water Quality Assessment - Groundwater Sample

DATE RECEIVED: 2016-02-23

DATE REPORTED: 2016-02-24

		SAMPLE DESCRIPTION:		TW8
		SAMPLE TYPE:		Water
		DATE SAMPLED:		2/23/2016
Parameter	Unit	G / S	RDL	7401690
Barium	mg/L		0.002	0.110
Beryllium	mg/L		0.001	<0.001
Boron	mg/L		0.010	0.013
Cadmium	mg/L		0.001	<0.001
Chromium	mg/L		0.003	<0.003
Cobalt	mg/L		0.001	<0.001
Copper	mg/L		0.003	<0.003
Iron	mg/L		0.010	<0.010
Lead	mg/L		0.002	<0.002
Manganese	mg/L		0.002	0.007
Mercury	mg/L		0.0001	<0.0001
Molybdenum	mg/L		0.002	<0.002
Nickel	mg/L		0.003	<0.003
Selenium	mg/L		0.004	<0.004
Silver	mg/L		0.002	<0.002
Strontium	mg/L		0.005	0.437
Thallium	mg/L		0.006	<0.006
Tin	mg/L		0.002	<0.002
Titanium	mg/L		0.002	<0.002
Tungsten	mg/L		0.010	<0.010
Uranium	mg/L		0.002	<0.002
Vanadium	mg/L		0.002	<0.002
Zinc	mg/L		0.005	0.016
Zirconium	mg/L		0.004	<0.004
% Difference/ Ion Balance	%		NA	3.27

Comments: RDL - Reported Detection Limit; G / S - Guideline / Standard

7401690 Sample required dilution prior to analysis for Anions in order to keep the analytes within the calibration range of the instrument and/or to minimize any matrix interferences; the RDLs were adjusted accordingly.

Certified By:

Results relate only to the items tested and to all the items tested

TOWN OF CALEDON
PLANNING
RECEIVED
Jul 12, 2021

AGAT Laboratories

5835 COOPERS AVENUE
MISSISSAUGA, ONTARIO
CANADA L4Z 1Y2
TEL (905)712-5100
FAX (905)712-5122
http://www.agatlabs.com

Quality Assurance

CLIENT NAME: R.J. BURNSIDE & ASSOCIATES LTD
AGAT WORK ORDER: 16T070836
PROJECT: 300033273
ATTENTION TO: Dwight Smikle
SAMPLING SITE:
SAMPLED BY:

Water Analysis

RPT Date: Feb 24, 2016

PARAMETER	Batch	Sample Id	DUPLICATE Dup #1	Dup #2	RPD	Method Blank	REFERENCE MATERIAL Measured Value	Acceptable Limits Lower	Upper	METHOD BLANK SPIKE Recovery	Acceptable Limits Lower	Upper	MATRIX SPIKE Recovery	Acceptable Limits Lower	Upper
Water Quality Assessment - Groundwater Sample															
Electrical Conductivity	7401323		<2	<2	NA	< 2	101%	80%	120%	NA			NA		
pH	7401323		5.51	5.16	6.6%	NA	100%	90%	110%	NA			NA		
Total Dissolved Solids	7398229		232	238	2.6%	< 20	96%	80%	120%	NA			NA		
Alkalinity (as CaCO3)	7401323		<5	<5	NA	< 5	96%	80%	120%	NA			NA		
Bicarbonate (as CaCO3)	7401323		<5	<5	NA	< 5	NA			NA			NA		
Carbonate (as CaCO3)	7401323		<5	<5	NA	< 5	NA			NA			NA		
Hydroxide (as CaCO3)	7401323		<5	<5	NA	< 5	NA			NA			NA		
Fluoride	7401689	7401689	< 0.05	< 0.05	NA	< 0.05	94%	90%	110%	94%	90%	110%	99%	80%	120%
Chloride	7401689	7401689	12.7	12.3	3.2%	< 0.10	107%	90%	110%	98%	90%	110%	100%	80%	120%
Nitrate as N	7401689	7401689	7.93	7.70	2.9%	< 0.05	100%	90%	110%	106%	90%	110%	106%	80%	120%
Nitrite as N	7401689	7401689	< 0.05	< 0.05	NA	< 0.05	NA	90%	110%	108%	90%	110%	113%	80%	120%
Bromide	7401689	7401689	< 0.05	< 0.05	NA	< 0.05	110%	90%	110%	96%	90%	110%	107%	80%	120%
Sulphate	7401689	7401689	159	156	1.9%	< 0.10	90%	90%	110%	101%	90%	110%	96%	80%	120%
Ortho Phosphate as P	7401689	7401689	< 0.10	< 0.10	NA	< 0.10	93%	90%	110%	92%	90%	110%	91%	80%	120%
Reactive Silica	7401690	7401690	7.60	7.55	0.7%	< 0.05	95%	90%	110%	97%	90%	110%	87%	80%	120%
Ammonia as N	7399914		<0.02	<0.02	NA	< 0.02	95%	90%	110%	97%	90%	110%	96%	80%	120%
Total Phosphorus	7401323		<0.05	<0.05	NA	< 0.05	103%	80%	120%	100%	90%	110%	101%	70%	130%
Total Organic Carbon	7401690	7401690	0.6	0.6	NA	< 0.5	102%	90%	110%	99%	90%	110%	97%	80%	120%
Colour	7401690	7401690	< 5	<5	NA	< 5	102%	90%	110%	NA			NA		
Turbidity	7401690	7401690	21.1	21.5	1.9%	< 0.5	101%	90%	110%	NA			NA		
Calcium	7401690	7401690	85.6	85.2	0.5%	< 0.05	104%	90%	110%	102%	90%	110%	100%	70%	130%
Magnesium	7401690	7401690	24.7	24.5	0.8%	< 0.05	98%	90%	110%	97%	90%	110%	100%	70%	130%
Sodium	7401690	7401690	4.69	4.70	0.2%	< 0.05	100%	90%	110%	99%	90%	110%	101%	70%	130%
Potassium	7401690	7401690	1.30	1.26	3.1%	< 0.05	100%	90%	110%	99%	90%	110%	105%	70%	130%
Aluminum	7401690	7401690	< 0.004	<0.004	NA	< 0.004	109%	90%	110%	108%	90%	110%	102%	70%	130%
Antimony	7401690	7401690	< 0.003	<0.003	NA	< 0.003	107%	90%	110%	97%	90%	110%	99%	70%	130%
Arsenic	7401690	7401690	< 0.003	<0.003	NA	< 0.003	101%	90%	110%	100%	90%	110%	93%	70%	130%
Barium	7401690	7401690	0.110	0.106	3.7%	< 0.002	102%	90%	110%	100%	90%	110%	107%	70%	130%
Beryllium	7401690	7401690	< 0.001	<0.001	NA	< 0.001	106%	90%	110%	107%	90%	110%	97%	70%	130%
Boron	7401690	7401690	0.013	0.013	NA	< 0.010	107%	90%	110%	101%	90%	110%	91%	70%	130%
Cadmium	7401690	7401690	< 0.001	<0.001	NA	< 0.001	103%	90%	110%	106%	90%	110%	97%	70%	130%
Chromium	7401690	7401690	< 0.003	<0.003	NA	< 0.003	103%	90%	110%	103%	90%	110%	99%	70%	130%
Cobalt	7401690	7401690	< 0.001	<0.001	NA	< 0.001	106%	90%	110%	104%	90%	110%	98%	70%	130%
Copper	7401690	7401690	< 0.003	<0.003	NA	< 0.003	104%	90%	110%	102%	90%	110%	86%	70%	130%
Iron	7401690	7401690	< 0.010	<0.010	NA	< 0.010	108%	90%	110%	103%	90%	110%	104%	70%	130%
Lead	7401690	7401690	< 0.002	<0.002	NA	< 0.002	103%	90%	110%	102%	90%	110%	93%	70%	130%
Manganese	7401690	7401690	0.007	0.007	NA	< 0.002	103%	90%	110%	103%	90%	110%	103%	70%	130%
Mercury	7401690	7401690	<0.0001	<0.0001	NA	< 0.0001	101%	90%	110%	103%	90%	110%	104%	80%	120%
Molybdenum	7401690	7401690	< 0.002	<0.002	NA	< 0.002	101%	90%	110%	96%	90%	110%	108%	70%	130%

AGAT Laboratories is accredited to ISO/IEC 17025 by the Canadian Association for Laboratory Accreditation Inc. (CALA) and/or Standards Council of Canada (SCC) for specific tests listed on the scope of accreditation. AGAT Laboratories (Mississauga) is also accredited by the Canadian Association for Laboratory Accreditation Inc. (CALA) for specific drinking water tests. Accreditations are location and parameter specific. A complete listing of parameters for each location is available from www.cala.ca and/or www.scc.ca. The tests in this report may not necessarily be included in the scope of accreditation.

Results relate only to the items tested and to all the items tested

TOWN OF CALEDON
PLANNING
RECEIVED
Jul 12, 2021

AGAT Laboratories
5835 COOPERS AVENUE
MISSISSAUGA, ONTARIO
CANADA L4Z 1Y2
TEL (905)712-5100
FAX (905)712-5122
http://www.agatlabs.com

Quality Assurance

CLIENT NAME: R.J. BURNSIDE & ASSOCIATES LTD
AGAT WORK ORDER: 16T070836
PROJECT: 300033273
ATTENTION TO: Dwight Smikle
SAMPLING SITE:
SAMPLED BY:

Water Analysis (Continued)

RPT Date: Feb 24, 2016			DUPLICATE				REFERENCE MATERIAL			METHOD BLANK SPIKE			MATRIX SPIKE		
PARAMETER	Batch	Sample Id	Dup #1	Dup #2	RPD	Method Blank	Measured Value	Acceptable Limits		Recovery	Acceptable Limits		Recovery	Acceptable Limits	
								Lower	Upper		Lower	Upper		Lower	Upper
Nickel	7401690	7401690	< 0.003	<0.003	NA	< 0.003	106%	90%	110%	105%	90%	110%	94%	70%	130%
Selenium	7401690	7401690	< 0.004	<0.004	NA	< 0.004	103%	90%	110%	102%	90%	110%	101%	70%	130%
Silver	7401690	7401690	< 0.002	<0.002	NA	< 0.002	105%	90%	110%	108%	90%	110%	101%	70%	130%
Strontium	7401690	7401690	0.437	0.428	2.1%	< 0.005	98%	90%	110%	99%	90%	110%	94%	70%	130%
Thallium	7401690	7401690	< 0.006	<0.006	NA	< 0.006	104%	90%	110%	99%	90%	110%	94%	70%	130%
Tin	7401690	7401690	< 0.002	<0.002	NA	< 0.002	110%	90%	110%	100%	90%	110%	106%	70%	130%
Titanium	7401690	7401690	< 0.002	<0.002	NA	< 0.002	107%	90%	110%	99%	90%	110%	103%	70%	130%
Tungsten	7401690	7401690	< 0.010	<0.010	NA	< 0.010	104%	90%	110%	96%	90%	110%	101%	70%	130%
Uranium	7401690	7401690	< 0.002	<0.002	NA	< 0.002	103%	90%	110%	99%	90%	110%	104%	70%	130%
Vanadium	7401690	7401690	< 0.002	<0.002	NA	< 0.002	102%	90%	110%	101%	90%	110%	103%	70%	130%
Zinc	7401690	7401690	0.016	0.016	NA	< 0.005	103%	90%	110%	103%	90%	110%	83%	70%	130%
Zirconium	7401690	7401690	< 0.004	<0.004	NA	< 0.004	96%	90%	110%	93%	90%	110%	104%	70%	130%

Comments: NA signifies Not Applicable.
Duplicate Qualifier: As the measured result approaches the RL, the uncertainty associated with the value increases dramatically, thus duplicate acceptance limits apply only where the average of the two duplicates is greater than five times the RL.

Certified By:

AGAT Laboratories is accredited to ISO/IEC 17025 by the Canadian Association for Laboratory Accreditation Inc. (CALA) and/or Standards Council of Canada (SCC) for specific tests listed on the scope of accreditation. AGAT Laboratories (Mississauga) is also accredited by the Canadian Association for Laboratory Accreditation Inc. (CALA) for specific drinking water tests. Accreditations are location and parameter specific. A complete listing of parameters for each location is available from www.cala.ca and/or www.scc.ca. The tests in this report may not necessarily be included in the scope of accreditation.

Results relate only to the items tested and to all the items tested

TOWN OF CALEDON
PLANNING
RECEIVED
Jul 12, 2021

AGAT Laboratories
5835 COOPERS AVENUE
MISSISSAUGA, ONTARIO
CANADA L4Z 1Y2
TEL (905)712-5100
FAX (905)712-5122
http://www.agatlabs.com

Method Summary

CLIENT NAME: R.J. BURNSIDE & ASSOCIATES LTD
AGAT WORK ORDER: 16T070836
PROJECT: 300033273
ATTENTION TO: Dwight Smikle
SAMPLING SITE:
SAMPLED BY:

PARAMETER	AGAT S.O.P	LITERATURE REFERENCE	ANALYTICAL TECHNIQUE
Water Analysis			
Nitrate as N	INOR-93-6004	SM 4110 B	ION CHROMATOGRAPH
Electrical Conductivity	INOR-93-6000	SM 2510 B	PC TITRATE
pH	INOR-93-6000	SM 4500-H+ B	PC TITRATE
Saturation pH		SM 2320 B	CALCULATION
Langelier Index		SM 2330B	CALCULATION
Total Hardness (as CaCO3)	MET-93-6105	EPA SW-846 6010C & 200.7	ICP/OES
Total Dissolved Solids	INOR-93-6028	SM 2540 C	BALANCE
Alkalinity (as CaCO3)	INOR-93-6000	SM 2320 B	PC TITRATE
Bicarbonate (as CaCO3)	INOR-93-6000	SM 2320 B	PC TITRATE
Carbonate (as CaCO3)	INOR-93-6000	SM 2320 B	PC TITRATE
Hydroxide (as CaCO3)	INOR-93-6000	SM 2320 B	PC TITRATE
Fluoride	INOR-93-6004	SM 4110 B	ION CHROMATOGRAPH
Chloride	INOR-93-6004	SM 4110 B	ION CHROMATOGRAPH
Nitrite as N	INOR-93-6004	SM 4110 B	ION CHROMATOGRAPH
Bromide	INOR-93-6004	SM 4110 B	ION CHROMATOGRAPH
Sulphate	INOR-93-6004	SM 4110 B	ION CHROMATOGRAPH
Ortho Phosphate as P	INOR-93-6004	SM 4110 B	ION CHROMATOGRAPH
Reactive Silica	INOR-93-6047	AQ2 EPA-122A & SM 4500 SiO2 D	AQ2 DISCRETE ANALYSER
Ammonia as N	INOR-93-6059	QuikChem 10-107-06-1-J & SM 4500 NH3-F	LACHAT FIA
Total Phosphorus	INOR-93-6057	QuikChem 10-115-01-3-A & SM 4500-P I	LACHAT FIA
Total Organic Carbon	INOR-93-6049	EPA 415.1 & SM 5310	SHIMADZU CARBON ANALYZER
Colour	INOR-93-6046	SM 2120 B	SPECTROPHOTOMETER
Turbidity	INOR-93-6044	SM 2130 B	NEPHELOMETER
Calcium	MET-93-6105	EPA SW-846 6010C & 200.7	ICP/OES
Magnesium	MET-93-6105	EPA SW-846 6010C & 200.7	ICP/OES
Sodium	MET-93-6105	EPA SW-846 6010C & 200.7	ICP/OES
Potassium	MET-93-6105	EPA SW-846 6010C & 200.7	ICP/OES
Aluminum	MET-93-6103	EPA SW-846 6020A & 200.8	ICP-MS
Antimony	MET-93-6103	EPA SW-846 6020A & 200.8	ICP-MS
Arsenic	MET-93-6103	EPA SW-846 6020A & 200.8	ICP-MS
Barium	MET-93-6103	EPA SW-846 6020A & 200.8	ICP-MS
Beryllium	MET-93-6103	EPA SW-846 6020A & 200.8	ICP-MS
Boron	MET-93-6103	EPA SW-846 6020A & 200.8	ICP-MS
Cadmium	MET-93-6103	EPA SW-846 6020A & 200.8	ICP-MS
Chromium	MET-93-6103	EPA SW-846 6020A & 200.8	ICP-MS
Cobalt	MET-93-6103	EPA SW-846 6020A & 200.8	ICP-MS
Copper	MET-93-6103	EPA SW-846 6020A & 200.8	ICP-MS
Iron	MET-93-6103	EPA SW-846 6020A & 200.8	ICP-MS
Lead	MET-93-6103	EPA SW-846 6020A & 200.8	ICP-MS
Manganese	MET-93-6103	EPA SW-846 6020A & 200.8	ICP-MS
Mercury	MET-93-6100	EPA SW 846 7470 & 245.1	CVAAS
Molybdenum	MET-93-6103	EPA SW-846 6020A & 200.8	ICP-MS
Nickel	MET-93-6103	EPA SW-846 6020A & 200.8	ICP-MS
Selenium	MET-93-6103	EPA SW-846 6020A & 200.8	ICP-MS
Silver	MET-93-6103	EPA SW-846 6020A & 200.8	ICP-MS
Strontium	MET-93-6103	EPA SW-846 6020A & 200.8	ICP-MS
Thallium	MET-93-6103	EPA SW-846 6020A & 200.8	ICP-MS

Results relate only to the items tested and to all the items tested

TOWN OF CALEDON
PLANNING
RECEIVED
Jul 12, 2021

AGAT Laboratories
5835 COOPERS AVENUE
MISSISSAUGA, ONTARIO
CANADA L4Z 1Y2
TEL (905)712-5100
FAX (905)712-5122
http://www.agatlabs.com

Method Summary

CLIENT NAME: R.J. BURNSIDE & ASSOCIATES LTD

AGAT WORK ORDER: 16T070836

PROJECT: 300033273

ATTENTION TO: Dwight Smikle

SAMPLING SITE:

SAMPLED BY:

PARAMETER	AGAT S.O.P	LITERATURE REFERENCE	ANALYTICAL TECHNIQUE
Tin	MET-93-6103	EPA SW-846 6020A & 200.8	ICP-MS
Titanium	MET-93-6103	EPA SW-846 6020A & 200.8	ICP-MS
Tungsten	MET-93-6103	EPA SW-846 6020A & 200.8	ICP-MS
Uranium	MET-93-6103	EPA SW-846 6020A & 200.8	ICP-MS
Vanadium	MET-93-6103	EPA SW-846 6020A & 200.8	ICP-MS
Zinc	MET-93-6103	EPA SW-846 6020A & 200.8	ICP-MS
Zirconium	MET-93-6103	EPA SW-846 6020A & 200.8	ICP-MS
% Difference/ Ion Balance		SM 1030 E	CALCULATION

Results relate only to the items tested and to all the items tested

AGAT Laboratories
5835 Coopers Avenue
Mississauga, Ontario L4Z 1Y2
Ph: 905.712.5100 Fax: 905.712.5122
webearth.agatlabs.com

Chain of Custody Record

If this is a Drinking Water sample, please use Drinking Water Chain of Custody Form (potable water intended for human consumption)

Laboratory Use Only

Work Order #: 16T070836

Cooler Quantity:

Arrival Temperatures: 2.6 | 2.1 | 3.3

Custody Seal Intact: ☐ Yes ☐ No ☑ N/A

Notes:

Report Information:

Company: BURNSIDE
Contact: DWIGHT SMIKLE
Address:
Phone: 519 823-4995 Fax:
Reports to be sent to:
1. Email: DwightSmikle@rjburnside.com
2. Email:

Regulatory Requirements: ☒ No Regulatory Requirement

(Please check all applicable boxes)

☐ Regulation 153/04
Table ____ (Indicate One)
☐ Ind/Com
☐ Res/Park
☐ Agriculture

Soil Texture (Check One)
☐ Coarse
☐ Fine

☐ Sewer Use
☐ Sanitary
☐ Storm

Region ____ (Indicate One)

☐ Regulation 558
☐ CCME
☐ Prov. Water Quality Objectives (PWQO)
☐ Other
(Indicate One)

Turnaround Time (TAT) Required:

Regular TAT ☐ 5 to 7 Business Days

Rush TAT (Rush Surcharges Apply)

☐ 3 Business Days ☐ 2 Business Days ☒ 1 Business Day

OR Date Required (Rush Surcharges May Apply):

Please provide prior notification for rush TAT
**TAT is exclusive of weekends and statutory holidays*

Project Information:

Project: 300033273
Site Location: Belfountain
Sampled By: S Quinlan
AGAT Quote #: PO:
Please note: If quotation number is not provided, client will be billed full price for analysis.

Is this submission for a **Record of Site Condition?** ☐ Yes ☒ No

Report Guideline on *Certificate of Analysis* ☐ Yes ☒ No

Invoice Information:

Bill To Same: Yes ☒ No ☐

Company:
Contact:
Address:
Email:

Sample Matrix Legend

B	Biota
GW	Ground Water
O	Oil
P	Paint
S	Soil
SD	Sediment
SW	Surface Water

Sample Identification	Date Sampled	Time Sampled	# of Containers	Sample Matrix	Comments/ Special Instructions	Metals and Inorganics	Metal Scan	Hydride Forming Metals	Client Custom Metals	(Check Applicable) ORPs: ☐ B-HWS ☐ Cl ☐ CN ☐ Cr^{6+} ☐ EC ☐ FOC ☐ NO_3/NO_2 ☐ Total N ☐ Hg ☐ pH ☐ SAR	Nutrients: ☐ TP ☐ NH_3 ☐ TKN ☐ NO_3 ☐ NO_2 ☐ NO_3/NO_2	Volatiles: ☐ VOC ☐ BTEX ☐ THM	CCME Fractions 1 to 4	ABNs	PAHs	Chlorophenols	PCBs	Organochlorine Pesticides	TCLP Metals/Inorganics	Sewer Use	Nitrate	TDS	Various Inorganics	Metals	Ammonia, Total Phosphorus	TOC	Mercury
TW8 - 10 min	23FEB16	12:52	1	GW																			✓					
TW8	23 FEB16	14:42	6	GW																			✓	✓	✓	✓	✓	✓	✓

Samples Relinquished By (Print Name and Sign):	Date	Time	Samples Received By (Print Name and Sign):	Date	Time
S Quinlan	23FEB16	15:00	Sharmin	Feb 23/16	3:50pm
Samples Relinquished By (Print Name and Sign):	Date	Time	Samples Received By (Print Name and Sign):	Date	Time

Page 1 of 1

Nº: T 021167

TOWN OF CALEDON PLANNING RECEIVED Jul 11, 2016

TOWN OF CALEDON
PLANNING
RECEIVED
Jul 12, 2021

AGAT Laboratories

5835 COOPERS AVENUE
MISSISSAUGA, ONTARIO
CANADA L4Z 1Y2
TEL (905)712-5100
FAX (905)712-5122
http://www.agatlabs.com

CLIENT NAME: R.J. BURNSIDE & ASSOCIATES LTD
292 Speedvale Avenue West, Unit 7
Guelph, ON N1H1C4
(519) 823-4995

ATTENTION TO: Jim Baxter

PROJECT: Belfountain - 300033273

AGAT WORK ORDER: 16T071689

WATER ANALYSIS REVIEWED BY: Amanjot Bhela, Inorganic Coordinator

DATE REPORTED: Feb 26, 2016

PAGES (INCLUDING COVER): 4

VERSION*: 1

Should you require any information regarding this analysis please contact your client services representative at (905) 712-5100

*NOTES
VERSION 1:Partial Report Issued Feb 26th 2016 at 1:20pm

All samples will be disposed of within 30 days following analysis. Please contact the lab if you require additional sample storage time.

Member of: Association of Professional Engineers, Geologists and Geophysicists of Alberta (APEGGA)
Western Enviro-Agricultural Laboratory Association (WEALA)
Environmental Services Association of Alberta (ESAA)

AGAT Laboratories is accredited to ISO/IEC 17025 by the Canadian Association for Laboratory Accreditation Inc. (CALA) and/or Standards Council of Canada (SCC) for specific tests listed on the scope of accreditation. AGAT Laboratories (Mississauga) is also accredited by the Canadian Association for Laboratory Accreditation Inc. (CALA) for specific drinking water tests. Accreditations are location and parameter specific. A complete listing of parameters for each location is available from www.cala.ca and/or www.scc.ca. The tests in this report may not necessarily be included in the scope of accreditation.

Results relate only to the items tested and to all the items tested
All reportable information as specified by ISO 17025:2005 is available from AGAT Laboratories upon request

TOWN OF CALEDON
PLANNING
RECEIVED

Jul 12, 2021

AGAT Laboratories

5835 COOPERS AVENUE
MISSISSAUGA, ONTARIO
CANADA L4Z 1Y2
TEL (905)712-5100
FAX (905)712-5122
http://www.agatlabs.com

Certificate of Analysis

AGAT WORK ORDER: 16T071689

PROJECT: Belfountain - 300033273

CLIENT NAME: R.J. BURNSIDE & ASSOCIATES LTD

ATTENTION TO: Jim Baxter

SAMPLING SITE:

SAMPLED BY:

Nitrate (Water)

DATE RECEIVED: 2016-02-25

DATE REPORTED: 2016-02-26

			SAMPLE DESCRIPTION:	TW10N
			SAMPLE TYPE:	Water
			DATE SAMPLED:	2/25/2016
Parameter	Unit	G / S	RDL	7408001
Nitrate as N	mg/L		0.25	2.41

Comments: RDL - Reported Detection Limit; G / S - Guideline / Standard

7408001 Elevated RDL indicates the degree of sample dilution prior to the analysis in order to keep analyte within the calibration range of the instrument and to reduce matrix interference.

Certified By: Amanjot Bhela

Results relate only to the items tested and to all the items tested

TOWN OF CALEDON
PLANNING
RECEIVED
Jul 12, 2021

AGAT Laboratories

5835 COOPERS AVENUE
MISSISSAUGA, ONTARIO
CANADA L4Z 1Y2
TEL (905)712-5100
FAX (905)712-5122
http://www.agatlabs.com

Method Summary

CLIENT NAME: R.J. BURNSIDE & ASSOCIATES LTD

AGAT WORK ORDER: 16T071689

PROJECT: Belfountain - 300033273

ATTENTION TO: Jim Baxter

SAMPLING SITE:

SAMPLED BY:

PARAMETER	AGAT S.O.P	LITERATURE REFERENCE	ANALYTICAL TECHNIQUE
Water Analysis			
Nitrate as N	INOR-93-6004	SM 4110 B	ION CHROMATOGRAPH

Results relate only to the items tested and to all the items tested

AGAT Laboratories

5835 Coopers Avenue
Mississauga, Ontario L4Z 1Y2
Ph: 905.712.5100 Fax: 905.712.5122
webearth.agatlabs.com

Chain of Custody Record

If this is a Drinking Water sample, please use Drinking Water Chain of Custody Form (potable water intended for human consumption)

Laboratory Use Only

Work Order #: 16T071689

Cooler Quantity:

Arrival Temperatures: 5.3 | 4.6 | 5.5

Custody Seal Intact: ☐Yes ☐No ☐N/A

Notes:

Report Information:

Company: R.J. Burnside + Associates Limited

Contact: Jim Baxter

Address: 292 Speedvale Ave. West, unit 20, Guelph, ONT

Phone: 519-823-4995 Fax:

Reports to be sent to:

1. Email: jim.baxter@rjburnside.com
2. Email:

Regulatory Requirements: ☐ No Regulatory Requirement

(Please check all applicable boxes)

☐ Regulation 153/04 — Table ____ (Indicate One) ☐Ind/Com ☐Res/Park ☐Agriculture

Soil Texture (Check One) ☐Coarse ☐Fine

☐ Sewer Use ☐Sanitary ☐Storm — Region ____ (Indicate One)

☐ Regulation 558 ☐ CCME ☐ Prov. Water Quality Objectives (PWQO) ☐ Other ____ (Indicate One)

Is this submission for a **Record of Site Condition?** ☐ Yes ☒ No

Report Guideline on Certificate of Analysis ☐ Yes ☒ No

Turnaround Time (TAT) Required:

Regular TAT ☐ 5 to 7 Business Days

Rush TAT (Rush Surcharges Apply)

☐ 3 Business Days ☐ 2 Business Days ☒ 1 Business Day

OR Date Required (Rush Surcharges May Apply):

Please provide prior notification for rush TAT

**TAT is exclusive of weekends and statutory holidays*

Project Information:

Project: Belfountain - 300033273

Site Location: Belfountain

Sampled By: Matt Valeriote

AGAT Quote #: PO:

Please note: If quotation number is not provided, client will be billed full price for analysis.

Invoice Information:

Bill To Same: Yes ☐ No ☐

Company:

Contact:

Address:

Email:

Sample Matrix Legend

B	Biota
GW	Ground Water
O	Oil
P	Paint
S	Soil
SD	Sediment
SW	Surface Water

(Check Applicable)

Sample Identification	Date Sampled	Time Sampled	# of Containers	Sample Matrix	Comments/ Special Instructions	Metals and Inorganics	Metal Scan	Hydride Forming Metals	Client Custom Metals	ORPs: ☐B-HWS ☐Cl ☐CN ☐Cr6+ ☐EC ☐FOC ☐NO3/NO2 ☐Total N ☐Hg ☐pH ☐SAR	Nutrients: ☐TP ☐NH3 ☐TKN ☐NO3 ☐NO2 ☐NO3/NO2	Volatiles: ☐VOC ☐BTEX ☐THM	CCME Fractions 1 to 4	ABNs	PAHs	Chlorophenols	PCBs	Organochlorine Pesticides	TCLP Metals/Inorganics	Sewer Use	Nitrates	MWQA
TW10N	Feb.25,2016	13:40	1	GW																	X	
TW10	Feb.25,2016	15:30	6	GW																		X

Samples Relinquished By (Print Name and Sign):	Date	Time	Samples Received By (Print Name and Sign):	Date	Time
Matt Valeriote / [signature]	Feb.25		Neil Ramnarayan [signature]	Feb.25,16	4:41pm
Samples Relinquished By (Print Name and Sign):	Date 2016	Time	Samples Received By (Print Name and Sign):	Date	Time

Page 1 of 1

Nº: T 021168

Document ID: DIV-78-1511.010

Pink Copy - Client | Yellow Copy - AGAT | White Copy- AGAT

Date Issued: November 2, 2015

TOWN OF CALEDON PLANNING RECEIVED Jul 12 2021

TOWN OF CALEDON
PLANNING
RECEIVED
Jul 12, 2021

AGAT Laboratories

5835 COOPERS AVENUE
MISSISSAUGA, ONTARIO
CANADA L4Z 1Y2
TEL (905)712-5100
FAX (905)712-5122
http://www.agatlabs.com

CLIENT NAME: R.J. BURNSIDE & ASSOCIATES LTD
292 Speedvale Avenue West, Unit 7
Guelph, ON N1H1C4
(519) 823-4995

ATTENTION TO: Jim Baxter

PROJECT: 300033273

AGAT WORK ORDER: 16T072180

WATER ANALYSIS REVIEWED BY: Anthony Dapaah, PhD (Chem), Inorganic Lab Manager

DATE REPORTED: Mar 01, 2016

PAGES (INCLUDING COVER): 9

VERSION*: 2

Should you require any information regarding this analysis please contact your client services representative at (905) 712-5100

*NOTES
VERSION 2:Revised Report issued March 07th 2016. Reactive Silica Results corrected.

All samples will be disposed of within 30 days following analysis. Please contact the lab if you require additional sample storage time.

Member of: Association of Professional Engineers, Geologists and Geophysicists of Alberta (APEGGA)
Western Enviro-Agricultural Laboratory Association (WEALA)
Environmental Services Association of Alberta (ESAA)

AGAT Laboratories is accredited to ISO/IEC 17025 by the Canadian Association for Laboratory Accreditation Inc. (CALA) and/or Standards Council of Canada (SCC) for specific tests listed on the scope of accreditation. AGAT Laboratories (Mississauga) is also accredited by the Canadian Association for Laboratory Accreditation Inc. (CALA) for specific drinking water tests. Accreditations are location and parameter specific. A complete listing of parameters for each location is available from www.cala.ca and/or www.scc.ca. The tests in this report may not necessarily be included in the scope of accreditation.

Results relate only to the items tested and to all the items tested
All reportable information as specified by ISO 17025:2005 is available from AGAT Laboratories upon request

TOWN OF CALEDON
PLANNING
RECEIVED

Jul 12, 2021

AGAT Laboratories

5835 COOPERS AVENUE
MISSISSAUGA, ONTARIO
CANADA L4Z 1Y2
TEL (905)712-5100
FAX (905)712-5122
http://www.agatlabs.com

Certificate of Analysis

AGAT WORK ORDER: 16T072180

PROJECT: 300033273

CLIENT NAME: R.J. BURNSIDE & ASSOCIATES LTD

ATTENTION TO: Jim Baxter

SAMPLING SITE:

SAMPLED BY:MV

Nitrate (Water)

DATE RECEIVED: 2016-02-29

DATE REPORTED: 2016-03-01

			SAMPLE DESCRIPTION:	TW9N
			SAMPLE TYPE:	Water
			DATE SAMPLED:	2/26/2016
Parameter	Unit	G / S	RDL	7410958
Nitrate as N	mg/L		0.05	3.65

Comments: RDL - Reported Detection Limit; G / S - Guideline / Standard

Certified By:

Results relate only to the items tested and to all the items tested

TOWN OF CALEDON
PLANNING
RECEIVED
Jul 12, 2021

AGAT Laboratories

5835 COOPERS AVENUE
MISSISSAUGA, ONTARIO
CANADA L4Z 1Y2
TEL (905)712-5100
FAX (905)712-5122
http://www.agatlabs.com

Certificate of Analysis

AGAT WORK ORDER: 16T072180
PROJECT: 300033273

CLIENT NAME: R.J. BURNSIDE & ASSOCIATES LTD
SAMPLING SITE:

ATTENTION TO: Jim Baxter
SAMPLED BY:MV

Water Quality Assessment (mg/L)

DATE RECEIVED: 2016-02-29

DATE REPORTED: 2016-03-01

		SAMPLE DESCRIPTION:		TW9
		SAMPLE TYPE:		Water
		DATE SAMPLED:		2/26/2016
Parameter	Unit	G / S	RDL	7410959
Electrical Conductivity	uS/cm		2	610
pH	pH Units		NA	8.02
Saturation pH				6.94
Langelier Index				1.08
Total Hardness (as CaCO3)	mg/L		0.5	310
Total Dissolved Solids	mg/L		20	332
Alkalinity (as CaCO3)	mg/L		5	265
Bicarbonate (as CaCO3)	mg/L		5	265
Carbonate (as CaCO3)	mg/L		5	<5
Hydroxide (as CaCO3)	mg/L		5	<5
Fluoride	mg/L		0.05	<0.05
Chloride	mg/L		0.10	9.37
Nitrate as N	mg/L		0.05	3.26
Nitrite as N	mg/L		0.05	<0.05
Bromide	mg/L		0.05	<0.05
Sulphate	mg/L		0.10	50.0
Ortho Phosphate as P	mg/L		0.10	<0.10
Reactive Silica	mg/L		0.05	8.72
Ammonia as N	mg/L		0.02	<0.02
Total Phosphorus	mg/L		0.05	<0.05
Total Organic Carbon	mg/L		0.5	0.6
Colour	TCU		5	<5
Turbidity	NTU		0.5	10.4
Calcium	mg/L		0.05	82.4
Magnesium	mg/L		0.05	25.4
Sodium	mg/L		0.05	3.99
Potassium	mg/L		0.05	1.19
Aluminum	mg/L		0.004	<0.004
Antimony	mg/L		0.003	<0.003
Arsenic	mg/L		0.003	<0.003

Certified By:

Results relate only to the items tested and to all the items tested

TOWN OF CALEDON
PLANNING
RECEIVED
Jul 12, 2021

AGAT Laboratories

5835 COOPERS AVENUE
MISSISSAUGA, ONTARIO
CANADA L4Z 1Y2
TEL (905)712-5100
FAX (905)712-5122
http://www.agatlabs.com

Certificate of Analysis

AGAT WORK ORDER: 16T072180
PROJECT: 300033273

CLIENT NAME: R.J. BURNSIDE & ASSOCIATES LTD
SAMPLING SITE:

ATTENTION TO: Jim Baxter
SAMPLED BY:MV

Water Quality Assessment (mg/L)

DATE RECEIVED: 2016-02-29

DATE REPORTED: 2016-03-01

		SAMPLE DESCRIPTION:		TW9
		SAMPLE TYPE:		Water
		DATE SAMPLED:		2/26/2016
Parameter	Unit	G / S	RDL	7410959
Barium	mg/L		0.002	0.070
Beryllium	mg/L		0.001	<0.001
Boron	mg/L		0.010	0.014
Cadmium	mg/L		0.001	<0.001
Chromium	mg/L		0.003	0.005
Cobalt	mg/L		0.001	<0.001
Copper	mg/L		0.003	<0.003
Iron	mg/L		0.010	< 0.010
Lead	mg/L		0.002	<0.002
Manganese	mg/L		0.002	<0.002
Mercury	mg/L		0.0001	<0.0001
Molybdenum	mg/L		0.002	<0.002
Nickel	mg/L		0.003	<0.003
Selenium	mg/L		0.004	<0.004
Silver	mg/L		0.002	<0.002
Strontium	mg/L		0.005	0.320
Thallium	mg/L		0.006	<0.006
Tin	mg/L		0.002	<0.002
Titanium	mg/L		0.002	<0.002
Tungsten	mg/L		0.010	<0.010
Uranium	mg/L		0.002	<0.002
Vanadium	mg/L		0.002	<0.002
Zinc	mg/L		0.005	0.022
Zirconium	mg/L		0.004	<0.004
% Difference/ Ion Balance	%		NA	3.26

Comments: RDL - Reported Detection Limit; G / S - Guideline / Standard

7410959 Revised March 04, 2016.
Revision: This report replaces the Certificate of Analysis issued on March 01, 2016. The Certificate of analysis has been updated to correct the erroneous Reactive Silica value reported.The discrepancy was due to sampling error during the analysis.

Certified By:

Results relate only to the items tested and to all the items tested

TOWN OF CALEDON
PLANNING
RECEIVED
Jul 12, 2021

AGAT Laboratories

5835 COOPERS AVENUE
MISSISSAUGA, ONTARIO
CANADA L4Z 1Y2
TEL (905)712-5100
FAX (905)712-5122
http://www.agatlabs.com

Quality Assurance

CLIENT NAME: R.J. BURNSIDE & ASSOCIATES LTD
AGAT WORK ORDER: 16T072180
PROJECT: 300033273
ATTENTION TO: Jim Baxter
SAMPLING SITE:
SAMPLED BY:MV

Water Analysis

RPT Date: Mar 01, 2016			DUPLICATE				REFERENCE MATERIAL			METHOD BLANK SPIKE			MATRIX SPIKE		
PARAMETER	Batch	Sample Id	Dup #1	Dup #2	RPD	Method Blank	Measured Value	Acceptable Limits		Recovery	Acceptable Limits		Recovery	Acceptable Limits	
								Lower	Upper		Lower	Upper		Lower	Upper
Water Quality Assessment (mg/L)															
Electrical Conductivity	7410959	7410959	610	611	0.2%	< 2	102%	80%	120%	NA			NA		
pH	7410959	7410959	8.02	8.01	0.1%	NA	99%	90%	110%	NA			NA		
Total Dissolved Solids	7410971		436	430	1.4%	< 20	96%	80%	120%	NA			NA		
Alkalinity (as CaCO3)	7410959	7410959	265	263	0.8%	< 5	102%	80%	120%	NA			NA		
Bicarbonate (as CaCO3)	7410959	7410959	265	263	0.8%	< 5	NA			NA			NA		
Carbonate (as CaCO3)	7410959	7410959	<5	<5	NA	< 5	NA			NA			NA		
Hydroxide (as CaCO3)	7410959	7410959	<5	<5	NA	< 5	NA			NA			NA		
Fluoride	7411422		<0.5	<0.5	NA	< 0.05	96%	90%	110%	95%	90%	110%	89%	80%	120%
Chloride	7411422		247	248	0.4%	< 0.10	105%	90%	110%	109%	90%	110%	99%	80%	120%
Nitrate as N	7411422		1.2	1.1	8.7%	< 0.05	101%	90%	110%	110%	90%	110%	114%	80%	120%
Nitrite as N	7411422		<0.5	<0.5	NA	< 0.05	NA	90%	110%	109%	90%	110%	112%	80%	120%
Bromide	7411422		<0.5	<0.5	NA	< 0.05	108%	90%	110%	109%	90%	110%	109%	80%	120%
Sulphate	7411422		162	162	0.0%	< 0.10	101%	90%	110%	108%	90%	110%	105%	80%	120%
Ortho Phosphate as P	7411422		<1.0	<1.0	NA	< 0.10	92%	90%	110%	98%	90%	110%	88%	80%	120%
Reactive Silica	7402270		1.97	2.00	1.5%	< 0.05	98%	90%	110%	99%	90%	110%	93%	80%	120%
Ammonia as N	7408819		4.81	4.80	0.2%	< 0.02	100%	90%	110%	103%	90%	110%	96%	80%	120%
Total Phosphorus	7410959	7410959	<0.05	<0.05	NA	< 0.05	102%	80%	120%	103%	90%	110%	102%	70%	130%
Total Organic Carbon	7410959	7410959	0.6	0.5	NA	< 0.5	98%	90%	110%	98%	90%	110%	94%	80%	120%
Colour	7410959	7410959	<5	<5	NA	< 5	100%	90%	110%	NA			NA		
Turbidity	7410852		948	1020	7.3%	< 0.5	101%	90%	110%	NA			NA		
Calcium	7410959	7410959	82.4	82.5	0.1%	< 0.05	105%	90%	110%	106%	90%	110%	98%	70%	130%
Magnesium	7410959	7410959	25.4	25.5	0.4%	< 0.05	98%	90%	110%	100%	90%	110%	97%	70%	130%
Sodium	7410959	7410959	3.99	3.97	0.5%	< 0.05	100%	90%	110%	102%	90%	110%	99%	70%	130%
Potassium	7410959	7410959	1.19	1.17	1.7%	< 0.05	101%	90%	110%	103%	90%	110%	101%	70%	130%
Aluminum	7410959	7410959	< 0.004	< 0.004	NA	< 0.004	102%	90%	110%	105%	90%	110%	117%	70%	130%
Antimony	7410959	7410959	< 0.003	< 0.003	NA	< 0.003	98%	90%	110%	96%	90%	110%	101%	70%	130%
Arsenic	7410959	7410959	< 0.003	< 0.003	NA	< 0.003	102%	90%	110%	98%	90%	110%	107%	70%	130%
Barium	7410959	7410959	0.070	0.070	0.0%	< 0.002	99%	90%	110%	99%	90%	110%	110%	70%	130%
Beryllium	7410959	7410959	< 0.001	< 0.001	NA	< 0.001	94%	90%	110%	96%	90%	110%	98%	70%	130%
Boron	7410959	7410959	0.014	0.012	NA	< 0.010	107%	90%	110%	109%	90%	110%	111%	70%	130%
Cadmium	7410959	7410959	< 0.001	< 0.001	NA	< 0.001	100%	90%	110%	99%	90%	110%	119%	70%	130%
Chromium	7410959	7410959	0.005	0.003	NA	< 0.003	100%	90%	110%	104%	90%	110%	109%	70%	130%
Cobalt	7410959	7410959	< 0.001	< 0.001	NA	< 0.001	100%	90%	110%	101%	90%	110%	108%	70%	130%
Copper	7410959	7410959	< 0.003	< 0.003	NA	< 0.003	99%	90%	110%	102%	90%	110%	109%	70%	130%
Lead	7410959	7410959	< 0.002	< 0.002	NA	< 0.002	98%	90%	110%	94%	90%	110%	104%	70%	130%
Manganese	7410959	7410959	< 0.002	< 0.002	NA	< 0.002	98%	90%	110%	98%	90%	110%	101%	70%	130%
Mercury	7410971		<0.0001	<0.0001	NA	< 0.0001	100%	90%	110%	102%	90%	110%	102%	80%	120%
Molybdenum	7410959	7410959	< 0.002	< 0.002	NA	< 0.002	101%	90%	110%	99%	90%	110%	108%	70%	130%
Nickel	7410959	7410959	< 0.003	< 0.003	NA	< 0.003	103%	90%	110%	105%	90%	110%	111%	70%	130%

AGAT Laboratories is accredited to ISO/IEC 17025 by the Canadian Association for Laboratory Accreditation Inc. (CALA) and/or Standards Council of Canada (SCC) for specific tests listed on the scope of accreditation. AGAT Laboratories (Mississauga) is also accredited by the Canadian Association for Laboratory Accreditation Inc. (CALA) for specific drinking water tests. Accreditations are location and parameter specific. A complete listing of parameters for each location is available from www.cala.ca and/or www.scc.ca. The tests in this report may not necessarily be included in the scope of accreditation.

Results relate only to the items tested and to all the items tested

TOWN OF CALEDON
PLANNING
RECEIVED
Jul 12, 2021

AGAT Laboratories
5835 COOPERS AVENUE
MISSISSAUGA, ONTARIO
CANADA L4Z 1Y2
TEL (905)712-5100
FAX (905)712-5122
http://www.agatlabs.com

Quality Assurance

CLIENT NAME: R.J. BURNSIDE & ASSOCIATES LTD
AGAT WORK ORDER: 16T072180
PROJECT: 300033273
ATTENTION TO: Jim Baxter
SAMPLING SITE:
SAMPLED BY:MV

Water Analysis (Continued)

RPT Date: Mar 01, 2016			DUPLICATE				REFERENCE MATERIAL			METHOD BLANK SPIKE			MATRIX SPIKE		
PARAMETER	Batch	Sample Id	Dup #1	Dup #2	RPD	Method Blank	Measured Value	Acceptable Limits		Recovery	Acceptable Limits		Recovery	Acceptable Limits	
								Lower	Upper		Lower	Upper		Lower	Upper
Selenium	7410959	7410959	< 0.004	< 0.004	NA	< 0.004	99%	90%	110%	99%	90%	110%	111%	70%	130%
Silver	7410959	7410959	< 0.002	< 0.002	NA	< 0.002	102%	90%	110%	107%	90%	110%	120%	70%	130%
Strontium	7410959	7410959	0.320	0.307	4.1%	< 0.005	100%	90%	110%	98%	90%	110%	109%	70%	130%
Thallium	7410959	7410959	< 0.006	< 0.006	NA	< 0.006	104%	90%	110%	102%	90%	110%	115%	70%	130%
Tin	7410959	7410959	< 0.002	< 0.002	NA	< 0.002	98%	90%	110%	97%	90%	110%	101%	70%	130%
Titanium	7410959	7410959	< 0.002	< 0.002	NA	< 0.002	102%	90%	110%	97%	90%	110%	105%	70%	130%
Tungsten	7410959	7410959	< 0.010	< 0.010	NA	< 0.010	95%	90%	110%	95%	90%	110%	94%	70%	130%
Uranium	7410959	7410959	< 0.002	< 0.002	NA	< 0.002	100%	90%	110%	95%	90%	110%	106%	70%	130%
Vanadium	7410959	7410959	< 0.002	< 0.002	NA	< 0.002	96%	90%	110%	95%	90%	110%	103%	70%	130%
Zinc	7410959	7410959	0.022	0.021	NA	< 0.005	100%	90%	110%	103%	90%	110%	112%	70%	130%
Zirconium	7410959	7410959	< 0.004	< 0.004	NA	< 0.004	93%	90%	110%	91%	90%	110%	93%	70%	130%

Comments: NA signifies Not Applicable.
Duplicate Qualifier: As the measured result approaches the RL, the uncertainty associated with the value increases dramatically, thus duplicate acceptance limits apply only where the average of the two duplicates is greater than five times the RL.

Certified By:

AGAT Laboratories is accredited to ISO/IEC 17025 by the Canadian Association for Laboratory Accreditation Inc. (CALA) and/or Standards Council of Canada (SCC) for specific tests listed on the scope of accreditation. AGAT Laboratories (Mississauga) is also accredited by the Canadian Association for Laboratory Accreditation Inc. (CALA) for specific drinking water tests. Accreditations are location and parameter specific. A complete listing of parameters for each location is available from www.cala.ca and/or www.scc.ca. The tests in this report may not necessarily be included in the scope of accreditation.

Results relate only to the items tested and to all the items tested

TOWN OF CALEDON
PLANNING
RECEIVED
Jul 12, 2021

AGAT Laboratories
5835 COOPERS AVENUE
MISSISSAUGA, ONTARIO
CANADA L4Z 1Y2
TEL (905)712-5100
FAX (905)712-5122
http://www.agatlabs.com

Method Summary

CLIENT NAME: R.J. BURNSIDE & ASSOCIATES LTD
AGAT WORK ORDER: 16T072180
PROJECT: 300033273
ATTENTION TO: Jim Baxter
SAMPLING SITE:
SAMPLED BY:MV

PARAMETER	AGAT S.O.P	LITERATURE REFERENCE	ANALYTICAL TECHNIQUE
Water Analysis			
Nitrate as N	INOR-93-6004	SM 4110 B	ION CHROMATOGRAPH
Electrical Conductivity	INOR-93-6000	SM 2510 B	PC TITRATE
pH	INOR-93-6000	SM 4500-H+ B	PC TITRATE
Saturation pH		SM 2320 B	CALCULATION
Langelier Index		SM 2330B	CALCULATION
Total Hardness (as CaCO3)	MET-93-6105	EPA SW-846 6010C & 200.7	ICP/OES
Total Dissolved Solids	INOR-93-6028	SM 2540 C	BALANCE
Alkalinity (as CaCO3)	INOR-93-6000	SM 2320 B	PC TITRATE
Bicarbonate (as CaCO3)	INOR-93-6000	SM 2320 B	PC TITRATE
Carbonate (as CaCO3)	INOR-93-6000	SM 2320 B	PC TITRATE
Hydroxide (as CaCO3)	INOR-93-6000	SM 2320 B	PC TITRATE
Fluoride	INOR-93-6004	SM 4110 B	ION CHROMATOGRAPH
Chloride	INOR-93-6004	SM 4110 B	ION CHROMATOGRAPH
Nitrite as N	INOR-93-6004	SM 4110 B	ION CHROMATOGRAPH
Bromide	INOR-93-6004	SM 4110 B	ION CHROMATOGRAPH
Sulphate	INOR-93-6004	SM 4110 B	ION CHROMATOGRAPH
Ortho Phosphate as P	INOR-93-6004	SM 4110 B	ION CHROMATOGRAPH
Reactive Silica	INOR-93-6047	AQ2 EPA-122A & SM 4500 SiO2 D	AQ2 DISCRETE ANALYSER
Ammonia as N	INOR-93-6059	QuikChem 10-107-06-1-J & SM 4500 NH3-F	LACHAT FIA
Total Phosphorus	INOR-93-6057	QuikChem 10-115-01-3-A & SM 4500-P I	LACHAT FIA
Total Organic Carbon	INOR-93-6049	EPA 415.1 & SM 5310	SHIMADZU CARBON ANALYZER
Colour	INOR-93-6046	SM 2120 B	SPECTROPHOTOMETER
Turbidity	INOR-93-6044	SM 2130 B	NEPHELOMETER
Calcium	MET-93-6105	EPA SW-846 6010C & 200.7	ICP/OES
Magnesium	MET-93-6105	EPA SW-846 6010C & 200.7	ICP/OES
Sodium	MET-93-6105	EPA SW-846 6010C & 200.7	ICP/OES
Potassium	MET-93-6105	EPA SW-846 6010C & 200.7	ICP/OES
Aluminum	MET-93-6103	EPA SW-846 6020A & 200.8	ICP-MS
Antimony	MET-93-6103	EPA SW-846 6020A & 200.8	ICP-MS
Arsenic	MET-93-6103	EPA SW-846 6020A & 200.8	ICP-MS
Barium	MET-93-6103	EPA SW-846 6020A & 200.8	ICP-MS
Beryllium	MET-93-6103	EPA SW-846 6020A & 200.8	ICP-MS
Boron	MET-93-6103	EPA SW-846 6020A & 200.8	ICP-MS
Cadmium	MET-93-6103	EPA SW-846 6020A & 200.8	ICP-MS
Chromium	MET-93-6103	EPA SW-846 6020A & 200.8	ICP-MS
Cobalt	MET-93-6103	EPA SW-846 6020A & 200.8	ICP-MS
Copper	MET-93-6103	EPA SW-846 6020A & 200.8	ICP-MS
Iron	MET-93-6103	EPA SW-846 6020A & 200.8	ICP-MS
Lead	MET-93-6103	EPA SW-846 6020A & 200.8	ICP-MS
Manganese	MET-93-6103	EPA SW-846 6020A & 200.8	ICP-MS
Mercury	MET-93-6100	EPA SW 846 7470 & 245.1	CVAAS
Molybdenum	MET-93-6103	EPA SW-846 6020A & 200.8	ICP-MS
Nickel	MET-93-6103	EPA SW-846 6020A & 200.8	ICP-MS
Selenium	MET-93-6103	EPA SW-846 6020A & 200.8	ICP-MS
Silver	MET-93-6103	EPA SW-846 6020A & 200.8	ICP-MS
Strontium	MET-93-6103	EPA SW-846 6020A & 200.8	ICP-MS
Thallium	MET-93-6103	EPA SW-846 6020A & 200.8	ICP-MS

Results relate only to the items tested and to all the items tested

TOWN OF CALEDON
PLANNING
RECEIVED
Jul 12, 2021

AGAT Laboratories

5835 COOPERS AVENUE
MISSISSAUGA, ONTARIO
CANADA L4Z 1Y2
TEL (905)712-5100
FAX (905)712-5122
http://www.agatlabs.com

Method Summary

CLIENT NAME: R.J. BURNSIDE & ASSOCIATES LTD

AGAT WORK ORDER: 16T072180

PROJECT: 300033273

ATTENTION TO: Jim Baxter

SAMPLING SITE:

SAMPLED BY:MV

PARAMETER	AGAT S.O.P	LITERATURE REFERENCE	ANALYTICAL TECHNIQUE
Tin	MET-93-6103	EPA SW-846 6020A & 200.8	ICP-MS
Titanium	MET-93-6103	EPA SW-846 6020A & 200.8	ICP-MS
Tungsten	MET-93-6103	EPA SW-846 6020A & 200.8	ICP-MS
Uranium	MET-93-6103	EPA SW-846 6020A & 200.8	ICP-MS
Vanadium	MET-93-6103	EPA SW-846 6020A & 200.8	ICP-MS
Zinc	MET-93-6103	EPA SW-846 6020A & 200.8	ICP-MS
Zirconium	MET-93-6103	EPA SW-846 6020A & 200.8	ICP-MS
% Difference/ Ion Balance		SM 1030 E	CALCULATION

Results relate only to the items tested and to all the items tested

AGAT Laboratories
5835 Coopers Avenue
Mississauga, Ontario L4Z 1Y2
Ph: 905.712.5100 Fax: 905.712.5122
webearth.agatlabs.com

Chain of Custody Record

If this is a Drinking Water sample, please use Drinking Water Chain of Custody Form (potable water intended for human consumption)

Laboratory Use Only

Work Order #: 16T072180

Cooler Quantity:

Arrival Temperatures: 8.0 | 8.1 | 8.5

LAB 29 | 176 | 174

Custody Seal Intact: ☐ Yes ☐ No ☐ N/A

Notes:

Report Information:

Company: RJ Burnside & Associates Limited

Contact: Jim Baxter

Address: 292 Speedvale Ave. West, Unit 20
Guelph, ONT

Phone: 519-823-4995 Fax:

Reports to be sent to:

1. Email: jim.baxter@rjburnside.com

2. Email:

Regulatory Requirements:

☐ No Regulatory Requirement

(Please check all applicable boxes)

☐ Regulation 153/04
Table ____ (Indicate One)
☐ Ind/Com
☐ Res/Park
☐ Agriculture
Soil Texture (Check One)
☐ Coarse
☐ Fine

☐ Sewer Use
☐ Sanitary
☐ Storm
Region ____ (Indicate One)

☐ Regulation 558
☐ CCME
☐ Prov. Water Quality Objectives (PWQO)
☐ Other
(Indicate One)

Turnaround Time (TAT) Required:

Regular TAT ☐ 5 to 7 Business Days

Rush TAT (Rush Surcharges Apply)

☐ 3 Business Days ☐ 2 Business Days ☒ 1 Business Day

OR Date Required (Rush Surcharges May Apply):

Please provide prior notification for rush TAT

**TAT is exclusive of weekends and statutory holidays*

Project Information:

Project: 300033273

Site Location: Bel Fountain

Sampled By: Matt Valeriote

AGAT Quote #: PO:

Please note: If quotation number is not provided, client will be billed full price for analysis

Is this submission for a **Record of Site Condition?** ☐ Yes ☒ No

Report Guideline on *Certificate of Analysis* ☐ Yes ☒ No

Invoice Information:

Bill To Same: Yes ☐ No ☐

Company:

Contact:

Address:

Email:

Sample Matrix Legend

B	Biota
GW	Ground Water
O	Oil
P	Paint
S	Soil
SD	Sediment
SW	Surface Water

Sample Identification	Date Sampled	Time Sampled	# of Containers	Sample Matrix	Comments/ Special Instructions	Metals and Inorganics	Metal Scan	Hydride Forming Metals	Client Custom Metals	(Check Applicable) ORPs: ☐ B-HWS ☐ Cl ☐ CN ☐ Cr^{6+} ☐ EC ☐ FOC ☐ NO_3/NO_2 ☐ Total N ☐ Hg ☐ pH ☐ SAR	Nutrients: ☐ TP ☐ NH_3 ☐ TKN ☐ NO_3 ☐ NO_2 ☐ NO_3/NO_2	Volatiles: ☐ VOC ☐ BTEX ☐ THM	CCME Fractions 1 to 4	ABNs	PAHs	Chlorophenols	PCBs	Organochlorine Pesticides	TCLP Metals/Inorganics	Sewer Use	Nitrate	MWRA
TW9N	Feb.26.16	9:50	1	GW																X	
TW9	Feb.26.2016	11:40	6	GW																	X

Samples Relinquished By (Print Name and Sign): Matt Valeriote — Date: Feb.26.2016 — Time:

Samples Relinquished By (Print Name and Sign): — Date: — Time:

Samples Received By (Print Name and Sign): Ranji Singh — Date: 26 Feb 2016 — Time: 1:00 PM

Samples Received By (Print Name and Sign): Sima — Date: 29/2/16 — Time: 7:24

Page 1 of 1

N°: T 021169

Pink Copy - Client | Yellow Copy - AGAT | White Copy- AGAT

Document ID: DW-75-1011-010

Date Issued: November 2, 2015

TOWN OF CALEDON
PLANNING
RECEIVED
Jul 13 2021

TOWN OF CALEDON
PLANNING
RECEIVED
Jul 12, 2021

AGAT Laboratories

5835 COOPERS AVENUE
MISSISSAUGA, ONTARIO
CANADA L4Z 1Y2
TEL (905)712-5100
FAX (905)712-5122
http://www.agatlabs.com

CLIENT NAME: R.J. BURNSIDE & ASSOCIATES LTD
292 Speedvale Avenue West, Unit 7
Guelph, ON N1H1C4
(519) 823-4995

ATTENTION TO: Jim Baxter

PROJECT: 300033273

AGAT WORK ORDER: 16T072717

WATER ANALYSIS REVIEWED BY: Anthony Dapaah, PhD (Chem), Inorganic Lab Manager

DATE REPORTED: Mar 01, 2016

PAGES (INCLUDING COVER): 9

VERSION*: 2

Should you require any information regarding this analysis please contact your client services representative at (905) 712-5100

*NOTES
VERSION 2:Revised Report: Reactive Silica results corrected.

All samples will be disposed of within 30 days following analysis. Please contact the lab if you require additional sample storage time.

Member of: Association of Professional Engineers, Geologists and Geophysicists of Alberta (APEGGA)
Western Enviro-Agricultural Laboratory Association (WEALA)
Environmental Services Association of Alberta (ESAA)

AGAT Laboratories is accredited to ISO/IEC 17025 by the Canadian Association for Laboratory Accreditation Inc. (CALA) and/or Standards Council of Canada (SCC) for specific tests listed on the scope of accreditation. AGAT Laboratories (Mississauga) is also accredited by the Canadian Association for Laboratory Accreditation Inc. (CALA) for specific drinking water tests. Accreditations are location and parameter specific. A complete listing of parameters for each location is available from www.cala.ca and/or www.scc.ca. The tests in this report may not necessarily be included in the scope of accreditation.

Results relate only to the items tested and to all the items tested
All reportable information as specified by ISO 17025:2005 is available from AGAT Laboratories upon request

TOWN OF CALEDON
PLANNING
RECEIVED

Jul 12, 2021

AGAT Laboratories

5835 COOPERS AVENUE
MISSISSAUGA, ONTARIO
CANADA L4Z 1Y2
TEL (905)712-5100
FAX (905)712-5122
http://www.agatlabs.com

Certificate of Analysis

AGAT WORK ORDER: 16T072717

PROJECT: 300033273

CLIENT NAME: R.J. BURNSIDE & ASSOCIATES LTD

ATTENTION TO: Jim Baxter

SAMPLING SITE:

SAMPLED BY:

Nitrate (Water)

DATE RECEIVED: 2016-02-29

DATE REPORTED: 2016-03-01

			SAMPLE DESCRIPTION:	TW11N
			SAMPLE TYPE:	Water
			DATE SAMPLED:	2/29/2016
Parameter	Unit	G / S	RDL	7413121
Nitrate as N	mg/L		0.10	4.61

Comments: RDL - Reported Detection Limit; G / S - Guideline / Standard

7413121 Elevated RDL indicates the degree of sample dilution prior to the analysis in order to keep analyte within the calibration range of the instrument and to reduce matrix interference.

Certified By:

Results relate only to the items tested and to all the items tested

TOWN OF CALEDON
PLANNING
RECEIVED
Jul 12, 2021

AGAT Laboratories

5835 COOPERS AVENUE
MISSISSAUGA, ONTARIO
CANADA L4Z 1Y2
TEL (905)712-5100
FAX (905)712-5122
http://www.agatlabs.com

Certificate of Analysis

AGAT WORK ORDER: 16T072717
PROJECT: 300033273

CLIENT NAME: R.J. BURNSIDE & ASSOCIATES LTD
ATTENTION TO: Jim Baxter
SAMPLING SITE:
SAMPLED BY:

Water Quality Assessment

DATE RECEIVED: 2016-02-29
DATE REPORTED: 2016-03-01

		SAMPLE DESCRIPTION:		TW11N
		SAMPLE TYPE:		Water
		DATE SAMPLED:		2/29/2016
Parameter	Unit	G / S	RDL	7413129
Electrical Conductivity	uS/cm		2	607
pH	pH Units		NA	8.00
Saturation pH				6.95
Langelier Index				1.05
Total Hardness (as CaCO3)	mg/L		0.5	303
Total Dissolved Solids	mg/L		20	326
Alkalinity (as CaCO3)	mg/L		5	267
Bicarbonate (as CaCO3)	mg/L		5	267
Carbonate (as CaCO3)	mg/L		5	<5
Hydroxide (as CaCO3)	mg/L		5	<5
Fluoride	mg/L		0.10	<0.10
Chloride	mg/L		0.20	12.8
Nitrate as N	mg/L		0.10	4.58
Nitrite as N	mg/L		0.10	<0.10
Bromide	mg/L		0.10	<0.10
Sulphate	mg/L		0.20	21.3
Ortho Phosphate as P	mg/L		0.20	<0.20
Reactive Silica	mg/L		0.10	8.05
Ammonia as N	mg/L		0.02	<0.02
Total Phosphorus	mg/L		0.05	<0.05
Total Organic Carbon	mg/L		0.5	0.7
Colour	TCU		5	<5
Turbidity	NTU		0.5	2.9
Calcium	mg/L		0.05	81.7
Magnesium	mg/L		0.05	24.0
Sodium	mg/L		0.05	5.39
Potassium	mg/L		0.05	1.01
Aluminum	mg/L		0.004	<0.004
Antimony	mg/L		0.003	<0.003
Arsenic	mg/L		0.003	<0.003

Certified By:

Results relate only to the items tested and to all the items tested

TOWN OF CALEDON
PLANNING
RECEIVED
Jul 12, 2021

AGAT Laboratories

5835 COOPERS AVENUE
MISSISSAUGA, ONTARIO
CANADA L4Z 1Y2
TEL (905)712-5100
FAX (905)712-5122
http://www.agatlabs.com

Certificate of Analysis

AGAT WORK ORDER: 16T072717
PROJECT: 300033273

CLIENT NAME: R.J. BURNSIDE & ASSOCIATES LTD
ATTENTION TO: Jim Baxter
SAMPLING SITE:
SAMPLED BY:

Water Quality Assessment

DATE RECEIVED: 2016-02-29
DATE REPORTED: 2016-03-01

		SAMPLE DESCRIPTION:		TW11N
		SAMPLE TYPE:		Water
		DATE SAMPLED:		2/29/2016
Parameter	Unit	G / S	RDL	7413129
Barium	mg/L		0.002	0.060
Beryllium	mg/L		0.001	<0.001
Boron	mg/L		0.010	<0.010
Cadmium	mg/L		0.001	<0.001
Chromium	mg/L		0.003	< 0.003
Cobalt	mg/L		0.001	<0.001
Copper	mg/L		0.003	<0.003
Iron	mg/L		0.010	< 0.010
Lead	mg/L		0.002	<0.002
Manganese	mg/L		0.002	<0.002
Mercury	mg/L		0.0001	<0.0001
Molybdenum	mg/L		0.002	<0.002
Nickel	mg/L		0.003	<0.003
Selenium	mg/L		0.004	<0.004
Silver	mg/L		0.002	<0.002
Strontium	mg/L		0.005	0.132
Thallium	mg/L		0.006	<0.006
Tin	mg/L		0.002	<0.002
Titanium	mg/L		0.002	<0.002
Tungsten	mg/L		0.010	<0.010
Uranium	mg/L		0.002	<0.002
Vanadium	mg/L		0.002	<0.002
Zinc	mg/L		0.005	0.013
Zirconium	mg/L		0.004	<0.004
% Difference/ Ion Balance	%		NA	1.24

Comments: RDL - Reported Detection Limit; G / S - Guideline / Standard

7413129 Elevated RDL indicates the degree of sample dilution prior to the analysis in order to keep analyte within the calibration range of the instrument and to reduce matrix interference.
Revised March 04, 2016.
Revision: This report replaces the Certificate of Analysis issued on March 01, 2016. The Certificate of analysis has been updated to correct the erroneous Reactive Silica value reported.The discrepancy was due to sampling error during the analysis.

Certified By:

Results relate only to the items tested and to all the items tested

TOWN OF CALEDON
PLANNING
RECEIVED
Jul 12, 2021

AGAT Laboratories

5835 COOPERS AVENUE
MISSISSAUGA, ONTARIO
CANADA L4Z 1Y2
TEL (905)712-5100
FAX (905)712-5122
http://www.agatlabs.com

Quality Assurance

CLIENT NAME: R.J. BURNSIDE & ASSOCIATES LTD

AGAT WORK ORDER: 16T072717

PROJECT: 300033273

ATTENTION TO: Jim Baxter

SAMPLING SITE:

SAMPLED BY:

Water Analysis

RPT Date: Mar 01, 2016			DUPLICATE				REFERENCE MATERIAL			METHOD BLANK SPIKE			MATRIX SPIKE		
PARAMETER	Batch	Sample Id	Dup #1	Dup #2	RPD	Method Blank	Measured Value	Acceptable Limits		Recovery	Acceptable Limits		Recovery	Acceptable Limits	
								Lower	Upper		Lower	Upper		Lower	Upper
Water Quality Assessment															
Electrical Conductivity	7412084		754	750	0.5%	< 2	102%	80%	120%	NA			NA		
pH	7412084		7.74	7.79	0.6%	NA	100%	90%	110%	NA			NA		
Total Dissolved Solids	7413129	7413129	326	324	0.6%	< 20	96%	80%	120%	NA			NA		
Alkalinity (as CaCO3)	7412084		103	103	0.0%	< 5	100%	80%	120%	NA			NA		
Bicarbonate (as CaCO3)	7412084		103	103	0.0%	< 5	NA			NA			NA		
Carbonate (as CaCO3)	7412084		<5	<5	NA	< 5	NA			NA			NA		
Hydroxide (as CaCO3)	7412084		<5	<5	NA	< 5	NA			NA			NA		
Fluoride	7413121	7413121	<0.10	<0.10	NA	< 0.05	106%	90%	110%	100%	90%	110%	104%	80%	120%
Chloride	7413121	7413121	12.9	13.1	1.5%	< 0.10	102%	90%	110%	107%	90%	110%	102%	80%	120%
Nitrate as N	7413121	7413121	4.61	4.67	1.3%	< 0.05	93%	90%	110%	104%	90%	110%	89%	80%	120%
Nitrite as N	7413121	7413121	<0.10	<0.10	NA	< 0.05	NA	90%	110%	107%	90%	110%	101%	80%	120%
Bromide	7413121	7413121	<0.10	<0.10	NA	< 0.05	102%	90%	110%	109%	90%	110%	100%	80%	120%
Sulphate	7413121	7413121	21.9	22.2	1.4%	< 0.10	94%	90%	110%	106%	90%	110%	94%	80%	120%
Ortho Phosphate as P	7413121	7413121	<0.20	<0.20	NA	< 0.10	93%	90%	110%	100%	90%	110%	100%	80%	120%
Reactive Silica	7402270		1.97	2.00	1.5%	< 0.05	98%	90%	110%	99%	90%	110%	93%	80%	120%
Ammonia as N	7413129	7413129	<0.02	<0.02	NA	< 0.02	92%	90%	110%	101%	90%	110%	89%	80%	120%
Total Phosphorus	7410959		<0.05	<0.05	NA	< 0.05	102%	80%	120%	103%	90%	110%	102%	70%	130%
Total Organic Carbon	7413129	7413129	0.7	0.7	NA	< 0.5	98%	90%	110%	98%	90%	110%	102%	80%	120%
Colour	7413129	7413129	<5	<5	NA	< 5	100%	90%	110%	NA			NA		
Turbidity	7413129	7413129	2.9	3.0	3.4%	< 0.5	101%	90%	110%	NA			NA		
Calcium	7413129	7413129	81.7	82.2	0.6%	< 0.05	103%	90%	110%	103%	90%	110%	101%	70%	130%
Magnesium	7413129	7413129	24.0	24.0	0.0%	< 0.05	98%	90%	110%	97%	90%	110%	100%	70%	130%
Sodium	7413129	7413129	5.39	5.28	2.1%	< 0.05	101%	90%	110%	100%	90%	110%	100%	70%	130%
Potassium	7413129	7413129	1.01	1.01	0.0%	< 0.05	100%	90%	110%	100%	90%	110%	100%	70%	130%
Aluminum	7413129	7413129	< 0.004	< 0.004	NA	< 0.004	100%	90%	110%	101%	90%	110%	103%	70%	130%
Antimony	7413129	7413129	< 0.003	< 0.003	NA	< 0.003	95%	90%	110%	95%	90%	110%	96%	70%	130%
Arsenic	7413129	7413129	< 0.003	< 0.003	NA	< 0.003	99%	90%	110%	97%	90%	110%	108%	70%	130%
Barium	7413129	7413129	0.060	0.058	3.4%	< 0.002	100%	90%	110%	103%	90%	110%	101%	70%	130%
Beryllium	7413129	7413129	< 0.001	< 0.001	NA	< 0.001	104%	90%	110%	105%	90%	110%	112%	70%	130%
Boron	7413129	7413129	< 0.010	< 0.010	NA	< 0.010	101%	90%	110%	101%	90%	110%	109%	70%	130%
Cadmium	7413129	7413129	< 0.001	< 0.001	NA	< 0.001	97%	90%	110%	93%	90%	110%	110%	70%	130%
Chromium	7413129	7413129	< 0.003	< 0.003	NA	< 0.003	100%	90%	110%	96%	90%	110%	101%	70%	130%
Cobalt	7413129	7413129	< 0.001	< 0.001	NA	< 0.001	96%	90%	110%	97%	90%	110%	98%	70%	130%
Copper	7413129	7413129	< 0.003	< 0.003	NA	< 0.003	99%	90%	110%	99%	90%	110%	98%	70%	130%
Lead	7413129	7413129	< 0.002	< 0.002	NA	< 0.002	99%	90%	110%	97%	90%	110%	96%	70%	130%
Manganese	7413129	7413129	< 0.002	< 0.002	NA	< 0.002	100%	90%	110%	97%	90%	110%	98%	70%	130%
Mercury	7413129	7413129	<0.0001	<0.0001	NA	< 0.0001	101%	90%	110%	103%	90%	110%	100%	80%	120%
Molybdenum	7413129	7413129	< 0.002	< 0.002	NA	< 0.002	96%	90%	110%	91%	90%	110%	98%	70%	130%
Nickel	7413129	7413129	< 0.003	< 0.003	NA	< 0.003	98%	90%	110%	99%	90%	110%	99%	70%	130%

AGAT Laboratories is accredited to ISO/IEC 17025 by the Canadian Association for Laboratory Accreditation Inc. (CALA) and/or Standards Council of Canada (SCC) for specific tests listed on the scope of accreditation. AGAT Laboratories (Mississauga) is also accredited by the Canadian Association for Laboratory Accreditation Inc. (CALA) for specific drinking water tests. Accreditations are location and parameter specific. A complete listing of parameters for each location is available from www.cala.ca and/or www.scc.ca. The tests in this report may not necessarily be included in the scope of accreditation.

Results relate only to the items tested and to all the items tested

TOWN OF CALEDON
PLANNING
RECEIVED
Jul 12, 2021

AGAT Laboratories
5835 COOPERS AVENUE
MISSISSAUGA, ONTARIO
CANADA L4Z 1Y2
TEL (905)712-5100
FAX (905)712-5122
http://www.agatlabs.com

Quality Assurance

CLIENT NAME: R.J. BURNSIDE & ASSOCIATES LTD
AGAT WORK ORDER: 16T072717
PROJECT: 300033273
ATTENTION TO: Jim Baxter
SAMPLING SITE:
SAMPLED BY:

Water Analysis (Continued)

RPT Date: Mar 01, 2016			DUPLICATE				REFERENCE MATERIAL			METHOD BLANK SPIKE			MATRIX SPIKE		
PARAMETER	Batch	Sample Id	Dup #1	Dup #2	RPD	Method Blank	Measured Value	Acceptable Limits		Recovery	Acceptable Limits		Recovery	Acceptable Limits	
								Lower	Upper		Lower	Upper		Lower	Upper
Selenium	7413129	7413129	< 0.004	< 0.004	NA	< 0.004	97%	90%	110%	98%	90%	110%	111%	70%	130%
Silver	7413129	7413129	< 0.002	< 0.002	NA	< 0.002	99%	90%	110%	104%	90%	110%	111%	70%	130%
Strontium	7413129	7413129	0.132	0.130	1.5%	< 0.005	99%	90%	110%	96%	90%	110%	100%	70%	130%
Thallium	7413129	7413129	< 0.006	< 0.006	NA	< 0.006	103%	90%	110%	101%	90%	110%	100%	70%	130%
Tin	7413129	7413129	< 0.002	< 0.002	NA	< 0.002	100%	90%	110%	97%	90%	110%	95%	70%	130%
Titanium	7413129	7413129	< 0.002	< 0.002	NA	< 0.002	97%	90%	110%	93%	90%	110%	95%	70%	130%
Tungsten	7413129	7413129	< 0.010	< 0.010	NA	< 0.010	96%	90%	110%	92%	90%	110%	96%	70%	130%
Uranium	7413129	7413129	< 0.002	< 0.002	NA	< 0.002	99%	90%	110%	95%	90%	110%	92%	70%	130%
Vanadium	7413129	7413129	< 0.002	< 0.002	NA	< 0.002	93%	90%	110%	93%	90%	110%	94%	70%	130%
Zinc	7413129	7413129	0.013	0.012	NA	< 0.005	99%	90%	110%	99%	90%	110%	99%	70%	130%
Zirconium	7413129	7413129	< 0.004	< 0.004	NA	< 0.004	98%	90%	110%	94%	90%	110%	91%	70%	130%

Comments: NA signifies Not Applicable.
Duplicate Qualifier: As the measured result approaches the RL, the uncertainty associated with the value increases dramatically, thus duplicate acceptance limits apply only where the average of the two duplicates is greater than five times the RL.

Certified By:

AGAT Laboratories is accredited to ISO/IEC 17025 by the Canadian Association for Laboratory Accreditation Inc. (CALA) and/or Standards Council of Canada (SCC) for specific tests listed on the scope of accreditation. AGAT Laboratories (Mississauga) is also accredited by the Canadian Association for Laboratory Accreditation Inc. (CALA) for specific drinking water tests. Accreditations are location and parameter specific. A complete listing of parameters for each location is available from www.cala.ca and/or www.scc.ca. The tests in this report may not necessarily be included in the scope of accreditation.

Results relate only to the items tested and to all the items tested

TOWN OF CALEDON
PLANNING
RECEIVED
Jul 12, 2021

AGAT Laboratories
5835 COOPERS AVENUE
MISSISSAUGA, ONTARIO
CANADA L4Z 1Y2
TEL (905)712-5100
FAX (905)712-5122
http://www.agatlabs.com

Method Summary

CLIENT NAME: R.J. BURNSIDE & ASSOCIATES LTD

AGAT WORK ORDER: 16T072717

PROJECT: 300033273

ATTENTION TO: Jim Baxter

SAMPLING SITE:

SAMPLED BY:

PARAMETER	AGAT S.O.P	LITERATURE REFERENCE	ANALYTICAL TECHNIQUE
Water Analysis			
Nitrate as N	INOR-93-6004	SM 4110 B	ION CHROMATOGRAPH
Electrical Conductivity	INOR-93-6000	SM 2510 B	PC TITRATE
pH	INOR-93-6000	SM 4500-H+ B	PC TITRATE
Saturation pH		SM 2320 B	CALCULATION
Langelier Index		SM 2330B	CALCULATION
Total Hardness (as CaCO3)	MET-93-6105	EPA SW-846 6010C & 200.7	ICP/OES
Total Dissolved Solids	INOR-93-6028	SM 2540 C	BALANCE
Alkalinity (as CaCO3)	INOR-93-6000	SM 2320 B	PC TITRATE
Bicarbonate (as CaCO3)	INOR-93-6000	SM 2320 B	PC TITRATE
Carbonate (as CaCO3)	INOR-93-6000	SM 2320 B	PC TITRATE
Hydroxide (as CaCO3)	INOR-93-6000	SM 2320 B	PC TITRATE
Fluoride	INOR-93-6004	SM 4110 B	ION CHROMATOGRAPH
Chloride	INOR-93-6004	SM 4110 B	ION CHROMATOGRAPH
Nitrite as N	INOR-93-6004	SM 4110 B	ION CHROMATOGRAPH
Bromide	INOR-93-6004	SM 4110 B	ION CHROMATOGRAPH
Sulphate	INOR-93-6004	SM 4110 B	ION CHROMATOGRAPH
Ortho Phosphate as P	INOR-93-6004	SM 4110 B	ION CHROMATOGRAPH
Reactive Silica	INOR-93-6047	AQ2 EPA-122A & SM 4500 SiO2 D	AQ2 DISCRETE ANALYSER
Ammonia as N	INOR-93-6059	QuikChem 10-107-06-1-J & SM 4500 NH3-F	LACHAT FIA
Total Phosphorus	INOR-93-6057	QuikChem 10-115-01-3-A & SM 4500-P I	LACHAT FIA
Total Organic Carbon	INOR-93-6049	EPA 415.1 & SM 5310	SHIMADZU CARBON ANALYZER
Colour	INOR-93-6046	SM 2120 B	SPECTROPHOTOMETER
Turbidity	INOR-93-6044	SM 2130 B	NEPHELOMETER
Calcium	MET-93-6105	EPA SW-846 6010C & 200.7	ICP/OES
Magnesium	MET-93-6105	EPA SW-846 6010C & 200.7	ICP/OES
Sodium	MET-93-6105	EPA SW-846 6010C & 200.7	ICP/OES
Potassium	MET-93-6105	EPA SW-846 6010C & 200.7	ICP/OES
Aluminum	MET-93-6103	EPA SW-846 6020A & 200.8	ICP-MS
Antimony	MET-93-6103	EPA SW-846 6020A & 200.8	ICP-MS
Arsenic	MET-93-6103	EPA SW-846 6020A & 200.8	ICP-MS
Barium	MET-93-6103	EPA SW-846 6020A & 200.8	ICP-MS
Beryllium	MET-93-6103	EPA SW-846 6020A & 200.8	ICP-MS
Boron	MET-93-6103	EPA SW-846 6020A & 200.8	ICP-MS
Cadmium	MET-93-6103	EPA SW-846 6020A & 200.8	ICP-MS
Chromium	MET-93-6103	EPA SW-846 6020A & 200.8	ICP-MS
Cobalt	MET-93-6103	EPA SW-846 6020A & 200.8	ICP-MS
Copper	MET-93-6103	EPA SW-846 6020A & 200.8	ICP-MS
Iron	MET-93-6103	EPA SW-846 6020A & 200.8	ICP-MS
Lead	MET-93-6103	EPA SW-846 6020A & 200.8	ICP-MS
Manganese	MET-93-6103	EPA SW-846 6020A & 200.8	ICP-MS
Mercury	MET-93-6100	EPA SW 846 7470 & 245.1	CVAAS
Molybdenum	MET-93-6103	EPA SW-846 6020A & 200.8	ICP-MS
Nickel	MET-93-6103	EPA SW-846 6020A & 200.8	ICP-MS
Selenium	MET-93-6103	EPA SW-846 6020A & 200.8	ICP-MS
Silver	MET-93-6103	EPA SW-846 6020A & 200.8	ICP-MS
Strontium	MET-93-6103	EPA SW-846 6020A & 200.8	ICP-MS
Thallium	MET-93-6103	EPA SW-846 6020A & 200.8	ICP-MS

Results relate only to the items tested and to all the items tested

TOWN OF CALEDON
PLANNING
RECEIVED
Jul 12, 2021

AGAT Laboratories
5835 COOPERS AVENUE
MISSISSAUGA, ONTARIO
CANADA L4Z 1Y2
TEL (905)712-5100
FAX (905)712-5122
http://www.agatlabs.com

Method Summary

CLIENT NAME: R.J. BURNSIDE & ASSOCIATES LTD

AGAT WORK ORDER: 16T072717

PROJECT: 300033273

ATTENTION TO: Jim Baxter

SAMPLING SITE:

SAMPLED BY:

PARAMETER	AGAT S.O.P	LITERATURE REFERENCE	ANALYTICAL TECHNIQUE
Tin	MET-93-6103	EPA SW-846 6020A & 200.8	ICP-MS
Titanium	MET-93-6103	EPA SW-846 6020A & 200.8	ICP-MS
Tungsten	MET-93-6103	EPA SW-846 6020A & 200.8	ICP-MS
Uranium	MET-93-6103	EPA SW-846 6020A & 200.8	ICP-MS
Vanadium	MET-93-6103	EPA SW-846 6020A & 200.8	ICP-MS
Zinc	MET-93-6103	EPA SW-846 6020A & 200.8	ICP-MS
Zirconium	MET-93-6103	EPA SW-846 6020A & 200.8	ICP-MS
% Difference/ Ion Balance		SM 1030 E	CALCULATION

Results relate only to the items tested and to all the items tested

AGAT Laboratories
5835 Coopers Avenue
Mississauga, Ontario L4Z 1Y2
Ph: 905.712.5100 Fax: 905.712.5122
webearth.agatlabs.com

Chain of Custody Record

If this is a Drinking Water sample, please use Drinking Water Chain of Custody Form (potable water intended for human consumption)

Report Information:

Company: RJ Burnside & Associates Limited
Contact: Tim Baxter
Address: 292 Speedvale Ave. West, unit 2b
Guelph, Ont
Phone: 519-823-4995 Fax:
Reports to be sent to:
1. Email: jim.baxter@rjburnside.com
2. Email:

Regulatory Requirements:

☐ No Regulatory Requirement
(Please check all applicable boxes)

☐ Regulation 153/04
Table ____ *Indicate One*
☐ Ind/Com
☐ Res/Park
☐ Agriculture
Soil Texture *(Check One)*
☐ Coarse
☐ Fine

☐ Sewer Use
☐ Sanitary
☐ Storm
Region ____ *Indicate One*

☐ Regulation 558
☐ CCME
☐ Prov. Water Quality Objectives (PWQO)
☐ Other
Indicate One

Is this submission for a **Record of Site Condition?** ☐ Yes ☒ No

Report Guideline on *Certificate of Analysis* ☐ Yes ☒ No

Laboratory Use Only

Work Order #: 16T072717
Cooler Quantity:
Arrival Temperatures: 7.8 | 7.9 | 7.9
CAD 5° | 6° | 6°
Custody Seal Intact: ☐Yes ☐No ☐N/A
Notes: on ice

Turnaround Time (TAT) Required:

Regular TAT ☐ 5 to 7 Business Days
Rush TAT (Rush Surcharges Apply) RUSH

☐ 3 Business Days ☐ 2 Business Days ☒ 1 Business Day

OR Date Required (Rush Surcharges May Apply):

Please provide prior notification for rush TAT
**TAT is exclusive of weekends and statutory holidays*

Project Information:

Project: 3000033273
Site Location: Bel Fountain
Sampled By: Matt Valeriote
AGAT Quote #: PO:
Please note: If quotation number is not provided, client will be billed full price for analysis.

Invoice Information:

Bill To Same: Yes ☐ No ☐
Company:
Contact:
Address:
Email:

Sample Matrix Legend

B	Biota
GW	Ground Water
O	Oil
P	Paint
S	Soil
SD	Sediment
SW	Surface Water

Sample Identification	Date Sampled	Time Sampled	# of Containers	Sample Matrix	Comments/ Special Instructions	Metals and Inorganics	Metal Scan	Hydride Forming Metals	Client Custom Metals	(Check Applicable) ORPs: ☐B-HWS ☐Cl⁻ ☐CN⁻ ☐Cr⁶⁺ ☐EC ☐FOC ☐NO_3/NO_2 ☐Total N ☐Hg ☐pH ☐SAR	Nutrients: ☐TP ☐NH_3 ☐TKN ☐NO_3 ☐NO_2 ☐NO_3/NO_2	Volatiles: ☐VOC ☐BTEX ☐THM	CCME Fractions 1 to 4	ABNs	PAHs	Chlorophenols	PCBs	Organochlorine Pesticides	TCLP Metals/Inorganics	Sewer Use	X Nitrates	X MWQA							
TW11N	Feb. 29, 2016	11:00	1	GW																				X								
TW11	Feb. 29, 2016	12:51	6	GW																					X							

Samples Relinquished By (Print Name and Sign): Matt Valeriote / [signature] Date: Feb. 29, 2016 Time:
Samples Received By (Print Name and Sign): M. Kelly Maggie Kelly Date: 16/2/29 Time: 2:25 pm Page 1 of 1
Samples Relinquished By (Print Name and Sign): Date: Time:
Samples Received By (Print Name and Sign): [signature] Date: 1/3/16 Time: 9:14 N°: T014312

Document ID: DW-76-1511-009

Pink Copy - Client | Yellow Copy - AGAT | White Copy- AGAT

Date Issued: Jan 9, 2015

TOWN OF CALEDON
PLANNING
RECEIVED
Jul 11, 2024

TOWN OF CALEDON
PLANNING
RECEIVED
Jul 12, 2021

AGAT Laboratories

5835 COOPERS AVENUE
MISSISSAUGA, ONTARIO
CANADA L4Z 1Y2
TEL (905)712-5100
FAX (905)712-5122
http://www.agatlabs.com

CLIENT NAME: R.J. BURNSIDE & ASSOCIATES LTD
292 Speedvale Avenue West, Unit 7
Guelph, ON N1H1C4
(519) 823-4995

ATTENTION TO: Dwight Smikle

PROJECT: 300033273

AGAT WORK ORDER: 16T101841

WATER ANALYSIS REVIEWED BY: Mike Muneswar, BSc (Chem), Senior Inorganic Analyst

DATE REPORTED: Jun 17, 2016

PAGES (INCLUDING COVER): 8

VERSION*: 1

Should you require any information regarding this analysis please contact your client services representative at (905) 712-5100

*NOTES

All samples will be disposed of within 30 days following analysis. Please contact the lab if you require additional sample storage time.

Member of: Association of Professional Engineers, Geologists and Geophysicists of Alberta (APEGGA)
Western Enviro-Agricultural Laboratory Association (WEALA)
Environmental Services Association of Alberta (ESAA)

AGAT Laboratories is accredited to ISO/IEC 17025 by the Canadian Association for Laboratory Accreditation Inc. (CALA) and/or Standards Council of Canada (SCC) for specific tests listed on the scope of accreditation. AGAT Laboratories (Mississauga) is also accredited by the Canadian Association for Laboratory Accreditation Inc. (CALA) for specific drinking water tests. Accreditations are location and parameter specific. A complete listing of parameters for each location is available from www.cala.ca and/or www.scc.ca. The tests in this report may not necessarily be included in the scope of accreditation.

Results relate only to the items tested and to all the items tested
All reportable information as specified by ISO 17025:2005 is available from AGAT Laboratories upon request

TOWN OF CALEDON
PLANNING
RECEIVED
Jul 12, 2021

AGAT Laboratories

5835 COOPERS AVENUE
MISSISSAUGA, ONTARIO
CANADA L4Z 1Y2
TEL (905)712-5100
FAX (905)712-5122
http://www.agatlabs.com

Certificate of Analysis

AGAT WORK ORDER: 16T101841
PROJECT: 300033273

CLIENT NAME: R.J. BURNSIDE & ASSOCIATES LTD
ATTENTION TO: Dwight Smikle
SAMPLING SITE:
SAMPLED BY:

Water Quality Assessment - Groundwater Samples

DATE RECEIVED: 2016-06-06
DATE REPORTED: 2016-06-08

		SAMPLE DESCRIPTION:		TW2	TW6	TW5	TW8	TW9	TW11
		SAMPLE TYPE:		Water	Water	Water	Water	Water	Water
		DATE SAMPLED:		6/2/2016	6/2/2016	6/2/2016	6/2/2016	6/2/2016	6/2/2016
Parameter	Unit	G / S	RDL	7607710	7607713	7607719	7607726	7607733	7607739
Electrical Conductivity	uS/cm		2	526	585	606	627	601	572
pH	pH Units		NA	8.03	8.07	8.10	8.17	8.10	8.08
Saturation pH				6.97	6.96	6.99	6.95	6.95	6.95
Langelier Index				1.06	1.11	1.11	1.22	1.15	1.13
Total Hardness (as CaCO3)	mg/L		0.5	276	303	298	324	314	289
Total Dissolved Solids	mg/L		20	290	326	326	358	334	300
Alkalinity (as CaCO3)	mg/L		5	264	261	251	251	257	262
Bicarbonate (as CaCO3)	mg/L		5	264	261	251	251	257	262
Carbonate (as CaCO3)	mg/L		5	<5	<5	<5	<5	<5	<5
Hydroxide (as CaCO3)	mg/L		5	<5	<5	<5	<5	<5	<5
Fluoride	mg/L		0.10	<0.10	<0.10	<0.10	<0.10	<0.10	<0.10
Chloride	mg/L		0.20	5.59	15.2	24.3	11.0	9.32	18.4
Nitrate as N	mg/L		0.10	1.18	6.32	6.72	5.35	2.99	3.00
Nitrite as N	mg/L		0.10	<0.10	<0.10	<0.10	<0.10	<0.10	<0.10
Bromide	mg/L		0.10	<0.10	<0.10	<0.10	<0.10	<0.10	<0.10
Sulphate	mg/L		0.20	19.0	16.4	16.8	58.0	50.5	17.3
Ortho Phosphate as P	mg/L		0.20	<0.20	<0.20	<0.20	<0.20	<0.20	<0.20
Reactive Silica	mg/L		0.05	9.90	7.14	7.49	7.75	8.60	7.67
Ammonia as N	mg/L		0.02	<0.02	<0.02	<0.02	<0.02	<0.02	<0.02
Total Phosphorus	mg/L		0.05	<0.05	<0.05	<0.05	0.05	<0.05	<0.05
Total Organic Carbon	mg/L		0.5	0.7	0.5	<0.5	0.7	0.6	1.1
Colour	TCU		5	<5	<5	<5	<5	<5	<5
Turbidity	NTU		0.5	6.4	3.7	2.5	53.6	3.5	10.2
Calcium	mg/L		0.05	73.3	83.2	81.5	88.3	82.5	78.3
Magnesium	mg/L		0.05	22.6	23.1	23.0	25.1	26.2	22.8
Sodium	mg/L		0.05	2.65	5.15	9.66	4.72	3.91	7.26
Potassium	mg/L		0.05	1.03	0.89	0.91	1.34	0.98	0.99
Aluminum	mg/L		0.004	0.006	0.009	0.006	0.011	<0.004	<0.004
Antimony	mg/L		0.003	<0.003	<0.003	<0.003	<0.003	<0.003	<0.003
Arsenic	mg/L		0.003	<0.003	<0.003	<0.003	<0.003	<0.003	<0.003

Certified By:

Results relate only to the items tested and to all the items tested

TOWN OF CALEDON
PLANNING
RECEIVED
Jul 12, 2021

AGAT Laboratories

5835 COOPERS AVENUE
MISSISSAUGA, ONTARIO
CANADA L4Z 1Y2
TEL (905)712-5100
FAX (905)712-5122
http://www.agatlabs.com

Certificate of Analysis

AGAT WORK ORDER: 16T101841

PROJECT: 300033273

CLIENT NAME: R.J. BURNSIDE & ASSOCIATES LTD

ATTENTION TO: Dwight Smikle

SAMPLING SITE:

SAMPLED BY:

Water Quality Assessment - Groundwater Samples

DATE RECEIVED: 2016-06-06

DATE REPORTED: 2016-06-08

		SAMPLE DESCRIPTION:		TW2	TW6	TW5	TW8	TW9	TW11
		SAMPLE TYPE:		Water	Water	Water	Water	Water	Water
		DATE SAMPLED:		6/2/2016	6/2/2016	6/2/2016	6/2/2016	6/2/2016	6/2/2016
Parameter	Unit	G / S	RDL	7607710	7607713	7607719	7607726	7607733	7607739
Barium	mg/L		0.002	0.063	0.101	0.112	0.087	0.069	0.056
Beryllium	mg/L		0.001	<0.001	<0.001	<0.001	<0.001	<0.001	<0.001
Boron	mg/L		0.010	0.012	0.012	0.011	0.025	0.013	0.010
Cadmium	mg/L		0.001	<0.001	<0.001	<0.001	<0.001	<0.001	<0.001
Chromium	mg/L		0.003	<0.003	<0.003	<0.003	<0.003	<0.003	<0.003
Cobalt	mg/L		0.001	<0.001	<0.001	<0.001	<0.001	<0.001	<0.001
Copper	mg/L		0.003	<0.003	<0.003	<0.003	<0.003	<0.003	<0.003
Iron	mg/L		0.010	<0.010	<0.010	<0.010	<0.010	<0.010	<0.010
Lead	mg/L		0.002	<0.002	<0.002	<0.002	<0.002	<0.002	<0.002
Manganese	mg/L		0.002	0.004	<0.002	<0.002	0.005	<0.002	<0.002
Mercury	mg/L		0.0001	<0.0001	<0.0001	<0.0001	<0.0001	<0.0001	<0.0001
Molybdenum	mg/L		0.002	<0.002	<0.002	<0.002	<0.002	<0.002	<0.002
Nickel	mg/L		0.003	<0.003	<0.003	<0.003	<0.003	<0.003	<0.003
Selenium	mg/L		0.004	<0.004	<0.004	<0.004	<0.004	<0.004	<0.004
Silver	mg/L		0.002	<0.002	<0.002	<0.002	<0.002	<0.002	<0.002
Strontium	mg/L		0.005	0.122	0.132	0.153	1.42	0.296	0.123
Thallium	mg/L		0.006	<0.006	<0.006	<0.006	<0.006	<0.006	<0.006
Tin	mg/L		0.002	<0.002	<0.002	<0.002	<0.002	<0.002	<0.002
Titanium	mg/L		0.002	<0.002	<0.002	<0.002	<0.002	<0.002	<0.002
Tungsten	mg/L		0.010	<0.010	<0.010	<0.010	<0.010	<0.010	<0.010
Uranium	mg/L		0.002	<0.002	<0.002	<0.002	<0.002	<0.002	<0.002
Vanadium	mg/L		0.002	<0.002	<0.002	<0.002	<0.002	<0.002	<0.002
Zinc	mg/L		0.005	0.010	0.035	0.026	0.023	0.031	0.024
Zirconium	mg/L		0.004	<0.004	<0.004	<0.004	<0.004	<0.004	<0.004
% Difference/ Ion Balance	%		NA	2.23	1.11	1.02	1.52	1.52	1.67

Comments: RDL - Reported Detection Limit; G / S - Guideline / Standard

7607710-7607739 Samples required dilution prior to analysis for Anions due to the presence of non-target Ions; the RDLs were adjusted to reflect the dilution.

Certified By:

Results relate only to the items tested and to all the items tested

TOWN OF CALEDON
PLANNING
RECEIVED
Jul 12, 2021

AGAT Laboratories

5835 COOPERS AVENUE
MISSISSAUGA, ONTARIO
CANADA L4Z 1Y2
TEL (905)712-5100
FAX (905)712-5122
http://www.agatlabs.com

Quality Assurance

CLIENT NAME: R.J. BURNSIDE & ASSOCIATES LTD

AGAT WORK ORDER: 16T101841

PROJECT: 300033273

ATTENTION TO: Dwight Smikle

SAMPLING SITE:

SAMPLED BY:

Water Analysis

RPT Date:			DUPLICATE			Method Blank	REFERENCE MATERIAL			METHOD BLANK SPIKE			MATRIX SPIKE		
PARAMETER	Batch	Sample Id	Dup #1	Dup #2	RPD		Measured Value	Acceptable Limits		Recovery	Acceptable Limits		Recovery	Acceptable Limits	
								Lower	Upper		Lower	Upper		Lower	Upper
Water Quality Assessment - Groundwater Samples															
Electrical Conductivity	7607726	7607726	627	630	0.5%	< 2	100%	80%	120%	NA			NA		
pH	7607726	7607726	8.17	8.11	0.7%	NA	100%	90%	110%	NA			NA		
Total Dissolved Solids	7606122		858	906	5.4%	< 20	114%	80%	120%	NA			NA		
Alkalinity (as CaCO3)	7607726	7607726	251	262	4.3%	< 5	102%	80%	120%	NA			NA		
Bicarbonate (as CaCO3)	7607726	7607726	251	262	4.3%	< 5	NA			NA			NA		
Carbonate (as CaCO3)	7607726	7607726	< 5	<5	NA	< 5	NA			NA			NA		
Hydroxide (as CaCO3)	7607726	7607726	< 5	<5	NA	< 5	NA			NA			NA		
Fluoride	7607427		<0.10	<0.10	NA	< 0.05	98%	90%	110%	97%	90%	110%	94%	80%	120%
Chloride	7607427		122	117	4.2%	< 0.10	91%	90%	110%	108%	90%	110%	NA	80%	120%
Nitrate as N	7607427		0.73	0.73	0.0%	< 0.05	92%	90%	110%	90%	90%	110%	95%	80%	120%
Nitrite as N	7607427		<0.10	<0.10	NA	< 0.05	NA	90%	110%	96%	90%	110%	85%	80%	120%
Bromide	7607427		<0.10	<0.10	NA	< 0.05	104%	90%	110%	104%	90%	110%	102%	80%	120%
Sulphate	7607427		28.2	28.2	0.0%	< 0.10	105%	90%	110%	100%	90%	110%	101%	80%	120%
Ortho Phosphate as P	7607427		<0.20	<0.20	NA	< 0.10	107%	90%	110%	106%	90%	110%	116%	80%	120%
Ammonia as N	7605143		<0.02	<0.02	NA	< 0.02	90%	90%	110%	97%	90%	110%	95%	80%	120%
Total Phosphorus	7602935		0.44	0.43	2.3%	< 0.05	101%	80%	120%	95%	90%	110%	101%	70%	130%
Total Organic Carbon	7603116		2.7	2.6	3.8%	< 0.5	98%	90%	110%	92%	90%	110%	97%	80%	120%
Colour	7595900		60	63	4.9%	< 5	101%	90%	110%	NA			NA		
Turbidity	7606359		<0.5	<0.5	NA	< 0.5	103%	90%	110%	NA			NA		
Calcium	7607710	7607710	73.3	74.7	1.9%	< 0.05	102%	90%	110%	101%	90%	110%	97%	70%	130%
Magnesium	7607710	7607710	22.6	23.0	1.8%	< 0.05	99%	90%	110%	97%	90%	110%	98%	70%	130%
Sodium	7607710	7607710	2.65	2.63	0.8%	< 0.05	96%	90%	110%	97%	90%	110%	94%	70%	130%
Potassium	7607710	7607710	1.03	1.02	1.0%	< 0.05	93%	90%	110%	94%	90%	110%	92%	70%	130%
Aluminum	7607710	7607710	0.006	0.009	NA	< 0.004	104%	90%	110%	98%	90%	110%	105%	70%	130%
Antimony	7607710	7607710	< 0.003	<0.003	NA	< 0.003	99%	90%	110%	93%	90%	110%	102%	70%	130%
Arsenic	7607710	7607710	< 0.003	<0.003	NA	< 0.003	104%	90%	110%	99%	90%	110%	107%	70%	130%
Barium	7607710	7607710	0.063	0.062	1.6%	< 0.002	103%	90%	110%	99%	90%	110%	105%	70%	130%
Beryllium	7607710	7607710	< 0.001	<0.001	NA	< 0.001	106%	90%	110%	100%	90%	110%	111%	70%	130%
Boron	7607710	7607710	0.012	0.011	NA	< 0.010	110%	90%	110%	103%	90%	110%	110%	70%	130%
Cadmium	7607710	7607710	< 0.001	<0.001	NA	< 0.001	100%	90%	110%	99%	90%	110%	118%	70%	130%
Chromium	7607710	7607710	< 0.003	<0.003	NA	< 0.003	104%	90%	110%	98%	90%	110%	105%	70%	130%
Cobalt	7607710	7607710	< 0.001	<0.001	NA	< 0.001	103%	90%	110%	99%	90%	110%	106%	70%	130%
Copper	7607710	7607710	< 0.003	<0.003	NA	< 0.003	104%	90%	110%	99%	90%	110%	105%	70%	130%
Iron	7607710	7607710	< 0.010	<0.010	NA	< 0.010	104%	90%	110%	91%	90%	110%	94%	70%	130%
Lead	7607710	7607710	< 0.002	<0.002	NA	< 0.002	99%	90%	110%	94%	90%	110%	98%	70%	130%
Manganese	7607710	7607710	0.004	0.004	NA	< 0.002	104%	90%	110%	99%	90%	110%	108%	70%	130%
Mercury	7607710	7607710	<0.0001	<0.0001	NA	< 0.0001	104%	90%	110%	98%	90%	110%	101%	80%	120%
Molybdenum	7607710	7607710	< 0.002	<0.002	NA	< 0.002	101%	90%	110%	94%	90%	110%	105%	70%	130%
Nickel	7607710	7607710	< 0.003	<0.003	NA	< 0.003	106%	90%	110%	101%	90%	110%	107%	70%	130%

AGAT Laboratories is accredited to ISO/IEC 17025 by the Canadian Association for Laboratory Accreditation Inc. (CALA) and/or Standards Council of Canada (SCC) for specific tests listed on the scope of accreditation. AGAT Laboratories (Mississauga) is also accredited by the Canadian Association for Laboratory Accreditation Inc. (CALA) for specific drinking water tests. Accreditations are location and parameter specific. A complete listing of parameters for each location is available from www.cala.ca and/or www.scc.ca. The tests in this report may not necessarily be included in the scope of accreditation.

Results relate only to the items tested and to all the items tested

TOWN OF CALEDON
PLANNING
RECEIVED
Jul 12, 2021

AGAT Laboratories
5835 COOPERS AVENUE
MISSISSAUGA, ONTARIO
CANADA L4Z 1Y2
TEL (905)712-5100
FAX (905)712-5122
http://www.agatlabs.com

Quality Assurance

CLIENT NAME: R.J. BURNSIDE & ASSOCIATES LTD
AGAT WORK ORDER: 16T101841
PROJECT: 300033273
ATTENTION TO: Dwight Smikle
SAMPLING SITE:
SAMPLED BY:

Water Analysis (Continued)

RPT Date:			DUPLICATE				REFERENCE MATERIAL			METHOD BLANK SPIKE			MATRIX SPIKE		
PARAMETER	Batch	Sample Id	Dup #1	Dup #2	RPD	Method Blank	Measured Value	Acceptable Limits		Recovery	Acceptable Limits		Recovery	Acceptable Limits	
								Lower	Upper		Lower	Upper		Lower	Upper
Selenium	7607710	7607710	< 0.004	<0.004	NA	< 0.004	102%	90%	110%	97%	90%	110%	110%	70%	130%
Silver	7607710	7607710	< 0.002	<0.002	NA	< 0.002	104%	90%	110%	109%	90%	110%	120%	70%	130%
Strontium	7607710	7607710	0.122	0.121	0.8%	< 0.005	105%	90%	110%	97%	90%	110%	106%	70%	130%
Thallium	7607710	7607710	< 0.006	<0.006	NA	< 0.006	106%	90%	110%	106%	90%	110%	109%	70%	130%
Tin	7607710	7607710	< 0.002	<0.002	NA	< 0.002	101%	90%	110%	97%	90%	110%	105%	70%	130%
Titanium	7607710	7607710	< 0.002	<0.002	NA	< 0.002	106%	90%	110%	95%	90%	110%	102%	70%	130%
Tungsten	7607710	7607710	< 0.010	<0.010	NA	< 0.010	106%	90%	110%	100%	90%	110%	100%	70%	130%
Uranium	7607710	7607710	< 0.002	<0.002	NA	< 0.002	106%	90%	110%	92%	90%	110%	98%	70%	130%
Vanadium	7607710	7607710	< 0.002	<0.002	NA	< 0.002	100%	90%	110%	95%	90%	110%	101%	70%	130%
Zinc	7607710	7607710	0.010	0.010	NA	< 0.005	101%	90%	110%	96%	90%	110%	102%	70%	130%
Zirconium	7607710	7607710	< 0.004	<0.004	NA	< 0.004	102%	90%	110%	95%	90%	110%	94%	70%	130%

Comments: NA signifies Not Applicable.
Duplicate Qualifier: As the measured result approaches the RL, the uncertainty associated with the value increases dramatically, thus duplicate acceptance limits apply only where the average of the two duplicates is greater than five times the RL.

Certified By:

AGAT Laboratories is accredited to ISO/IEC 17025 by the Canadian Association for Laboratory Accreditation Inc. (CALA) and/or Standards Council of Canada (SCC) for specific tests listed on the scope of accreditation. AGAT Laboratories (Mississauga) is also accredited by the Canadian Association for Laboratory Accreditation Inc. (CALA) for specific drinking water tests. Accreditations are location and parameter specific. A complete listing of parameters for each location is available from www.cala.ca and/or www.scc.ca. The tests in this report may not necessarily be included in the scope of accreditation.

Results relate only to the items tested and to all the items tested

TOWN OF CALEDON
PLANNING
RECEIVED
Jul 12, 2021

AGAT Laboratories
5835 COOPERS AVENUE
MISSISSAUGA, ONTARIO
CANADA L4Z 1Y2
TEL (905)712-5100
FAX (905)712-5122
http://www.agatlabs.com

Method Summary

CLIENT NAME: R.J. BURNSIDE & ASSOCIATES LTD

AGAT WORK ORDER: 16T101841

PROJECT: 300033273

ATTENTION TO: Dwight Smikle

SAMPLING SITE:

SAMPLED BY:

PARAMETER	AGAT S.O.P	LITERATURE REFERENCE	ANALYTICAL TECHNIQUE
Water Analysis			
Electrical Conductivity	INOR-93-6000	SM 2510 B	PC TITRATE
pH	INOR-93-6000	SM 4500-H+ B	PC TITRATE
Saturation pH		SM 2320 B	CALCULATION
Langelier Index		SM 2330B	CALCULATION
Total Hardness (as CaCO3)	MET-93-6105	EPA SW-846 6010C & 200.7	ICP/OES
Total Dissolved Solids	INOR-93-6028	SM 2540 C	BALANCE
Alkalinity (as CaCO3)	INOR-93-6000	SM 2320 B	PC TITRATE
Bicarbonate (as CaCO3)	INOR-93-6000	SM 2320 B	PC TITRATE
Carbonate (as CaCO3)	INOR-93-6000	SM 2320 B	PC TITRATE
Hydroxide (as CaCO3)	INOR-93-6000	SM 2320 B	PC TITRATE
Fluoride	INOR-93-6004	SM 4110 B	ION CHROMATOGRAPH
Chloride	INOR-93-6004	SM 4110 B	ION CHROMATOGRAPH
Nitrate as N	INOR-93-6004	SM 4110 B	ION CHROMATOGRAPH
Nitrite as N	INOR-93-6004	SM 4110 B	ION CHROMATOGRAPH
Bromide	INOR-93-6004	SM 4110 B	ION CHROMATOGRAPH
Sulphate	INOR-93-6004	SM 4110 B	ION CHROMATOGRAPH
Ortho Phosphate as P	INOR-93-6004	SM 4110 B	ION CHROMATOGRAPH
Reactive Silica	INOR-93-6047	AQ2 EPA-122A & SM 4500 SiO2 D	AQ2 DISCRETE ANALYSER
Ammonia as N	INOR-93-6059	QuikChem 10-107-06-1-J & SM 4500 NH3-F	LACHAT FIA
Total Phosphorus	INOR-93-6057	QuikChem 10-115-01-3-A & SM 4500-P I	LACHAT FIA
Total Organic Carbon	INOR-93-6049	EPA 415.1 & SM 5310	SHIMADZU CARBON ANALYZER
Colour	INOR-93-6046	SM 2120 B	SPECTROPHOTOMETER
Turbidity	INOR-93-6044	SM 2130 B	NEPHELOMETER
Calcium	MET-93-6105	EPA SW-846 6010C & 200.7	ICP/OES
Magnesium	MET-93-6105	EPA SW-846 6010C & 200.7	ICP/OES
Sodium	MET-93-6105	EPA SW-846 6010C & 200.7	ICP/OES
Potassium	MET-93-6105	EPA SW-846 6010C & 200.7	ICP/OES
Aluminum	MET-93-6103	EPA SW-846 6020A & 200.8	ICP-MS
Antimony	MET-93-6103	EPA SW-846 6020A & 200.8	ICP-MS
Arsenic	MET-93-6103	EPA SW-846 6020A & 200.8	ICP-MS
Barium	MET-93-6103	EPA SW-846 6020A & 200.8	ICP-MS
Beryllium	MET-93-6103	EPA SW-846 6020A & 200.8	ICP-MS
Boron	MET-93-6103	EPA SW-846 6020A & 200.8	ICP-MS
Cadmium	MET-93-6103	EPA SW-846 6020A & 200.8	ICP-MS
Chromium	MET-93-6103	EPA SW-846 6020A & 200.8	ICP-MS
Cobalt	MET-93-6103	EPA SW-846 6020A & 200.8	ICP-MS
Copper	MET-93-6103	EPA SW-846 6020A & 200.8	ICP-MS
Iron	MET-93-6103	EPA SW-846 6020A & 200.8	ICP-MS
Lead	MET-93-6103	EPA SW-846 6020A & 200.8	ICP-MS
Manganese	MET-93-6103	EPA SW-846 6020A & 200.8	ICP-MS
Mercury	MET-93-6100	EPA SW 846 7470 & 245.1	CVAAS
Molybdenum	MET-93-6103	EPA SW-846 6020A & 200.8	ICP-MS
Nickel	MET-93-6103	EPA SW-846 6020A & 200.8	ICP-MS
Selenium	MET-93-6103	EPA SW-846 6020A & 200.8	ICP-MS
Silver	MET-93-6103	EPA SW-846 6020A & 200.8	ICP-MS
Strontium	MET-93-6103	EPA SW-846 6020A & 200.8	ICP-MS
Thallium	MET-93-6103	EPA SW-846 6020A & 200.8	ICP-MS

Results relate only to the items tested and to all the items tested

TOWN OF CALEDON
PLANNING
RECEIVED
Jul 12, 2021

AGAT Laboratories

5835 COOPERS AVENUE
MISSISSAUGA, ONTARIO
CANADA L4Z 1Y2
TEL (905)712-5100
FAX (905)712-5122
http://www.agatlabs.com

Method Summary

CLIENT NAME: R.J. BURNSIDE & ASSOCIATES LTD

AGAT WORK ORDER: 16T101841

PROJECT: 300033273

ATTENTION TO: Dwight Smikle

SAMPLING SITE:

SAMPLED BY:

PARAMETER	AGAT S.O.P	LITERATURE REFERENCE	ANALYTICAL TECHNIQUE
Tin	MET-93-6103	EPA SW-846 6020A & 200.8	ICP-MS
Titanium	MET-93-6103	EPA SW-846 6020A & 200.8	ICP-MS
Tungsten	MET-93-6103	EPA SW-846 6020A & 200.8	ICP-MS
Uranium	MET-93-6103	EPA SW-846 6020A & 200.8	ICP-MS
Vanadium	MET-93-6103	EPA SW-846 6020A & 200.8	ICP-MS
Zinc	MET-93-6103	EPA SW-846 6020A & 200.8	ICP-MS
Zirconium	MET-93-6103	EPA SW-846 6020A & 200.8	ICP-MS
% Difference/ Ion Balance		SM 1030 E	CALCULATION

Results relate only to the items tested and to all the items tested

AGAT Laboratories

TURBIDITY 1 Lg

5835 Coopers Avenue
Mississauga, Ontario L4Z 1Y2
Ph: 905.712.5100 Fax: 905.712.5122
webearth.agatlabs.com

Chain of Custody Record

If this is a Drinking Water sample, please use Drinking Water Chain of Custody Form (potable water intended for human consumption)

Laboratory Use Only

Work Order #: 16T101841

Cooler Quantity:

Arrival Temperatures: 8.0 | 7.6 | 7.8 | 7.2 | 7.4 | 7.3

Custody Seal Intact: ☐Yes ☐No ☐N/A

Notes:

Report Information:

Company: RJ Burnside & Associates Ltd.
Contact: Dwight Smickle
Address: 292 Speedvale Ave. West Unit #20, Guelph ONT, N1H 1C4
Phone: Fax:
Reports to be sent to:
1. Email: dwight.smickle@rjburnside.com
2. Email:

Regulatory Requirements:

☐ No Regulatory Requirement

(Please check all applicable boxes)

☐ Regulation 153/04
Table ____ (Indicate One)
☐ Ind/Com
☐ Res/Park
☐ Agriculture
Soil Texture (Check One)
☐ Coarse
☐ Fine

☐ Sewer Use
☐ Sanitary
☐ Storm
Region ____ (Indicate One)

☐ Regulation 558
☐ CCME
☐ Prov. Water Quality Objectives (PWQO)
☐ Other
____ (Indicate One)

Turnaround Time (TAT) Required:

Regular TAT ☒ 5 to 7 Business Days

Rush TAT (Rush Surcharges Apply)

☐ 3 Business Days ☐ 2 Business Days ☐ 1 Business Day

OR Date Required (Rush Surcharges May Apply):

Please provide prior notification for rush TAT
**TAT is exclusive of weekends and statutory holidays*

Project Information:

Project: 3000033273
Site Location: Belfountain
Sampled By: Matt Valeriote
AGAT Quote #: PO:
Please note: If quotation number is not provided, client will be billed full price for analysis.

Is this submission for a **Record of Site Condition?** ☐ Yes ☒ No

Report Guideline on *Certificate of Analysis* ☒ Yes ☐ No

Invoice Information:

Bill To Same: Yes ☒ No ☐

Company:
Contact:
Address:
Email:

Sample Matrix Legend

B	Biota
GW	Ground Water
O	Oil
P	Paint
S	Soil
SD	Sediment
SW	Surface Water

Sample Identification	Date Sampled	Time Sampled	# of Containers	Sample Matrix	Comments/ Special Instructions	Metals and Inorganics	Metal Scan	Hydride Forming Metals	Client Custom Metals	(Check Applicable) ORPs: ☐B-HWS ☐Cl⁻ ☐CN⁻ ☐Cr⁶⁺ ☐EC ☐FOC ☐NO_3/NO_2 ☐Total N ☐Hg ☐pH ☐SAR	Nutrients: ☐TP ☐NH_3 ☐TKN ☐NO_3 ☐NO_2 ☐NO_3/NO_2	Volatiles: ☐VOC ☐BTEX ☐THM	CCME Fractions 1 to 4	ABNs	PAHs	Chlorophenols	PCBs	Organochlorine Pesticides	TCLP Metals/Inorganics	Sewer Use	W&A
TW2	June 2 2016		6	GW	Filtered Metals + Mercury For All Samples															X
TW7			6	GW																X
TW5			6	GW																X
TW8			6	GW																X
TW9			6	GW																X
TW11			6	GW																X

Samples Relinquished By (Print Name and Sign):	Date	Time	Samples Received By (Print Name and Sign):	Date	Time
Matt Valeriote	June 2, 16		Ranji Singh	2016-June-2	5:00pm
Samples Relinquished By (Print Name and Sign):	Date	Time	Samples Received By (Print Name and Sign):	Date	Time
				16/6/4	11:06

Page 1 of 1

Nº: T022151

Pink Copy - Client | Yellow Copy - AGAT | White Copy - AGAT

Document ID: DW-TS-1511-010

Date Issued: November 2, 2015

TOWN OF CALEDON
PLANNING
RECEIVED
Jul 12 2021

TOWN OF CALEDON
PLANNING
RECEIVED
Jul 12, 2021

AGAT Laboratories

5835 COOPERS AVENUE
MISSISSAUGA, ONTARIO
CANADA L4Z 1Y2
TEL (905)712-5100
FAX (905)712-5122
http://www.agatlabs.com

CLIENT NAME: R.J. BURNSIDE & ASSOCIATES LTD
292 Speedvale Avenue West, Unit 7
Guelph, ON N1H1C4
(519) 823-4995

ATTENTION TO: Jim Baxter

PROJECT: 300033273

AGAT WORK ORDER: 16W073428

WATER ANALYSIS REVIEWED BY: Mike Muneswar, BSc (Chem), Senior Inorganic Analyst

DATE REPORTED: Mar 03, 2016

PAGES (INCLUDING COVER): 9

VERSION*: 1

Should you require any information regarding this analysis please contact your client services representative at (905) 712-5100

*NOTES

All samples will be disposed of within 30 days following analysis. Please contact the lab if you require additional sample storage time.

Member of: Association of Professional Engineers, Geologists and Geophysicists of Alberta (APEGGA)
Western Enviro-Agricultural Laboratory Association (WEALA)
Environmental Services Association of Alberta (ESAA)

AGAT Laboratories is accredited to ISO/IEC 17025 by the Canadian Association for Laboratory Accreditation Inc. (CALA) and/or Standards Council of Canada (SCC) for specific tests listed on the scope of accreditation. AGAT Laboratories (Mississauga) is also accredited by the Canadian Association for Laboratory Accreditation Inc. (CALA) for specific drinking water tests. Accreditations are location and parameter specific. A complete listing of parameters for each location is available from www.cala.ca and/or www.scc.ca. The tests in this report may not necessarily be included in the scope of accreditation.

Results relate only to the items tested and to all the items tested
All reportable information as specified by ISO 17025:2005 is available from AGAT Laboratories upon request

TOWN OF CALEDON
PLANNING
RECEIVED

Jul 12, 2021

AGAT Laboratories

5835 COOPERS AVENUE
MISSISSAUGA, ONTARIO
CANADA L4Z 1Y2
TEL (905)712-5100
FAX (905)712-5122
http://www.agatlabs.com

Certificate of Analysis

AGAT WORK ORDER: 16W073428

PROJECT: 300033273

CLIENT NAME: R.J. BURNSIDE & ASSOCIATES LTD

ATTENTION TO: Jim Baxter

SAMPLING SITE:

SAMPLED BY:

Nitrate (Water)

DATE RECEIVED: 2016-03-02

DATE REPORTED: 2016-03-03

			SAMPLE DESCRIPTION:	TW12N
			SAMPLE TYPE:	Water
			DATE SAMPLED:	3/1/2016
Parameter	Unit	G / S	RDL	7417866
Nitrate as N	mg/L		0.25	<0.25

Comments: RDL - Reported Detection Limit; G / S - Guideline / Standard

7417866 Sample required dilution prior to analysis for Nitrate due to the presence of non-target Anions; the RDL was adjusted accordingly.

Certified By:

Results relate only to the items tested and to all the items tested

TOWN OF CALEDON
PLANNING
RECEIVED
Jul 12, 2021

AGAT Laboratories

5835 COOPERS AVENUE
MISSISSAUGA, ONTARIO
CANADA L4Z 1Y2
TEL (905)712-5100
FAX (905)712-5122
http://www.agatlabs.com

Certificate of Analysis

AGAT WORK ORDER: 16W073428

PROJECT: 300033273

CLIENT NAME: R.J. BURNSIDE & ASSOCIATES LTD

ATTENTION TO: Jim Baxter

SAMPLING SITE:

SAMPLED BY:

Water Quality Assessment

DATE RECEIVED: 2016-03-02

DATE REPORTED: 2016-03-03

		SAMPLE DESCRIPTION:		TW12
		SAMPLE TYPE:		Water
		DATE SAMPLED:		3/1/2016
Parameter	Unit	G / S	RDL	7417874
Electrical Conductivity	uS/cm		2	1740
pH	pH Units		NA	7.92
Saturation pH				6.60
Langelier Index				1.32
Total Hardness (as CaCO3)	mg/L		0.5	1010
Total Dissolved Solids	mg/L		20	1480
Alkalinity (as CaCO3)	mg/L		5	195
Bicarbonate (as CaCO3)	mg/L		5	195
Carbonate (as CaCO3)	mg/L		5	<5
Hydroxide (as CaCO3)	mg/L		5	<5
Fluoride	mg/L		0.25	<0.25
Chloride	mg/L		0.50	2.30
Nitrate as N	mg/L		0.25	<0.25
Nitrite as N	mg/L		0.25	<0.25
Bromide	mg/L		0.25	<0.25
Sulphate	mg/L		2.0	875
Ortho Phosphate as P	mg/L		0.50	<0.50
Reactive Silica	mg/L		0.05	14.2
Ammonia as N	mg/L		0.02	0.08
Total Phosphorus	mg/L		0.05	<0.05
Total Organic Carbon	mg/L		0.5	<0.5
Colour	TCU		5	<5
Turbidity	NTU		0.5	5.0
Calcium	mg/L		0.10	320
Magnesium	mg/L		0.10	51.6
Sodium	mg/L		0.10	7.51
Potassium	mg/L		0.10	1.91
Aluminum	mg/L		0.004	<0.004
Antimony	mg/L		0.003	<0.003
Arsenic	mg/L		0.003	0.013

Certified By:

Results relate only to the items tested and to all the items tested

TOWN OF CALEDON
PLANNING
RECEIVED

Jul 12, 2021

AGAT Laboratories

5835 COOPERS AVENUE
MISSISSAUGA, ONTARIO
CANADA L4Z 1Y2
TEL (905)712-5100
FAX (905)712-5122
http://www.agatlabs.com

Certificate of Analysis

AGAT WORK ORDER: 16W073428

PROJECT: 300033273

CLIENT NAME: R.J. BURNSIDE & ASSOCIATES LTD

ATTENTION TO: Jim Baxter

SAMPLING SITE:

SAMPLED BY:

Water Quality Assessment

DATE RECEIVED: 2016-03-02

DATE REPORTED: 2016-03-03

		SAMPLE DESCRIPTION:		TW12
		SAMPLE TYPE:		Water
		DATE SAMPLED:		3/1/2016
Parameter	Unit	G / S	RDL	7417874
Barium	mg/L		0.002	0.005
Beryllium	mg/L		0.001	<0.001
Boron	mg/L		0.010	0.055
Cadmium	mg/L		0.001	<0.001
Chromium	mg/L		0.003	<0.003
Cobalt	mg/L		0.001	<0.001
Copper	mg/L		0.003	<0.003
Iron	mg/L		0.010	0.401
Lead	mg/L		0.002	<0.002
Manganese	mg/L		0.002	0.026
Mercury	mg/L		0.0001	<0.0001
Molybdenum	mg/L		0.002	0.004
Nickel	mg/L		0.003	<0.003
Selenium	mg/L		0.004	<0.004
Silver	mg/L		0.002	<0.002
Strontium	mg/L		0.005	3.52
Thallium	mg/L		0.006	<0.006
Tin	mg/L		0.002	<0.002
Titanium	mg/L		0.002	0.012
Tungsten	mg/L		0.010	<0.010
Uranium	mg/L		0.002	<0.002
Vanadium	mg/L		0.002	<0.002
Zinc	mg/L		0.005	0.036
Zirconium	mg/L		0.004	<0.004
% Difference/ Ion Balance	%		NA	3.66

Comments: RDL - Reported Detection Limit; G / S - Guideline / Standard

7417874 Sample required dilution prior to analysis for Anions & Cations in order to keep the analytes within the calibration range of the instruments and/or to minimize any matrix interferences; the RDLs were adjusted accordingly.

Certified By:

Results relate only to the items tested and to all the items tested

TOWN OF CALEDON
PLANNING
RECEIVED
Jul 12, 2021

AGAT Laboratories

5835 COOPERS AVENUE
MISSISSAUGA, ONTARIO
CANADA L4Z 1Y2
TEL (905)712-5100
FAX (905)712-5122
http://www.agatlabs.com

Quality Assurance

CLIENT NAME: R.J. BURNSIDE & ASSOCIATES LTD

AGAT WORK ORDER: 16W073428

PROJECT: 300033273

ATTENTION TO: Jim Baxter

SAMPLING SITE:

SAMPLED BY:

Water Analysis

RPT Date: Mar 03, 2016			DUPLICATE				REFERENCE MATERIAL			METHOD BLANK SPIKE			MATRIX SPIKE		
PARAMETER	Batch	Sample Id	Dup #1	Dup #2	RPD	Method Blank	Measured Value	Acceptable Limits		Recovery	Acceptable Limits		Recovery	Acceptable Limits	
								Lower	Upper		Lower	Upper		Lower	Upper
Water Quality Assessment															
Electrical Conductivity	7415208		751	751	0.0%	< 2	102%	80%	120%	NA			NA		
pH	7415208		7.85	7.87	0.3%	NA	100%	90%	110%	NA			NA		
Total Dissolved Solids	7417874	7417874	1480	1270	15.3%	< 20	98%	80%	120%	NA			NA		
Alkalinity (as CaCO3)	7415208		102	104	1.9%	< 5	101%	80%	120%	NA			NA		
Bicarbonate (as CaCO3)	7415208		102	104	1.9%	< 5	NA			NA			NA		
Carbonate (as CaCO3)	7415208		<5	<5	NA	< 5	NA			NA			NA		
Hydroxide (as CaCO3)	7415208		<5	<5	NA	< 5	NA			NA			NA		
Fluoride	7411105		<0.5	<0.5	NA	< 0.05	107%	90%	110%	109%	90%	110%	99%	80%	120%
Chloride	7411105		171	172	0.6%	< 0.10	102%	90%	110%	107%	90%	110%	95%	80%	120%
Nitrate as N	7411105		<0.5	<0.5	NA	< 0.05	93%	90%	110%	102%	90%	110%	105%	80%	120%
Nitrite as N	7411105		<0.5	<0.5	NA	< 0.05	NA	90%	110%	94%	90%	110%	90%	80%	120%
Bromide	7411105		<0.5	<0.5	NA	< 0.05	109%	90%	110%	104%	90%	110%	89%	80%	120%
Sulphate	7411105		<1.0	<1.0	NA	< 0.10	96%	90%	110%	100%	90%	110%	95%	80%	120%
Ortho Phosphate as P	7411105		<1.0	<1.0	NA	< 0.10	93%	90%	110%	101%	90%	110%	94%	80%	120%
Reactive Silica	7402270		1.97	2.00	1.5%	< 0.05	98%	90%	110%	101%	90%	110%	93%	80%	120%
Ammonia as N	7417865		0.06	0.06	NA	< 0.02	103%	90%	110%	102%	90%	110%	94%	80%	120%
Total Phosphorus	7417874	7417874	< 0.05	<0.05	NA	< 0.05	103%	80%	120%	98%	90%	110%	101%	70%	130%
Total Organic Carbon	7417874	7417874	< 0.5	<0.5	NA	< 0.5	96%	90%	110%	92%	90%	110%	99%	80%	120%
Colour	7417874	7417874	< 5	<5	NA	< 5	100%	90%	110%	NA			NA		
Turbidity	7417874	7417874	5.0	4.8	4.1%	< 0.5	104%	90%	110%	NA			NA		
Calcium	7413138		17.0	16.7	1.8%	< 0.05	103%	90%	110%	105%	90%	110%	100%	70%	130%
Magnesium	7413138		3.77	3.75	0.5%	< 0.05	97%	90%	110%	99%	90%	110%	100%	70%	130%
Sodium	7413138		80.8	81.6	1.0%	< 0.05	101%	90%	110%	98%	90%	110%	97%	70%	130%
Potassium	7413138		0.79	0.79	0.0%	< 0.05	99%	90%	110%	98%	90%	110%	97%	70%	130%
Aluminum	7417874	7417874	< 0.004	<0.004	NA	< 0.004	102%	90%	110%	110%	90%	110%	101%	70%	130%
Antimony	7417874	7417874	< 0.003	<0.003	NA	< 0.003	102%	90%	110%	98%	90%	110%	96%	70%	130%
Arsenic	7417874	7417874	0.013	0.013	NA	< 0.003	106%	90%	110%	103%	90%	110%	107%	70%	130%
Barium	7417874	7417874	0.005	0.005	NA	< 0.002	99%	90%	110%	99%	90%	110%	94%	70%	130%
Beryllium	7417874	7417874	< 0.001	<0.001	NA	< 0.001	103%	90%	110%	106%	90%	110%	106%	70%	130%
Boron	7417874	7417874	0.055	0.058	5.3%	< 0.010	108%	90%	110%	104%	90%	110%	101%	70%	130%
Cadmium	7417874	7417874	< 0.001	<0.001	NA	< 0.001	102%	90%	110%	100%	90%	110%	103%	70%	130%
Chromium	7417874	7417874	< 0.003	<0.003	NA	< 0.003	100%	90%	110%	102%	90%	110%	97%	70%	130%
Cobalt	7417874	7417874	< 0.001	<0.001	NA	< 0.001	107%	90%	110%	102%	90%	110%	98%	70%	130%
Copper	7417874	7417874	< 0.003	<0.003	NA	< 0.003	102%	90%	110%	102%	90%	110%	96%	70%	130%
Iron	7417874	7417874	0.401	0.400	0.2%	< 0.010	107%	90%	110%	102%	90%	110%	87%	70%	130%
Lead	7417874	7417874	< 0.002	<0.002	NA	< 0.002	100%	90%	110%	97%	90%	110%	90%	70%	130%
Manganese	7417874	7417874	0.026	0.025	3.9%	< 0.002	110%	90%	110%	103%	90%	110%	101%	70%	130%
Mercury	7417874	7417874	<0.0001	<0.0001	NA	< 0.0001	99%	90%	110%	101%	90%	110%	93%	80%	120%
Molybdenum	7417874	7417874	0.004	0.004	NA	< 0.002	100%	90%	110%	93%	90%	110%	91%	70%	130%

AGAT Laboratories is accredited to ISO/IEC 17025 by the Canadian Association for Laboratory Accreditation Inc. (CALA) and/or Standards Council of Canada (SCC) for specific tests listed on the scope of accreditation. AGAT Laboratories (Mississauga) is also accredited by the Canadian Association for Laboratory Accreditation Inc. (CALA) for specific drinking water tests. Accreditations are location and parameter specific. A complete listing of parameters for each location is available from www.cala.ca and/or www.scc.ca. The tests in this report may not necessarily be included in the scope of accreditation.

Results relate only to the items tested and to all the items tested

TOWN OF CALEDON
PLANNING
RECEIVED
Jul 12, 2021

AGAT Laboratories
5835 COOPERS AVENUE
MISSISSAUGA, ONTARIO
CANADA L4Z 1Y2
TEL (905)712-5100
FAX (905)712-5122
http://www.agatlabs.com

Quality Assurance

CLIENT NAME: R.J. BURNSIDE & ASSOCIATES LTD
AGAT WORK ORDER: 16W073428
PROJECT: 300033273
ATTENTION TO: Jim Baxter
SAMPLING SITE:
SAMPLED BY:

Water Analysis (Continued)

RPT Date: Mar 03, 2016

PARAMETER	Batch	Sample Id	DUPLICATE			Method Blank	REFERENCE MATERIAL			METHOD BLANK SPIKE			MATRIX SPIKE		
			Dup #1	Dup #2	RPD		Measured Value	Acceptable Limits		Recovery	Acceptable Limits		Recovery	Acceptable Limits	
								Lower	Upper		Lower	Upper		Lower	Upper
Nickel	7417874	7417874	< 0.003	<0.003	NA	< 0.003	105%	90%	110%	100%	90%	110%	95%	70%	130%
Selenium	7417874	7417874	< 0.004	<0.004	NA	< 0.004	104%	90%	110%	102%	90%	110%	112%	70%	130%
Silver	7417874	7417874	< 0.002	<0.002	NA	< 0.002	104%	90%	110%	108%	90%	110%	110%	70%	130%
Strontium	7417874	7417874	3.52	3.55	0.8%	< 0.005	99%	90%	110%	97%	90%	110%	85%	70%	130%
Thallium	7417874	7417874	< 0.006	<0.006	NA	< 0.006	107%	90%	110%	106%	90%	110%	100%	70%	130%
Tin	7417874	7417874	< 0.002	<0.002	NA	< 0.002	99%	90%	110%	99%	90%	110%	95%	70%	130%
Titanium	7417874	7417874	0.012	0.012	0.0%	< 0.002	106%	90%	110%	103%	90%	110%	96%	70%	130%
Tungsten	7417874	7417874	< 0.010	<0.010	NA	< 0.010	93%	90%	110%	91%	90%	110%	91%	70%	130%
Uranium	7417874	7417874	< 0.002	<0.002	NA	< 0.002	103%	90%	110%	97%	90%	110%	92%	70%	130%
Vanadium	7417874	7417874	< 0.002	<0.002	NA	< 0.002	107%	90%	110%	103%	90%	110%	97%	70%	130%
Zinc	7417874	7417874	0.036	0.036	0.0%	< 0.005	105%	90%	110%	104%	90%	110%	110%	70%	130%
Zirconium	7417874	7417874	< 0.004	<0.004	NA	< 0.004	98%	90%	110%	94%	90%	110%	91%	70%	130%

Comments: NA signifies Not Applicable.
Duplicate Qualifier: As the measured result approaches the RL, the uncertainty associated with the value increases dramatically, thus duplicate acceptance limits apply only where the average of the two duplicates is greater than five times the RL.

Certified By:

AGAT Laboratories is accredited to ISO/IEC 17025 by the Canadian Association for Laboratory Accreditation Inc. (CALA) and/or Standards Council of Canada (SCC) for specific tests listed on the scope of accreditation. AGAT Laboratories (Mississauga) is also accredited by the Canadian Association for Laboratory Accreditation Inc. (CALA) for specific drinking water tests. Accreditations are location and parameter specific. A complete listing of parameters for each location is available from www.cala.ca and/or www.scc.ca. The tests in this report may not necessarily be included in the scope of accreditation.

Results relate only to the items tested and to all the items tested

TOWN OF CALEDON
PLANNING
RECEIVED
Jul 12, 2021

AGAT Laboratories
5835 COOPERS AVENUE
MISSISSAUGA, ONTARIO
CANADA L4Z 1Y2
TEL (905)712-5100
FAX (905)712-5122
http://www.agatlabs.com

Method Summary

CLIENT NAME: R.J. BURNSIDE & ASSOCIATES LTD

AGAT WORK ORDER: 16W073428

PROJECT: 300033273

ATTENTION TO: Jim Baxter

SAMPLING SITE:

SAMPLED BY:

PARAMETER	AGAT S.O.P	LITERATURE REFERENCE	ANALYTICAL TECHNIQUE
Water Analysis			
Nitrate as N	INOR-93-6004	SM 4110 B	ION CHROMATOGRAPH
Electrical Conductivity	INOR-93-6000	SM 2510 B	PC TITRATE
pH	INOR-93-6000	SM 4500-H+ B	PC TITRATE
Saturation pH		SM 2320 B	CALCULATION
Langelier Index		SM 2330B	CALCULATION
Total Hardness (as CaCO3)	MET-93-6105	EPA SW-846 6010C & 200.7	ICP/OES
Total Dissolved Solids	INOR-93-6028	SM 2540 C	BALANCE
Alkalinity (as CaCO3)	INOR-93-6000	SM 2320 B	PC TITRATE
Bicarbonate (as CaCO3)	INOR-93-6000	SM 2320 B	PC TITRATE
Carbonate (as CaCO3)	INOR-93-6000	SM 2320 B	PC TITRATE
Hydroxide (as CaCO3)	INOR-93-6000	SM 2320 B	PC TITRATE
Fluoride	INOR-93-6004	SM 4110 B	ION CHROMATOGRAPH
Chloride	INOR-93-6004	SM 4110 B	ION CHROMATOGRAPH
Nitrite as N	INOR-93-6004	SM 4110 B	ION CHROMATOGRAPH
Bromide	INOR-93-6004	SM 4110 B	ION CHROMATOGRAPH
Sulphate	INOR-93-6004	SM 4110 B	ION CHROMATOGRAPH
Ortho Phosphate as P	INOR-93-6004	SM 4110 B	ION CHROMATOGRAPH
Reactive Silica	INOR-93-6047	AQ2 EPA-122A & SM 4500 SiO2 D	AQ2 DISCRETE ANALYSER
Ammonia as N	INOR-93-6059	QuikChem 10-107-06-1-J & SM 4500 NH3-F	LACHAT FIA
Total Phosphorus	INOR-93-6057	QuikChem 10-115-01-3-A & SM 4500-P I	LACHAT FIA
Total Organic Carbon	INOR-93-6049	EPA 415.1 & SM 5310	SHIMADZU CARBON ANALYZER
Colour	INOR-93-6046	SM 2120 B	SPECTROPHOTOMETER
Turbidity	INOR-93-6044	SM 2130 B	NEPHELOMETER
Calcium	MET-93-6105	EPA SW-846 6010C & 200.7	ICP/OES
Magnesium	MET-93-6105	EPA SW-846 6010C & 200.7	ICP/OES
Sodium	MET-93-6105	EPA SW-846 6010C & 200.7	ICP/OES
Potassium	MET-93-6105	EPA SW-846 6010C & 200.7	ICP/OES
Aluminum	MET-93-6103	EPA SW-846 6020A & 200.8	ICP-MS
Antimony	MET-93-6103	EPA SW-846 6020A & 200.8	ICP-MS
Arsenic	MET-93-6103	EPA SW-846 6020A & 200.8	ICP-MS
Barium	MET-93-6103	EPA SW-846 6020A & 200.8	ICP-MS
Beryllium	MET-93-6103	EPA SW-846 6020A & 200.8	ICP-MS
Boron	MET-93-6103	EPA SW-846 6020A & 200.8	ICP-MS
Cadmium	MET-93-6103	EPA SW-846 6020A & 200.8	ICP-MS
Chromium	MET-93-6103	EPA SW-846 6020A & 200.8	ICP-MS
Cobalt	MET-93-6103	EPA SW-846 6020A & 200.8	ICP-MS
Copper	MET-93-6103	EPA SW-846 6020A & 200.8	ICP-MS
Iron	MET-93-6103	EPA SW-846 6020A & 200.8	ICP-MS
Lead	MET-93-6103	EPA SW-846 6020A & 200.8	ICP-MS
Manganese	MET-93-6103	EPA SW-846 6020A & 200.8	ICP-MS
Mercury	MET-93-6100	EPA SW 846 7470 & 245.1	CVAAS
Molybdenum	MET-93-6103	EPA SW-846 6020A & 200.8	ICP-MS
Nickel	MET-93-6103	EPA SW-846 6020A & 200.8	ICP-MS
Selenium	MET-93-6103	EPA SW-846 6020A & 200.8	ICP-MS
Silver	MET-93-6103	EPA SW-846 6020A & 200.8	ICP-MS
Strontium	MET-93-6103	EPA SW-846 6020A & 200.8	ICP-MS
Thallium	MET-93-6103	EPA SW-846 6020A & 200.8	ICP-MS

Results relate only to the items tested and to all the items tested

TOWN OF CALEDON
PLANNING
RECEIVED
Jul 12, 2021

AGAT Laboratories

5835 COOPERS AVENUE
MISSISSAUGA, ONTARIO
CANADA L4Z 1Y2
TEL (905)712-5100
FAX (905)712-5122
http://www.agatlabs.com

Method Summary

CLIENT NAME: R.J. BURNSIDE & ASSOCIATES LTD

AGAT WORK ORDER: 16W073428

PROJECT: 300033273

ATTENTION TO: Jim Baxter

SAMPLING SITE:

SAMPLED BY:

PARAMETER	AGAT S.O.P	LITERATURE REFERENCE	ANALYTICAL TECHNIQUE
Tin	MET-93-6103	EPA SW-846 6020A & 200.8	ICP-MS
Titanium	MET-93-6103	EPA SW-846 6020A & 200.8	ICP-MS
Tungsten	MET-93-6103	EPA SW-846 6020A & 200.8	ICP-MS
Uranium	MET-93-6103	EPA SW-846 6020A & 200.8	ICP-MS
Vanadium	MET-93-6103	EPA SW-846 6020A & 200.8	ICP-MS
Zinc	MET-93-6103	EPA SW-846 6020A & 200.8	ICP-MS
Zirconium	MET-93-6103	EPA SW-846 6020A & 200.8	ICP-MS
% Difference/ Ion Balance		SM 1030 E	CALCULATION

Results relate only to the items tested and to all the items tested

AGAT Laboratories
5835 Coopers Avenue
Mississauga, Ontario L4Z 1Y2
Ph: 905.712.5100 Fax: 905.712.5122
webearth.agatlabs.com

Chain of Custody Record

If this is a Drinking Water sample, please use Drinking Water Chain of Custody Form (potable water intended for human consumption)

Report Information:

Company: AJ Burnside & Associates Ltd.
Contact: Jim Baxter
Address: 299 Speedvale Ave. West, Unit 2, Guelph ONT
Phone: Fax:
Reports to be sent to:
1. Email: j.m.baxter@ajburnside.com
2. Email:

Project Information:

Project: 300033273
Site Location: Belfountain
Sampled By: Matt Valeriote
AGAT Quote #: PO:
Please note: If quotation number is not provided, client will be billed full price for analysis.

Invoice Information:

Bill To Same: Yes ☒ No ☐
Company:
Contact:
Address:
Email:

Regulatory Requirements:

☐ No Regulatory Requirement
(Please check all applicable boxes)

☐ Regulation 153/04
Table _____ *Indicate One*
☐ Ind/Com
☐ Res/Park
☐ Agriculture
Soil Texture *(Check One)*
☐ Coarse
☐ Fine

☐ Sewer Use
☐ Sanitary
☐ Storm
Region _____ *Indicate One*

☐ Regulation 558
☐ CCME
☐ Prov. Water Quality Objectives (PWQO)
☐ Other
_____ *Indicate One*

Is this submission for a **Record of Site Condition?** ☐ Yes ☒ No

Report Guideline on *Certificate of Analysis* ☐ Yes ☒ No

Sample Matrix Legend

B	Biota
GW	Ground Water
O	Oil
P	Paint
S	Soil
SD	Sediment
SW	Surface Water

Laboratory Use Only

Work Order #: 16W0734728
Cooler Quantity:
Arrival Temperatures: 16 | 7.2 | 7.8
69 | 71 | 17
Custody Seal Intact: ☐ Yes ☐ No ☐ N/A
Notes: on ice

Turnaround Time (TAT) Required:

Regular TAT ☐ 5 to 7 Business Days
Rush TAT (Rush Surcharges Apply)
☐ 3 Business Days ☐ 2 Business Days ☒ 1 Business Day
OR Date Required (Rush Surcharges May Apply):
Please provide prior notification for rush TAT
**TAT is exclusive of weekends and statutory holidays*

Sample Identification	Date Sampled	Time Sampled	# of Containers	Sample Matrix	Comments/ Special Instructions	Metals and Inorganics	Metal Scan	Hydride Forming Metals	Client Custom Metals	(Check Applicable) ORPs: ☐ B-HWS ☐ Cl ☐ CN ☐ Cr^{6+} ☐ EC ☐ FOC ☐ NO_3/NO_2 ☐ Total N ☐ Hg ☐ pH ☐ SAR	Nutrients: ☐ TP ☐ NH_3 ☐ TKN ☐ NO_3 ☐ NO_2 ☐ NO_3/NO_2	Volatiles: ☐ VOC ☐ BTEX ☐ THM	CCME Fractions 1 to 4	ABNs	PAHs	Chlorophenols	PCBs	Organochlorine Pesticides	TCLP Metals/Inorganics	Sewer Use	Nitrates	MW@A
TW12N	March 1, 2016	12:10	1	GW																x	
TW12	March 1, 2016	14:00	6	GW																	x

Samples Relinquished By (Print Name and Sign): Matt Valeriote / [signature] Date: March 2, 2016 Time:
Samples Relinquished By (Print Name and Sign): Date: Time:
Samples Received By (Print Name and Sign): M. Kelly / Maggie Kelly 2016/03/2 Time: 9:15 AM
Samples Received By (Print Name and Sign): [signature] Date: 16/3/3 Time: 9:29
Page 1 of 1
N°: T014314

Document ID: DW-78-1511-009
Pink Copy - Client | Yellow Copy - AGAT | White Copy- AGAT
Date Issued: Jan 8, 2015

TOWN OF CALEDON PLANNING RECEIVED Jul 13 2021

TOWN OF CALEDON
PLANNING
RECEIVED
Jul 12, 2021

AGAT Laboratories

5835 COOPERS AVENUE
MISSISSAUGA, ONTARIO
CANADA L4Z 1Y2
TEL (905)712-5100
FAX (905)712-5122
http://www.agatlabs.com

CLIENT NAME: R.J. BURNSIDE & ASSOCIATES LTD
292 Speedvale Avenue West, Unit 7
Guelph, ON N1H1C4
(519) 823-4995

ATTENTION TO: Jim Baxter

PROJECT: 320033273

AGAT WORK ORDER: 16W074674

WATER ANALYSIS REVIEWED BY: Parvathi Malemath, Data Reviewer

DATE REPORTED: Mar 09, 2016

PAGES (INCLUDING COVER): 5

VERSION*: 1

Should you require any information regarding this analysis please contact your client services representative at (905) 712-5100

*NOTES

All samples will be disposed of within 30 days following analysis. Please contact the lab if you require additional sample storage time.

Member of: Association of Professional Engineers, Geologists and Geophysicists of Alberta (APEGGA)
Western Enviro-Agricultural Laboratory Association (WEALA)
Environmental Services Association of Alberta (ESAA)

AGAT Laboratories is accredited to ISO/IEC 17025 by the Canadian Association for Laboratory Accreditation Inc. (CALA) and/or Standards Council of Canada (SCC) for specific tests listed on the scope of accreditation. AGAT Laboratories (Mississauga) is also accredited by the Canadian Association for Laboratory Accreditation Inc. (CALA) for specific drinking water tests. Accreditations are location and parameter specific. A complete listing of parameters for each location is available from www.cala.ca and/or www.scc.ca. The tests in this report may not necessarily be included in the scope of accreditation.

Results relate only to the items tested and to all the items tested
All reportable information as specified by ISO 17025:2005 is available from AGAT Laboratories upon request

TOWN OF CALEDON
PLANNING
RECEIVED

Jul 12, 2021

AGAT Laboratories

5835 COOPERS AVENUE
MISSISSAUGA, ONTARIO
CANADA L4Z 1Y2
TEL (905)712-5100
FAX (905)712-5122
http://www.agatlabs.com

Certificate of Analysis

AGAT WORK ORDER: 16W074674

PROJECT: 320033273

CLIENT NAME: R.J. BURNSIDE & ASSOCIATES LTD

ATTENTION TO: Jim Baxter

SAMPLING SITE:

SAMPLED BY:MV

Nitrate (Water)

DATE RECEIVED: 2016-03-08

DATE REPORTED: 2016-03-09

SAMPLE DESCRIPTION:				TW4	TW11	TW8
SAMPLE TYPE:				Water	Water	Water
DATE SAMPLED:				3/7/2016	3/7/2016	3/7/2016
Parameter	Unit	G / S	RDL	7426607	7426610	7426611
Nitrate as N	mg/L		0.05	2.97	5.03	7.76

Comments: RDL - Reported Detection Limit; G / S - Guideline / Standard

Certified By:

Results relate only to the items tested and to all the items tested

TOWN OF CALEDON
PLANNING
RECEIVED
Jul 12, 2021

AGAT Laboratories
5835 COOPERS AVENUE
MISSISSAUGA, ONTARIO
CANADA L4Z 1Y2
TEL (905)712-5100
FAX (905)712-5122
http://www.agatlabs.com

Quality Assurance

CLIENT NAME: R.J. BURNSIDE & ASSOCIATES LTD
AGAT WORK ORDER: 16W074674
PROJECT: 320033273
ATTENTION TO: Jim Baxter
SAMPLING SITE:
SAMPLED BY:MV

Water Analysis

RPT Date: Mar 09, 2016			DUPLICATE				REFERENCE MATERIAL			METHOD BLANK SPIKE			MATRIX SPIKE		
PARAMETER	Batch	Sample Id	Dup #1	Dup #2	RPD	Method Blank	Measured Value	Acceptable Limits		Recovery	Acceptable Limits		Recovery	Acceptable Limits	
								Lower	Upper		Lower	Upper		Lower	Upper
Nitrate (Water)															
Nitrate as N	7427214		3.61	3.59	0.6%	< 0.05	104%	90%	110%	109%	90%	110%	101%	80%	120%

Certified By:

AGAT Laboratories is accredited to ISO/IEC 17025 by the Canadian Association for Laboratory Accreditation Inc. (CALA) and/or Standards Council of Canada (SCC) for specific tests listed on the scope of accreditation. AGAT Laboratories (Mississauga) is also accredited by the Canadian Association for Laboratory Accreditation Inc. (CALA) for specific drinking water tests. Accreditations are location and parameter specific. A complete listing of parameters for each location is available from www.cala.ca and/or www.scc.ca. The tests in this report may not necessarily be included in the scope of accreditation.

Results relate only to the items tested and to all the items tested

TOWN OF CALEDON
PLANNING
RECEIVED
Jul 12, 2021

AGAT Laboratories

5835 COOPERS AVENUE
MISSISSAUGA, ONTARIO
CANADA L4Z 1Y2
TEL (905)712-5100
FAX (905)712-5122
http://www.agatlabs.com

Method Summary

CLIENT NAME: R.J. BURNSIDE & ASSOCIATES LTD

AGAT WORK ORDER: 16W074674

PROJECT: 320033273

ATTENTION TO: Jim Baxter

SAMPLING SITE:

SAMPLED BY:MV

PARAMETER	AGAT S.O.P	LITERATURE REFERENCE	ANALYTICAL TECHNIQUE
Water Analysis			
Nitrate as N	INOR-93-6004	SM 4110 B	ION CHROMATOGRAPH

Results relate only to the items tested and to all the items tested

AGAT Laboratories

5835 Coopers Avenue
Mississauga, Ontario L4Z 1Y2
Ph: 905.712.5100 Fax: 905.712.5122
webearth.agatlabs.com

Chain of Custody Record

If this is a Drinking Water sample, please use Drinking Water Chain of Custody Form (potable water intended for human consumption)

Laboratory Use Only

Work Order #: 16W074674

Cooler Quantity:

Arrival Temperatures: 2.8 | 2.8 | 2.9 / 2.6 | 2.6 | 2.7

Custody Seal Intact: ☐Yes ☐No ☐N/A

Notes: on ice

Report Information:

Company: RJ Burnside & Associates Ltd

Contact: Jim Baxter

Address: 299 Speedvale Ave. West unit 20 Guelph Ont

Phone: Fax:

Reports to be sent to:

1. Email: jim.baxter@rjburnside.com
2. Email:

Regulatory Requirements: ☐ No Regulatory Requirement

(Please check all applicable boxes)

☐ Regulation 153/04 — Table ___ (Indicate One): ☐Ind/Com ☐Res/Park ☐Agriculture

Soil Texture (Check One): ☐Coarse ☐Fine

☐ Sewer Use: ☐Sanitary ☐Storm — Region ___ (Indicate One)

☐ Regulation 558

☐ CCME

☐ Prov. Water Quality Objectives (PWQO)

☐ Other ___ (Indicate One)

Is this submission for a **Record of Site Condition?** ☐ Yes ☒ No

Report Guideline on Certificate of Analysis ☒ Yes ☒ No

Turnaround Time (TAT) Required:

Regular TAT ☐ 5 to 7 Business Days

Rush TAT (Rush Surcharges Apply) RUSH!

☐ 3 Business Days ☐ 2 Business Days ☒ 1 Business Day

OR Date Required (Rush Surcharges May Apply):

Please provide prior notification for rush TAT

**TAT is exclusive of weekends and statutory holidays*

Project Information:

Project: 300033277

Site Location: Belfountain

Sampled By: Matt Valeriote

AGAT Quote #: PO:

Please note: If quotation number is not provided, client will be billed full price for analysis.

Invoice Information:

Bill To Same: Yes ☐ No ☐

Company:

Contact:

Address:

Email:

Sample Matrix Legend

B	Biota
GW	Ground Water
O	Oil
P	Paint
S	Soil
SD	Sediment
SW	Surface Water

(Check Applicable)

Sample Identification	Date Sampled	Time Sampled	# of Containers	Sample Matrix	Comments/ Special Instructions	Metals and Inorganics	Metal Scan	Hydride Forming Metals	Client Custom Metals	ORPs: ☐B-HWS ☐Cl⁻ ☐CN⁻ ☐Cr⁶⁺ ☐EC ☐FOC ☐NO₃/NO₂ ☐Total N ☐Hg ☐pH ☐SAR	Nutrients: ☐TP ☐NH₃ ☐TKN ☐NO₃ ☐NO₂ ☐NO₃/NO₂	Volatiles: ☐VOC ☐BTEX ☐THM	CCME Fractions 1 to 4	ABNs	PAHs	Chlorophenols	PCBs	Organochlorine Pesticides	TCLP Metals/Inorganics	Sewer Use	Nitrate
TW4	March 7 2016		1	GW																	X
TW11	"		1	GW																	X
TW8	"		1	GW																	X

Samples Relinquished By (Print Name and Sign):	Date	Time	Samples Received By (Print Name and Sign):	Date	Time
Matt Valeriote	March 8 2016		McKelly Maggie Kelly	2016/3/8	8:30 AM
McKelly Maggie Kelly	2016/3/8	12:25	[signature]	2016/03/08	12:25
[signature]	2016/03/08 1:23		Sharmin & Mai Slice 1:23		

Page 1 of 1

Nº: T 014328

Document ID: DIV-78-1527.000 Pink Copy - Client | Yellow Copy - AGAT | White Copy- AGAT Date Issued: Jan 8, 2015

TOWN OF CALEDON PLANNING RECEIVED Jul 12, 2021

TOWN OF CALEDON
PLANNING
RECEIVED
Jul 12, 2021

AGAT Laboratories

5835 COOPERS AVENUE
MISSISSAUGA, ONTARIO
CANADA L4Z 1Y2
TEL (905)712-5100
FAX (905)712-5122
http://www.agatlabs.com

CLIENT NAME: R.J. BURNSIDE & ASSOCIATES LTD
292 Speedvale Avenue West, Unit 7
Guelph, ON N1H1C4
(519) 823-4995

ATTENTION TO: Jim Baxter

PROJECT: 300033273

AGAT WORK ORDER: 16W074853

WATER ANALYSIS REVIEWED BY: Amanjot Bhela, Inorganic Coordinator

DATE REPORTED: Mar 10, 2016

PAGES (INCLUDING COVER): 5

VERSION*: 1

Should you require any information regarding this analysis please contact your client services representative at (905) 712-5100

*NOTES

All samples will be disposed of within 30 days following analysis. Please contact the lab if you require additional sample storage time.

Member of: Association of Professional Engineers, Geologists and Geophysicists of Alberta (APEGGA)
Western Enviro-Agricultural Laboratory Association (WEALA)
Environmental Services Association of Alberta (ESAA)

AGAT Laboratories is accredited to ISO/IEC 17025 by the Canadian Association for Laboratory Accreditation Inc. (CALA) and/or Standards Council of Canada (SCC) for specific tests listed on the scope of accreditation. AGAT Laboratories (Mississauga) is also accredited by the Canadian Association for Laboratory Accreditation Inc. (CALA) for specific drinking water tests. Accreditations are location and parameter specific. A complete listing of parameters for each location is available from www.cala.ca and/or www.scc.ca. The tests in this report may not necessarily be included in the scope of accreditation.

Results relate only to the items tested and to all the items tested
All reportable information as specified by ISO 17025:2005 is available from AGAT Laboratories upon request

TOWN OF CALEDON
PLANNING
RECEIVED

Jul 12, 2021

AGAT Laboratories

Certificate of Analysis

AGAT WORK ORDER: 16W074853

PROJECT: 300033273

5835 COOPERS AVENUE
MISSISSAUGA, ONTARIO
CANADA L4Z 1Y2
TEL (905)712-5100
FAX (905)712-5122
http://www.agatlabs.com

CLIENT NAME: R.J. BURNSIDE & ASSOCIATES LTD

ATTENTION TO: Jim Baxter

SAMPLING SITE:

SAMPLED BY:

Nitrate (Water)

DATE RECEIVED: 2016-03-09

DATE REPORTED: 2016-03-10

		SAMPLE DESCRIPTION:		TW5	TW7	TW9		TW3		TW2
		SAMPLE TYPE:		Water	Water	Water		Water		Water
		DATE SAMPLED:		3/8/2016	3/8/2016	3/8/2016		3/8/2016		3/8/2016
Parameter	Unit	G / S	RDL	7430208	7430212	7430214	RDL	7430216	RDL	7430218
Nitrate as N	mg/L		0.05	7.80	7.27	3.41	0.25	0.54	0.05	0.58

Comments: RDL - Reported Detection Limit; G / S - Guideline / Standard

7430216 Elevated RDL indicates the degree of sample dilution prior to the analysis in order to keep analyte within the calibration range of the instrument and to reduce matrix interference.

Certified By: Amanjot Bhela

Results relate only to the items tested and to all the items tested

TOWN OF CALEDON
PLANNING
RECEIVED
Jul 12, 2021

AGAT Laboratories
5835 COOPERS AVENUE
MISSISSAUGA, ONTARIO
CANADA L4Z 1Y2
TEL (905)712-5100
FAX (905)712-5122
http://www.agatlabs.com

Quality Assurance

CLIENT NAME: R.J. BURNSIDE & ASSOCIATES LTD
AGAT WORK ORDER: 16W074853
PROJECT: 300033273
ATTENTION TO: Jim Baxter
SAMPLING SITE:
SAMPLED BY:

Water Analysis

RPT Date: Mar 10, 2016			DUPLICATE				REFERENCE MATERIAL			METHOD BLANK SPIKE			MATRIX SPIKE		
PARAMETER	Batch	Sample Id	Dup #1	Dup #2	RPD	Method Blank	Measured Value	Acceptable Limits		Recovery	Acceptable Limits		Recovery	Acceptable Limits	
								Lower	Upper		Lower	Upper		Lower	Upper
Nitrate (Water)															
Nitrate as N	7430216	7430216	0.54	0.56	3.6%	< 0.05	108%	90%	110%	108%	90%	110%	110%	80%	120%

Certified By: Amanjot Bhela

AGAT Laboratories is accredited to ISO/IEC 17025 by the Canadian Association for Laboratory Accreditation Inc. (CALA) and/or Standards Council of Canada (SCC) for specific tests listed on the scope of accreditation. AGAT Laboratories (Mississauga) is also accredited by the Canadian Association for Laboratory Accreditation Inc. (CALA) for specific drinking water tests. Accreditations are location and parameter specific. A complete listing of parameters for each location is available from www.cala.ca and/or www.scc.ca. The tests in this report may not necessarily be included in the scope of accreditation.

Results relate only to the items tested and to all the items tested

TOWN OF CALEDON
PLANNING
RECEIVED
Jul 12, 2021

AGAT Laboratories

5835 COOPERS AVENUE
MISSISSAUGA, ONTARIO
CANADA L4Z 1Y2
TEL (905)712-5100
FAX (905)712-5122
http://www.agatlabs.com

Method Summary

CLIENT NAME: R.J. BURNSIDE & ASSOCIATES LTD

AGAT WORK ORDER: 16W074853

PROJECT: 300033273

ATTENTION TO: Jim Baxter

SAMPLING SITE:

SAMPLED BY:

PARAMETER	AGAT S.O.P	LITERATURE REFERENCE	ANALYTICAL TECHNIQUE
Water Analysis			
Nitrate as N	INOR-93-6004	SM 4110 B	ION CHROMATOGRAPH

Results relate only to the items tested and to all the items tested

AGAT Laboratories

5835 Coopers Avenue
Mississauga, Ontario L4Z 1Y2
Ph: 905.712.5100 Fax: 905.712.5122
webearth.agatlabs.com

Chain of Custody Record

If this is a Drinking Water sample, please use Drinking Water Chain of Custody Form (potable water intended for human consumption)

Laboratory Use Only

Work Order #: 16W074853

Cooler Quantity:

Arrival Temperatures: 7.6 | 7.0 | 7.2
7.1 | 7.4 | 6.9

Custody Seal Intact: ☐Yes ☐No ☐N/A

Notes: on ice

Report Information:

Company: RJ Burnside + Associates Ltd
Contact: Jim Baxter
Address: 299 Speedvale Ave. West unit 20
Guelph, ONT
Phone: Fax:
Reports to be sent to:
1. Email: jim.baxter@rjburnside.com
2. Email:

Regulatory Requirements: ☐ No Regulatory Requirement

(Please check all applicable boxes)

☐ Regulation 153/04
Table ____ (Indicate One)
☐ Ind/Com
☐ Res/Park
☐ Agriculture
Soil Texture (Check One)
☐ Coarse
☐ Fine

☐ Sewer Use
☐ Sanitary
☐ Storm
Region ____ (Indicate One)

☐ Regulation 558
☐ CCME
☐ Prov. Water Quality Objectives (PWQO)
☐ Other
____ (Indicate One)

Is this submission for a **Record of Site Condition?** ☐ Yes ☒ No

Report Guideline on *Certificate of Analysis* ☐ Yes ☒ No

Turnaround Time (TAT) Required:

Regular TAT ☐ 5 to 7 Business Days

Rush TAT (Rush Surcharges Apply) RUSH!

☐ 3 Business Days ☐ 2 Business Days ☒ 1 Business Day

OR Date Required (Rush Surcharges May Apply):

Please provide prior notification for rush TAT
**TAT is exclusive of weekends and statutory holidays*

Project Information:

Project: 300033273
Site Location: Belfountain
Sampled By: Matt Valeriote
AGAT Quote #: PO:
Please note: If quotation number is not provided, client will be billed full price for analysis.

Invoice Information:

Bill To Same: Yes ☒ No ☐

Company:
Contact:
Address:
Email:

Sample Matrix Legend

B	Biota
GW	Ground Water
O	Oil
P	Paint
S	Soil
SD	Sediment
SW	Surface Water

(Check Applicable)

Sample Identification	Date Sampled	Time Sampled	# of Containers	Sample Matrix	Comments/ Special Instructions	Metals and Inorganics	Metal Scan	Hydride Forming Metals	Client Custom Metals	ORPs: ☐B-HWS ☐Cl⁻ ☐CN⁻ ☐Cr⁶⁺ ☐EC ☐FOC ☐NO₃/NO₂ ☐Total N ☐Hg ☐pH ☐SAR	Nutrients: ☐TP ☐NH₃ ☐TKN ☐NO₃ ☐NO₂ ☐NO₃/NO₂	Volatiles: ☐VOC ☐BTEX ☐THM	CCME Fractions 1 to 4	ABNs	PAHs	Chlorophenols	PCBs	Organochlorine Pesticides	TCLP Metals/Inorganics	Sewer Use	Nitrate
TW5	March 9, 2016	10:40	1	GW																	X
TW7	"	11:15	1	GW																	X
TW9	"	11:50	1	GW																	X
TW3	"	12:30	1	GW																	X
TW2	"	13:00	1	GW																	X

Samples Relinquished By (Print Name and Sign):	Date	Time	Samples Received By (Print Name and Sign):	Date	Time
Matt Valeriote / [signature]	March 9, 2016		M. Kelly Maggie Kelly	2016/3/8	4:10
Samples Relinquished By (Print Name and Sign):	Date	Time	Samples Received By (Print Name and Sign):	Date	Time
			Simon [signature]	16/10/3	944 PM

Page 1 of 1

N° T014329

TOWN OF CALEDON PLANNING RECEIVED Jul 22, 2021

TOWN OF CALEDON
PLANNING
RECEIVED
Jul 12, 2021

AGAT Laboratories

5835 COOPERS AVENUE
MISSISSAUGA, ONTARIO
CANADA L4Z 1Y2
TEL (905)712-5100
FAX (905)712-5122
http://www.agatlabs.com

CLIENT NAME: R.J. BURNSIDE & ASSOCIATES LTD
292 Speedvale Avenue West, Unit 7
Guelph, ON N1H1C4
(519) 823-4995

ATTENTION TO: Dwight Smikle

PROJECT: Belfountain

AGAT WORK ORDER: 16W082447

WATER ANALYSIS REVIEWED BY: Sofka Pehlyova, Senior Analyst

DATE REPORTED: Apr 06, 2016

PAGES (INCLUDING COVER): 5

VERSION*: 1

Should you require any information regarding this analysis please contact your client services representative at (905) 712-5100

*NOTES

All samples will be disposed of within 30 days following analysis. Please contact the lab if you require additional sample storage time.

Member of: Association of Professional Engineers, Geologists and Geophysicists of Alberta (APEGGA)
Western Enviro-Agricultural Laboratory Association (WEALA)
Environmental Services Association of Alberta (ESAA)

AGAT Laboratories is accredited to ISO/IEC 17025 by the Canadian Association for Laboratory Accreditation Inc. (CALA) and/or Standards Council of Canada (SCC) for specific tests listed on the scope of accreditation. AGAT Laboratories (Mississauga) is also accredited by the Canadian Association for Laboratory Accreditation Inc. (CALA) for specific drinking water tests. Accreditations are location and parameter specific. A complete listing of parameters for each location is available from www.cala.ca and/or www.scc.ca. The tests in this report may not necessarily be included in the scope of accreditation.

Results relate only to the items tested and to all the items tested
All reportable information as specified by ISO 17025:2005 is available from AGAT Laboratories upon request

TOWN OF CALEDON
PLANNING
RECEIVED

Jul 12, 2021

AGAT Laboratories

5835 COOPERS AVENUE
MISSISSAUGA, ONTARIO
CANADA L4Z 1Y2
TEL (905)712-5100
FAX (905)712-5122
http://www.agatlabs.com

Certificate of Analysis

AGAT WORK ORDER: 16W082447

PROJECT: Belfountain

CLIENT NAME: R.J. BURNSIDE & ASSOCIATES LTD

ATTENTION TO: Dwight Smikle

SAMPLING SITE:

SAMPLED BY:

Nitrate (Water)

DATE RECEIVED: 2016-04-05

DATE REPORTED: 2016-04-05

		SAMPLE DESCRIPTION:		TW11-1 hr	TW11-26 hr	TW6-1 hr	TW6-26 hr
		SAMPLE TYPE:		Water	Water	Water	Water
		DATE SAMPLED:		3/30/2016	3/31/2016	4/1/2016	4/2/2016
Parameter	Unit	G / S	RDL	7471112	7471114	7471115	7471117
Nitrate as N	mg/L		0.05	3.46	3.37	7.89	8.23

Comments: RDL - Reported Detection Limit; G / S - Guideline / Standard

Certified By: Sofiya Pehlyova

Results relate only to the items tested and to all the items tested

TOWN OF CALEDON
PLANNING
RECEIVED
Jul 12, 2021

AGAT Laboratories
5835 COOPERS AVENUE
MISSISSAUGA, ONTARIO
CANADA L4Z 1Y2
TEL (905)712-5100
FAX (905)712-5122
http://www.agatlabs.com

Quality Assurance

CLIENT NAME: R.J. BURNSIDE & ASSOCIATES LTD
AGAT WORK ORDER: 16W082447
PROJECT: Belfountain
ATTENTION TO: Dwight Smikle
SAMPLING SITE:
SAMPLED BY:

Water Analysis

RPT Date:			DUPLICATE				REFERENCE MATERIAL			METHOD BLANK SPIKE			MATRIX SPIKE		
PARAMETER	Batch	Sample Id	Dup #1	Dup #2	RPD	Method Blank	Measured Value	Acceptable Limits		Recovery	Acceptable Limits		Recovery	Acceptable Limits	
								Lower	Upper		Lower	Upper		Lower	Upper
Nitrate (Water)															
Nitrate as N	7469191		1.99	1.92	3.6%	< 0.05	99%	90%	110%	108%	90%	110%	106%	80%	120%

Certified By: Sofiya Pehlyova

AGAT Laboratories is accredited to ISO/IEC 17025 by the Canadian Association for Laboratory Accreditation Inc. (CALA) and/or Standards Council of Canada (SCC) for specific tests listed on the scope of accreditation. AGAT Laboratories (Mississauga) is also accredited by the Canadian Association for Laboratory Accreditation Inc. (CALA) for specific drinking water tests. Accreditations are location and parameter specific. A complete listing of parameters for each location is available from www.cala.ca and/or www.scc.ca. The tests in this report may not necessarily be included in the scope of accreditation.

Results relate only to the items tested and to all the items tested

TOWN OF CALEDON
PLANNING
RECEIVED
Jul 12, 2021

AGAT Laboratories

5835 COOPERS AVENUE
MISSISSAUGA, ONTARIO
CANADA L4Z 1Y2
TEL (905)712-5100
FAX (905)712-5122
http://www.agatlabs.com

Method Summary

CLIENT NAME: R.J. BURNSIDE & ASSOCIATES LTD

AGAT WORK ORDER: 16W082447

PROJECT: Belfountain

ATTENTION TO: Dwight Smikle

SAMPLING SITE:

SAMPLED BY:

PARAMETER	AGAT S.O.P	LITERATURE REFERENCE	ANALYTICAL TECHNIQUE
Water Analysis			
Nitrate as N	INOR-93-6004	SM 4110 B	ION CHROMATOGRAPH

Results relate only to the items tested and to all the items tested

AGAT Laboratories
5835 Coopers Avenue
Mississauga, Ontario L4Z 1Y2
Ph: 905.712.5100 Fax: 905.712.5122
webearth.agatlabs.com

RUSH

Chain of Custody Record

If this is a Drinking Water sample, please use Drinking Water Chain of Custody Form (potable water intended for human consumption)

Laboratory Use Only
Work Order #: 16W082447
Cooler Quantity:
Arrival Temperatures: 7.5 | 4.9 | 5.6
4.9 | 5.5 | 5.7
Custody Seal Intact: ☐Yes ☐No ☐N/A
Notes: on ice

Report Information:
Company: Burnside
Contact: Dwight Smikle
Address: 292 Speedvale Ave West
Geulph, ON
Phone: 519 823 4995 Fax:
Reports to be sent to:
1. Email: Dwight.Smikle@rjburnside.com
2. Email: Sean.Quinlan@rjburnside.com

Regulatory Requirements:
☐4 No Regulatory Requirement
(Please check all applicable boxes)

☐ Regulation 153/04
Table (Indicate One) ☐Ind/Com ☐Res/Park ☐Agriculture
Soil Texture (Check One) ☐Coarse ☐Fine

☐ Sewer Use
☐Sanitary ☐Storm
Region (Indicate One)

☐ Regulation 558
☐ CCME
☐ Prov. Water Quality Objectives (PWQO)
☐ Other
(Indicate One)

Is this submission for a **Record of Site Condition?** ☐ Yes ☐4 No

Report Guideline on *Certificate of Analysis* ☐ Yes ☐4 No

Turnaround Time (TAT) Required:
Regular TAT ☐ 5 to 7 Business Days
Rush TAT (Rush Surcharges Apply)
☐ 3 Business Days ☐ 2 Business Days ☐4 1 Business Day
OR Date Required (Rush Surcharges May Apply):
Please provide prior notification for rush TAT
**TAT is exclusive of weekends and statutory holidays*

Project Information:
Project: Belfountain
Site Location: 300033273
Sampled By: Sean Quinlan
AGAT Quote #: PO:
Please note: If quotation number is not provided, client will be billed full price for analysis.

Invoice Information:
Bill To Same: Yes ☐4 No ☐
Company:
Contact:
Address:
Email:

Sample Matrix Legend
B Biota
GW Ground Water
O Oil
P Paint
S Soil
SD Sediment
SW Surface Water

Sample Identification	Date Sampled	Time Sampled	# of Containers	Sample Matrix	Comments/ Special Instructions	Y / N	Field Filtered - Metals, Hg, CrVI (Please Circle)	Metals and Inorganics	Metal Scan	Hydride Forming Metals	Client Custom Metals	(Check Applicable) ORPs: ☐B-HWS ☐Cl ☐CN ☐Cr^{6+} ☐EC ☐FOC ☐NO_3/NO_2 ☐Total N ☐Hg ☐pH ☐SAR	Nutrients: ☐TP ☐NH_3 ☐TKN ☐NO_3 ☐NO_2 ☐NO_3/NO_2	Volatiles: ☐VOC ☐BTEX ☐THM	CCME Fractions 1 to 4	ABNs	PAHs	Chlorophenols	PCBs	Organochlorine Pesticides	TCLP Metals/Inorganics	Sewer Use	Nitrate
TW11 - 1 hr	30 Mar 16	12:30	1	GW		N																4
TW11 - 26 hr	31 Mar 16	13:00	1	GW		N																4
TW6 - 1 hr	1 Apr 16	12:00	1	GW		N																4
TW6 - 26 hr	2 Apr 16	12:00	1	GW		N																4
24 HR RUSH TAT REQUESTED																						

Samples Relinquished By (Print Name and Sign)	Date	Time	Samples Received By (Print Name and Sign)	Date	Time
Sean Quinlan	4 April 16	10:55	M. Kelly Maggie Kelly	2016/04/04	4:30 pm
Samples Relinquished By (Print Name and Sign):	Date	Time	Samples Received By (Print Name and Sign): Simon	16/5/4	900
Samples Relinquished By (Print Name and Sign):	Date	Time	Samples Received By (Print Name and Sign):	Date	Time

Page 1 of 1
N°:

TOWN OF CALEDON
PLANNING
RECEIVED
JUL 12, 2021

TOWN OF CALEDON
PLANNING
RECEIVED
Jul 12, 2021

AGAT Laboratories

5835 COOPERS AVENUE
MISSISSAUGA, ONTARIO
CANADA L4Z 1Y2
TEL (905)712-5100
FAX (905)712-5122
http://www.agatlabs.com

CLIENT NAME: R.J. BURNSIDE & ASSOCIATES LTD
292 Speedvale Avenue West, Unit 7
Guelph, ON N1H1C4
(519) 823-4995

ATTENTION TO: Dwight Smikle

PROJECT: 300033273

AGAT WORK ORDER: 16W138240

WATER ANALYSIS REVIEWED BY: Sofka Pehlyova, Senior Analyst

DATE REPORTED: Sep 26, 2016

PAGES (INCLUDING COVER): 12

VERSION*: 1

Should you require any information regarding this analysis please contact your client services representative at (905) 712-5100

*NOTES

All samples will be disposed of within 30 days following analysis. Please contact the lab if you require additional sample storage time.

Member of: Association of Professional Engineers, Geologists and Geophysicists of Alberta (APEGGA)
Western Enviro-Agricultural Laboratory Association (WEALA)
Environmental Services Association of Alberta (ESAA)

AGAT Laboratories is accredited to ISO/IEC 17025 by the Canadian Association for Laboratory Accreditation Inc. (CALA) and/or Standards Council of Canada (SCC) for specific tests listed on the scope of accreditation. AGAT Laboratories (Mississauga) is also accredited by the Canadian Association for Laboratory Accreditation Inc. (CALA) for specific drinking water tests. Accreditations are location and parameter specific. A complete listing of parameters for each location is available from www.cala.ca and/or www.scc.ca. The tests in this report may not necessarily be included in the scope of accreditation.

Results relate only to the items tested and to all the items tested
All reportable information as specified by ISO 17025:2005 is available from AGAT Laboratories upon request

TOWN OF CALEDON
PLANNING
RECEIVED
Jul 12, 2021

AGAT Laboratories

5835 COOPERS AVENUE
MISSISSAUGA, ONTARIO
CANADA L4Z 1Y2
TEL (905)712-5100
FAX (905)712-5122
http://www.agatlabs.com

Certificate of Analysis

AGAT WORK ORDER: 16W138240

PROJECT: 300033273

CLIENT NAME: R.J. BURNSIDE & ASSOCIATES LTD

ATTENTION TO: Dwight Smikle

SAMPLING SITE:

SAMPLED BY:

Water Quality Assessment

DATE RECEIVED: 2016-09-16

DATE REPORTED: 2016-09-26

SAMPLE DESCRIPTION:				TW5		TW2		TW7	TW8		TW9
SAMPLE TYPE:				Water		Water		Water	Water		Water
DATE SAMPLED:				9/15/2016		9/15/2016		9/15/2016	9/15/2016		9/15/2016
Parameter	Unit	G / S	RDL	7853172	RDL	7853176	RDL	7853182	7853189	RDL	7853195
Electrical Conductivity	uS/cm		2	667	2	575	2	606	598	2	594
pH	pH Units		NA	8.08	NA	8.17	NA	8.14	8.08	NA	8.15
Saturation pH				7.04		6.96		7.01	7.01		7.00
Langelier Index				1.04		1.21		1.13	1.07		1.15
Total Hardness (as CaCO3)	mg/L		0.5	280	0.5	294	0.5	284	296	0.5	289
Total Dissolved Solids	mg/L		20	358	20	308	20	334	364	20	332
Alkalinity (as CaCO3)	mg/L		5	237	5	271	5	247	238	5	249
Bicarbonate (as CaCO3)	mg/L		5	237	5	271	5	247	238	5	249
Carbonate (as CaCO3)	mg/L		5	<5	5	<5	5	<5	<5	5	<5
Hydroxide (as CaCO3)	mg/L		5	<5	5	<5	5	<5	<5	5	<5
Fluoride	mg/L		0.10	<0.10	0.05	<0.05	0.10	<0.10	<0.10	0.05	<0.05
Chloride	mg/L		0.20	41.2	0.10	5.96	0.20	17.4	9.46	0.10	9.76
Nitrate as N	mg/L		0.10	7.18	0.05	0.82	0.10	6.97	7.85	0.05	2.17
Nitrite as N	mg/L		0.10	<0.10	0.05	<0.05	0.10	<0.10	<0.10	0.05	<0.05
Bromide	mg/L		0.10	<0.10	0.05	<0.05	0.10	<0.10	<0.10	0.05	<0.05
Sulphate	mg/L		0.20	20.1	0.10	25.6	0.20	18.5	43.5	0.10	45.3
Ortho Phosphate as P	mg/L		0.20	<0.20	0.10	<0.10	0.20	<0.20	<0.20	0.10	<0.10
Reactive Silica	mg/L		0.05	7.43	0.05	11.8	0.05	7.12	7.49	0.05	8.77
Ammonia as N	mg/L		0.02	<0.02	0.02	<0.02	0.02	<0.02	<0.02	0.02	<0.02
Total Phosphorus	mg/L		0.05	<0.05	0.05	0.05	0.05	<0.05	0.06	0.05	<0.05
Total Organic Carbon	mg/L		0.5	0.6	0.5	1.1	0.5	1.0	1.5	0.5	0.9
Colour	TCU		5	<5	5	<5	5	<5	<5	5	<5
Turbidity	NTU		0.5	1.7	0.5	110	0.5	4.8	113	0.5	2.4
Calcium	mg/L		0.05	76.6	0.05	77.6	0.05	77.5	80.6	0.05	76.2
Magnesium	mg/L		0.05	21.6	0.05	24.3	0.05	21.9	22.9	0.05	23.9
Sodium	mg/L		0.05	16.0	0.05	3.10	0.05	6.44	3.22	0.05	4.03
Potassium	mg/L		0.05	0.90	0.05	1.12	0.05	0.87	1.17	0.05	0.89
Aluminum	mg/L		0.004	0.010	0.004	0.014	0.004	0.012	0.011	0.004	0.010
Antimony	mg/L		0.003	<0.003	0.003	<0.003	0.003	<0.003	<0.003	0.003	<0.003
Arsenic	mg/L		0.003	<0.003	0.003	<0.003	0.003	<0.003	0.003	0.003	<0.003

Certified By: Sofiya Pehlyova

Results relate only to the items tested and to all the items tested

TOWN OF CALEDON
PLANNING
RECEIVED
Jul 12, 2021

AGAT Laboratories

5835 COOPERS AVENUE
MISSISSAUGA, ONTARIO
CANADA L4Z 1Y2
TEL (905)712-5100
FAX (905)712-5122
http://www.agatlabs.com

Certificate of Analysis

AGAT WORK ORDER: 16W138240

PROJECT: 300033273

CLIENT NAME: R.J. BURNSIDE & ASSOCIATES LTD

ATTENTION TO: Dwight Smikle

SAMPLING SITE:

SAMPLED BY:

Water Quality Assessment

DATE RECEIVED: 2016-09-16

DATE REPORTED: 2016-09-26

SAMPLE DESCRIPTION:				TW5		TW2		TW7	TW8		TW9
SAMPLE TYPE:				Water		Water		Water	Water		Water
DATE SAMPLED:				9/15/2016		9/15/2016		9/15/2016	9/15/2016		9/15/2016
Parameter	Unit	G / S	RDL	7853172	RDL	7853176	RDL	7853182	7853189	RDL	7853195
Barium	mg/L		0.002	0.112	0.002	0.092	0.002	0.099	0.085	0.002	0.074
Beryllium	mg/L		0.001	<0.001	0.001	<0.001	0.001	<0.001	<0.001	0.001	<0.001
Boron	mg/L		0.010	<0.010	0.010	<0.010	0.010	<0.010	0.022	0.010	0.010
Cadmium	mg/L		0.001	<0.001	0.001	<0.001	0.001	<0.001	<0.001	0.001	<0.001
Chromium	mg/L		0.003	<0.003	0.003	<0.003	0.003	<0.003	<0.003	0.003	<0.003
Cobalt	mg/L		0.001	<0.001	0.001	<0.001	0.001	<0.001	<0.001	0.001	<0.001
Copper	mg/L		0.003	<0.003	0.003	<0.003	0.003	<0.003	<0.003	0.003	<0.003
Iron	mg/L		0.010	<0.010	0.010	<0.010	0.010	<0.010	<0.010	0.010	<0.010
Lead	mg/L		0.002	<0.002	0.002	<0.002	0.002	<0.002	<0.002	0.002	<0.002
Manganese	mg/L		0.002	<0.002	0.002	0.003	0.002	<0.002	0.005	0.002	<0.002
Mercury	mg/L		0.0001	<0.0001	0.0001	<0.0001	0.0001	<0.0001	<0.0001	0.0001	<0.0001
Molybdenum	mg/L		0.002	<0.002	0.002	<0.002	0.002	<0.002	<0.002	0.002	<0.002
Nickel	mg/L		0.003	<0.003	0.003	<0.003	0.003	<0.003	<0.003	0.003	<0.003
Selenium	mg/L		0.004	<0.004	0.004	<0.004	0.004	<0.004	<0.004	0.004	<0.004
Silver	mg/L		0.002	<0.002	0.002	<0.002	0.002	<0.002	<0.002	0.002	<0.002
Strontium	mg/L		0.005	0.155	0.005	0.134	0.005	0.124	1.66	0.005	0.279
Thallium	mg/L		0.006	<0.006	0.006	<0.006	0.006	<0.006	<0.006	0.006	<0.006
Tin	mg/L		0.002	<0.002	0.002	<0.002	0.002	<0.002	<0.002	0.002	<0.002
Titanium	mg/L		0.002	<0.002	0.002	<0.002	0.002	<0.002	<0.002	0.002	<0.002
Tungsten	mg/L		0.010	<0.010	0.010	<0.010	0.010	<0.010	<0.010	0.010	<0.010
Uranium	mg/L		0.002	<0.002	0.002	<0.002	0.002	<0.002	<0.002	0.002	<0.002
Vanadium	mg/L		0.002	<0.002	0.002	<0.002	0.002	<0.002	<0.002	0.002	<0.002
Zinc	mg/L		0.005	0.016	0.005	0.009	0.005	0.020	0.024	0.005	0.028
Zirconium	mg/L		0.004	<0.004	0.004	<0.004	0.004	<0.004	<0.004	0.004	<0.004
% Difference/ Ion Balance	%		NA	3.91	NA	1.18	NA	2.78	3.31	NA	3.13

Certified By: Sofiya Pehlyova

Results relate only to the items tested and to all the items tested

TOWN OF CALEDON
PLANNING
RECEIVED

Jul 12, 2021

AGAT Laboratories

5835 COOPERS AVENUE
MISSISSAUGA, ONTARIO
CANADA L4Z 1Y2
TEL (905)712-5100
FAX (905)712-5122
http://www.agatlabs.com

Certificate of Analysis

AGAT WORK ORDER: 16W138240

PROJECT: 300033273

CLIENT NAME: R.J. BURNSIDE & ASSOCIATES LTD

ATTENTION TO: Dwight Smikle

SAMPLING SITE:

SAMPLED BY:

Water Quality Assessment

DATE RECEIVED: 2016-09-16

DATE REPORTED: 2016-09-26

		SAMPLE DESCRIPTION:		TW11
		SAMPLE TYPE:		Water
		DATE SAMPLED:		9/15/2016
Parameter	Unit	G / S	RDL	7853203
Electrical Conductivity	uS/cm		2	589
pH	pH Units		NA	8.20
Saturation pH				6.99
Langelier Index				1.21
Total Hardness (as CaCO3)	mg/L		0.5	286
Total Dissolved Solids	mg/L		20	314
Alkalinity (as CaCO3)	mg/L		5	258
Bicarbonate (as CaCO3)	mg/L		5	258
Carbonate (as CaCO3)	mg/L		5	<5
Hydroxide (as CaCO3)	mg/L		5	<5
Fluoride	mg/L		0.05	<0.05
Chloride	mg/L		0.10	12.7
Nitrate as N	mg/L		0.05	4.08
Nitrite as N	mg/L		0.05	<0.05
Bromide	mg/L		0.05	<0.05
Sulphate	mg/L		0.10	21.3
Ortho Phosphate as P	mg/L		0.10	<0.10
Reactive Silica	mg/L		0.05	7.88
Ammonia as N	mg/L		0.02	<0.02
Total Phosphorus	mg/L		0.05	<0.05
Total Organic Carbon	mg/L		0.5	0.8
Colour	TCU		5	<5
Turbidity	NTU		0.5	4.9
Calcium	mg/L		0.05	77.5
Magnesium	mg/L		0.05	22.4
Sodium	mg/L		0.05	5.49
Potassium	mg/L		0.05	0.97
Aluminum	mg/L		0.004	0.013
Antimony	mg/L		0.003	<0.003
Arsenic	mg/L		0.003	<0.003

Certified By: Sofiya Pehlyova

Results relate only to the items tested and to all the items tested

TOWN OF CALEDON
PLANNING
RECEIVED

Jul 12, 2021

AGAT Laboratories

5835 COOPERS AVENUE
MISSISSAUGA, ONTARIO
CANADA L4Z 1Y2
TEL (905)712-5100
FAX (905)712-5122
http://www.agatlabs.com

Certificate of Analysis

AGAT WORK ORDER: 16W138240

PROJECT: 300033273

CLIENT NAME: R.J. BURNSIDE & ASSOCIATES LTD

ATTENTION TO: Dwight Smikle

SAMPLING SITE:

SAMPLED BY:

Water Quality Assessment

DATE RECEIVED: 2016-09-16

DATE REPORTED: 2016-09-26

		SAMPLE DESCRIPTION:		TW11
		SAMPLE TYPE:		Water
		DATE SAMPLED:		9/15/2016
Parameter	Unit	G / S	RDL	7853203
Barium	mg/L		0.002	0.059
Beryllium	mg/L		0.001	<0.001
Boron	mg/L		0.010	<0.010
Cadmium	mg/L		0.001	<0.001
Chromium	mg/L		0.003	<0.003
Cobalt	mg/L		0.001	<0.001
Copper	mg/L		0.003	<0.003
Iron	mg/L		0.010	<0.010
Lead	mg/L		0.002	<0.002
Manganese	mg/L		0.002	<0.002
Mercury	mg/L		0.0001	<0.0001
Molybdenum	mg/L		0.002	<0.002
Nickel	mg/L		0.003	<0.003
Selenium	mg/L		0.004	<0.004
Silver	mg/L		0.002	<0.002
Strontium	mg/L		0.005	0.128
Thallium	mg/L		0.006	<0.006
Tin	mg/L		0.002	<0.002
Titanium	mg/L		0.002	<0.002
Tungsten	mg/L		0.010	<0.010
Uranium	mg/L		0.002	<0.002
Vanadium	mg/L		0.002	<0.002
Zinc	mg/L		0.005	0.016
Zirconium	mg/L		0.004	<0.004
% Difference/ Ion Balance	%		NA	2.28

Certified By: Sofiya Pehlyova

Results relate only to the items tested and to all the items tested

TOWN OF CALEDON
PLANNING
RECEIVED

Jul 12, 2021

AGAT Laboratories

5835 COOPERS AVENUE
MISSISSAUGA, ONTARIO
CANADA L4Z 1Y2
TEL (905)712-5100
FAX (905)712-5122
http://www.agatlabs.com

Certificate of Analysis

AGAT WORK ORDER: 16W138240

PROJECT: 300033273

CLIENT NAME: R.J. BURNSIDE & ASSOCIATES LTD

ATTENTION TO: Dwight Smikle

SAMPLING SITE:

SAMPLED BY:

Water Quality Assessment

DATE RECEIVED: 2016-09-16

DATE REPORTED: 2016-09-26

Comments: RDL - Reported Detection Limit; G / S - Guideline / Standard

7853172 Elevated RDLs for Anions indicate the degree of sample dilutions prior to analyses to keep analytes within the calibration range, reduce matrix interference and/or to avoid contaminating the instrument.

Turbidity Analysis: Hold time of 48 hours for this parameter was exceeded. Samples were received and analyzed past hold time. Review data with discretion.

7853182 Elevated RDLs for Anions indicate the degree of sample dilutions prior to analyses to keep analytes within the calibration range, reduce matrix interference and/or to avoid contaminating the instrument.

Turbidity Analysis: Hold time of 48 hours for this parameter was exceeded. Samples were received and analyzed past hold time. Review data with discretion.

Certified By: Sofiya Pehlyova

Results relate only to the items tested and to all the items tested

TOWN OF CALEDON
PLANNING
RECEIVED
Jul 12, 2021

AGAT Laboratories

5835 COOPERS AVENUE
MISSISSAUGA, ONTARIO
CANADA L4Z 1Y2
TEL (905)712-5100
FAX (905)712-5122
http://www.agatlabs.com

Quality Assurance

CLIENT NAME: R.J. BURNSIDE & ASSOCIATES LTD

AGAT WORK ORDER: 16W138240

PROJECT: 300033273

ATTENTION TO: Dwight Smikle

SAMPLING SITE:

SAMPLED BY:

Water Analysis

RPT Date: Sep 26, 2016

PARAMETER	Batch	Sample Id	DUPLICATE			Method Blank	REFERENCE MATERIAL			METHOD BLANK SPIKE			MATRIX SPIKE		
			Dup #1	Dup #2	RPD		Measured Value	Acceptable Limits		Recovery	Acceptable Limits		Recovery	Acceptable Limits	
								Lower	Upper		Lower	Upper		Lower	Upper
Water Quality Assessment															
Electrical Conductivity	7854077		1770	1760	0.6%	< 2	97%	80%	120%	NA			NA		
pH	7854077		7.24	7.16	1.1%	NA	99%	90%	110%	NA			NA		
Total Dissolved Solids	7853217		364	360	1.1%	< 20	96%	80%	120%	NA			NA		
Alkalinity (as CaCO3)	7854077		777	784	0.9%	< 5	95%	80%	120%	NA			NA		
Bicarbonate (as CaCO3)	7854077		777	784	0.9%	< 5	NA			NA			NA		
Carbonate (as CaCO3)	7854077		<5	<5	NA	< 5	NA			NA			NA		
Hydroxide (as CaCO3)	7854077		<5	<5	NA	< 5	NA			NA			NA		
Fluoride	7857463		<0.25	<0.25	NA	< 0.05	95%	90%	110%	97%	90%	110%	99%	80%	120%
Chloride	7857463		129	129	0.0%	< 0.10	95%	90%	110%	103%	90%	110%	102%	80%	120%
Nitrate as N	7857463		14.6	14.7	0.7%	< 0.05	93%	90%	110%	103%	90%	110%	110%	80%	120%
Nitrite as N	7857463		<0.25	<0.25	NA	< 0.05	NA	90%	110%	90%	90%	110%	93%	80%	120%
Bromide	7857463		<0.25	<0.25	NA	< 0.05	106%	90%	110%	103%	90%	110%	107%	80%	120%
Sulphate	7857463		35.4	35.4	0.0%	< 0.10	98%	90%	110%	100%	90%	110%	103%	80%	120%
Ortho Phosphate as P	7857463		<0.50	<0.50	NA	< 0.10	104%	90%	110%	96%	90%	110%	102%	80%	120%
Reactive Silica	7848788		18.3	18.3	0.0%	< 0.05	100%	90%	110%	102%	90%	110%	100%	80%	120%
Ammonia as N	7853203	7853203	<0.02	<0.02	NA	< 0.02	110%	90%	110%	101%	90%	110%	98%	80%	120%
Total Phosphorus	7853203	7853203	<0.05	<0.05	NA	< 0.05	99%	80%	120%	100%	90%	110%	98%	70%	130%
Total Organic Carbon	7853182	7853182	1.0	0.8	NA	< 0.5	100%	90%	110%	103%	90%	110%	98%	80%	120%
Colour	7853217		<5	<5	NA	< 5	100%	90%	110%	NA			NA		
Turbidity	7853172	7853172	1.7	1.5	NA	< 0.5	104%	90%	110%	NA			NA		
Calcium	7853398		49.8	53.8	7.7%	< 0.05	100%	90%	110%	97%	90%	110%	99%	70%	130%
Magnesium	7853398		8.04	8.68	7.7%	< 0.05	98%	90%	110%	95%	90%	110%	96%	70%	130%
Sodium	7853398		7.45	8.07	8.0%	< 0.05	94%	90%	110%	92%	90%	110%	95%	70%	130%
Potassium	7853398		3.17	3.42	7.6%	< 0.05	99%	90%	110%	96%	90%	110%	97%	70%	130%
Aluminum	7853172	7853172	0.010	0.010	NA	< 0.004	101%	90%	110%	102%	90%	110%	97%	70%	130%
Antimony	7853172	7853172	<0.003	<0.003	NA	< 0.003	98%	90%	110%	91%	90%	110%	92%	70%	130%
Arsenic	7853172	7853172	<0.003	<0.003	NA	< 0.003	104%	90%	110%	99%	90%	110%	100%	70%	130%
Barium	7853172	7853172	0.112	0.110	1.8%	< 0.002	105%	90%	110%	100%	90%	110%	98%	70%	130%
Beryllium	7853172	7853172	<0.001	<0.001	NA	< 0.001	99%	90%	110%	100%	90%	110%	112%	70%	130%
Boron	7853172	7853172	<0.010	<0.010	NA	< 0.010	98%	90%	110%	97%	90%	110%	97%	70%	130%
Cadmium	7853172	7853172	<0.001	<0.001	NA	< 0.001	100%	90%	110%	97%	90%	110%	95%	70%	130%
Chromium	7853172	7853172	<0.003	<0.003	NA	< 0.003	102%	90%	110%	101%	90%	110%	101%	70%	130%
Cobalt	7853172	7853172	<0.001	<0.001	NA	< 0.001	102%	90%	110%	98%	90%	110%	98%	70%	130%
Copper	7853172	7853172	<0.003	<0.003	NA	< 0.003	105%	90%	110%	104%	90%	110%	102%	70%	130%
Iron	7853172	7853172	<0.010	<0.010	NA	< 0.010	107%	90%	110%	97%	90%	110%	94%	70%	130%
Lead	7853172	7853172	<0.002	<0.002	NA	< 0.002	100%	90%	110%	96%	90%	110%	95%	70%	130%
Manganese	7853172	7853172	<0.002	<0.002	NA	< 0.002	105%	90%	110%	99%	90%	110%	101%	70%	130%
Mercury	7853172	7853172	<0.0001	<0.0001	NA	< 0.0001	104%	90%	110%	101%	90%	110%	103%	80%	120%
Molybdenum	7853172	7853172	<0.002	<0.002	NA	< 0.002	98%	90%	110%	94%	90%	110%	98%	70%	130%

AGAT Laboratories is accredited to ISO/IEC 17025 by the Canadian Association for Laboratory Accreditation Inc. (CALA) and/or Standards Council of Canada (SCC) for specific tests listed on the scope of accreditation. AGAT Laboratories (Mississauga) is also accredited by the Canadian Association for Laboratory Accreditation Inc. (CALA) for specific drinking water tests. Accreditations are location and parameter specific. A complete listing of parameters for each location is available from www.cala.ca and/or www.scc.ca. The tests in this report may not necessarily be included in the scope of accreditation.

Results relate only to the items tested and to all the items tested

TOWN OF CALEDON
PLANNING
RECEIVED
Jul 12, 2021

AGAT Laboratories
5835 COOPERS AVENUE
MISSISSAUGA, ONTARIO
CANADA L4Z 1Y2
TEL (905)712-5100
FAX (905)712-5122
http://www.agatlabs.com

Quality Assurance

CLIENT NAME: R.J. BURNSIDE & ASSOCIATES LTD
AGAT WORK ORDER: 16W138240
PROJECT: 300033273
ATTENTION TO: Dwight Smikle
SAMPLING SITE:
SAMPLED BY:

Water Analysis (Continued)

RPT Date: Sep 26, 2016			DUPLICATE				REFERENCE MATERIAL			METHOD BLANK SPIKE			MATRIX SPIKE		
PARAMETER	Batch	Sample Id	Dup #1	Dup #2	RPD	Method Blank	Measured Value	Acceptable Limits		Recovery	Acceptable Limits		Recovery	Acceptable Limits	
								Lower	Upper		Lower	Upper		Lower	Upper
Nickel	7853172	7853172	<0.003	<0.003	NA	< 0.003	103%	90%	110%	100%	90%	110%	98%	70%	130%
Selenium	7853172	7853172	<0.004	<0.004	NA	< 0.004	96%	90%	110%	96%	90%	110%	100%	70%	130%
Silver	7853172	7853172	<0.002	<0.002	NA	< 0.002	102%	90%	110%	104%	90%	110%	107%	70%	130%
Strontium	7853172	7853172	0.155	0.153	1.3%	< 0.005	105%	90%	110%	97%	90%	110%	98%	70%	130%
Thallium	7853172	7853172	<0.006	<0.006	NA	< 0.006	105%	90%	110%	104%	90%	110%	101%	70%	130%
Tin	7853172	7853172	<0.002	<0.002	NA	< 0.002	95%	90%	110%	97%	90%	110%	97%	70%	130%
Titanium	7853172	7853172	<0.002	<0.002	NA	< 0.002	97%	90%	110%	94%	90%	110%	94%	70%	130%
Tungsten	7853172	7853172	<0.010	<0.010	NA	< 0.010	98%	90%	110%	101%	90%	110%	100%	70%	130%
Uranium	7853172	7853172	<0.002	<0.002	NA	< 0.002	100%	90%	110%	99%	90%	110%	97%	70%	130%
Vanadium	7853172	7853172	<0.002	<0.002	NA	< 0.002	96%	90%	110%	94%	90%	110%	95%	70%	130%
Zinc	7853172	7853172	0.016	0.016	NA	< 0.005	104%	90%	110%	102%	90%	110%	103%	70%	130%
Zirconium	7853172	7853172	<0.004	<0.004	NA	< 0.004	96%	90%	110%	89%	90%	110%	86%	70%	130%

Comments: NA signifies Not Applicable.
Duplicate Qualifier: As the measured result approaches the RL, the uncertainty associated with the value increases dramatically, thus duplicate acceptance limits apply only where the average of the two duplicates is greater than five times the RL.
QA Qualifier for Zirconium : In a multi-element scan up to 10% of analytes may exceed the quoted limits for lab control standards and matrix spike by up to 10% absolute and the spike is deemed acceptable.

Certified By: Sofiya Pehlyova

AGAT Laboratories is accredited to ISO/IEC 17025 by the Canadian Association for Laboratory Accreditation Inc. (CALA) and/or Standards Council of Canada (SCC) for specific tests listed on the scope of accreditation. AGAT Laboratories (Mississauga) is also accredited by the Canadian Association for Laboratory Accreditation Inc. (CALA) for specific drinking water tests. Accreditations are location and parameter specific. A complete listing of parameters for each location is available from www.cala.ca and/or www.scc.ca. The tests in this report may not necessarily be included in the scope of accreditation.

Results relate only to the items tested and to all the items tested

TOWN OF CALEDON
PLANNING
RECEIVED
Jul 12, 2021

AGAT Laboratories

5835 COOPERS AVENUE
MISSISSAUGA, ONTARIO
CANADA L4Z 1Y2
TEL (905)712-5100
FAX (905)712-5122
http://www.agatlabs.com

QA Violation

CLIENT NAME: R.J. BURNSIDE & ASSOCIATES LTD

AGAT WORK ORDER: 16W138240

PROJECT: 300033273

ATTENTION TO: Dwight Smikle

RPT Date: Sep 26, 2016

PARAMETER	Sample Id	Sample Description	REFERENCE MATERIAL			METHOD BLANK SPIKE			MATRIX SPIKE		
			Measured Value	Acceptable Limits		Recovery	Acceptable Limits		Recovery	Acceptable Limits	
				Lower	Upper		Lower	Upper		Lower	Upper
Water Quality Assessment											
Zirconium	7853172	TW5	96%	90%	110%	89%	90%	110%	86%	70%	130%

Comments: NA signifies Not Applicable.
Duplicate Qualifier: As the measured result approaches the RL, the uncertainty associated with the value increases dramatically, thus duplicate acceptance limits apply only where the average of the two duplicates is greater than five times the RL.
QA Qualifier for Zirconium : In a multi-element scan up to 10% of analytes may exceed the quoted limits for lab control standards and matrix spike by up to 10% absolute and the spike is deemed acceptable.

AGAT Laboratories is accredited to ISO/IEC 17025 by the Canadian Association for Laboratory Accreditation Inc. (CALA) and/or Standards Council of Canada (SCC) for specific tests listed on the scope of accreditation. AGAT Laboratories (Mississauga) is also accredited by the Canadian Association for Laboratory Accreditation Inc. (CALA) for specific drinking water tests. Accreditations are location and parameter specific. A complete listing of parameters for each location is available from www.cala.ca and/or www.scc.ca. The tests in this report may not necessarily be included in the scope of accreditation.

Results relate only to the items tested and to all the items tested

TOWN OF CALEDON
PLANNING
RECEIVED
Jul 12, 2021

AGAT Laboratories
5835 COOPERS AVENUE
MISSISSAUGA, ONTARIO
CANADA L4Z 1Y2
TEL (905)712-5100
FAX (905)712-5122
http://www.agatlabs.com

Method Summary

CLIENT NAME: R.J. BURNSIDE & ASSOCIATES LTD

AGAT WORK ORDER: 16W138240

PROJECT: 300033273

ATTENTION TO: Dwight Smikle

SAMPLING SITE:

SAMPLED BY:

PARAMETER	AGAT S.O.P	LITERATURE REFERENCE	ANALYTICAL TECHNIQUE
Water Analysis			
Electrical Conductivity	INOR-93-6000	SM 2510 B	PC TITRATE
pH	INOR-93-6000	SM 4500-H+ B	PC TITRATE
Saturation pH		SM 2320 B	CALCULATION
Langelier Index		SM 2330B	CALCULATION
Total Hardness (as CaCO3)	MET-93-6105	EPA SW-846 6010C & 200.7	ICP/OES
Total Dissolved Solids	INOR-93-6028	SM 2540 C	BALANCE
Alkalinity (as CaCO3)	INOR-93-6000	SM 2320 B	PC TITRATE
Bicarbonate (as CaCO3)	INOR-93-6000	SM 2320 B	PC TITRATE
Carbonate (as CaCO3)	INOR-93-6000	SM 2320 B	PC TITRATE
Hydroxide (as CaCO3)	INOR-93-6000	SM 2320 B	PC TITRATE
Fluoride	INOR-93-6004	SM 4110 B	ION CHROMATOGRAPH
Chloride	INOR-93-6004	SM 4110 B	ION CHROMATOGRAPH
Nitrate as N	INOR-93-6004	SM 4110 B	ION CHROMATOGRAPH
Nitrite as N	INOR-93-6004	SM 4110 B	ION CHROMATOGRAPH
Bromide	INOR-93-6004	SM 4110 B	ION CHROMATOGRAPH
Sulphate	INOR-93-6004	SM 4110 B	ION CHROMATOGRAPH
Ortho Phosphate as P	INOR-93-6004	SM 4110 B	ION CHROMATOGRAPH
Reactive Silica	INOR-93-6047	AQ2 EPA-122A & SM 4500 SiO2 D	AQ2 DISCRETE ANALYSER
Ammonia as N	INOR-93-6059	QuikChem 10-107-06-1-J & SM 4500 NH3-F	LACHAT FIA
Total Phosphorus	INOR-93-6057	QuikChem 10-115-01-3-A & SM 4500-P I	LACHAT FIA
Total Organic Carbon	INOR-93-6049	EPA 415.1 & SM 5310	SHIMADZU CARBON ANALYZER
Colour	INOR-93-6046	SM 2120 B	SPECTROPHOTOMETER
Turbidity	INOR-93-6044	SM 2130 B	NEPHELOMETER
Calcium	MET-93-6105	EPA SW-846 6010C & 200.7	ICP/OES
Magnesium	MET-93-6105	EPA SW-846 6010C & 200.7	ICP/OES
Sodium	MET-93-6105	EPA SW-846 6010C & 200.7	ICP/OES
Potassium	MET-93-6105	EPA SW-846 6010C & 200.7	ICP/OES
Aluminum	MET-93-6103	EPA SW-846 6020A & 200.8	ICP-MS
Antimony	MET-93-6103	EPA SW-846 6020A & 200.8	ICP-MS
Arsenic	MET-93-6103	EPA SW-846 6020A & 200.8	ICP-MS
Barium	MET-93-6103	EPA SW-846 6020A & 200.8	ICP-MS
Beryllium	MET-93-6103	EPA SW-846 6020A & 200.8	ICP-MS
Boron	MET-93-6103	EPA SW-846 6020A & 200.8	ICP-MS
Cadmium	MET-93-6103	EPA SW-846 6020A & 200.8	ICP-MS
Chromium	MET-93-6103	EPA SW-846 6020A & 200.8	ICP-MS
Cobalt	MET-93-6103	EPA SW-846 6020A & 200.8	ICP-MS
Copper	MET-93-6103	EPA SW-846 6020A & 200.8	ICP-MS
Iron	MET-93-6103	EPA SW-846 6020A & 200.8	ICP-MS
Lead	MET-93-6103	EPA SW-846 6020A & 200.8	ICP-MS
Manganese	MET-93-6103	EPA SW-846 6020A & 200.8	ICP-MS
Mercury	MET-93-6100	EPA SW 846 7470 & 245.1	CVAAS
Molybdenum	MET-93-6103	EPA SW-846 6020A & 200.8	ICP-MS
Nickel	MET-93-6103	EPA SW-846 6020A & 200.8	ICP-MS
Selenium	MET-93-6103	EPA SW-846 6020A & 200.8	ICP-MS
Silver	MET-93-6103	EPA SW-846 6020A & 200.8	ICP-MS
Strontium	MET-93-6103	EPA SW-846 6020A & 200.8	ICP-MS
Thallium	MET-93-6103	EPA SW-846 6020A & 200.8	ICP-MS

Results relate only to the items tested and to all the items tested

TOWN OF CALEDON
PLANNING
RECEIVED
Jul 12, 2021

AGAT Laboratories

5835 COOPERS AVENUE
MISSISSAUGA, ONTARIO
CANADA L4Z 1Y2
TEL (905)712-5100
FAX (905)712-5122
http://www.agatlabs.com

Method Summary

CLIENT NAME: R.J. BURNSIDE & ASSOCIATES LTD

AGAT WORK ORDER: 16W138240

PROJECT: 300033273

ATTENTION TO: Dwight Smikle

SAMPLING SITE:

SAMPLED BY:

PARAMETER	AGAT S.O.P	LITERATURE REFERENCE	ANALYTICAL TECHNIQUE
Tin	MET-93-6103	EPA SW-846 6020A & 200.8	ICP-MS
Titanium	MET-93-6103	EPA SW-846 6020A & 200.8	ICP-MS
Tungsten	MET-93-6103	EPA SW-846 6020A & 200.8	ICP-MS
Uranium	MET-93-6103	EPA SW-846 6020A & 200.8	ICP-MS
Vanadium	MET-93-6103	EPA SW-846 6020A & 200.8	ICP-MS
Zinc	MET-93-6103	EPA SW-846 6020A & 200.8	ICP-MS
Zirconium	MET-93-6103	EPA SW-846 6020A & 200.8	ICP-MS
% Difference/ Ion Balance		SM 1030 E	CALCULATION

Results relate only to the items tested and to all the items tested

AGAT Laboratories
5835 Coopers Avenue
Mississauga, Ontario L4Z 1Y2
Ph: 905.712.5100 Fax: 905.712.5122
webearth.agatlabs.com

Chain of Custody Record

If this is a Drinking Water sample, please use Drinking Water Chain of Custody Form (potable water intended for human consumption)

Report Information:

Company: RJ Burnside + Associates Ltd.
Contact: Dwight Smikle
Address: 292 Speedvale Ave. West
Guelph, ONT
Phone: 519-823-4995 Fax:
Reports to be sent to:
1. Email: D.Smikle@rjburnside.com
2. Email:

Project Information:

Project: ~~Bellfountain~~ 300033273
Site Location: Bellfountain
Sampled By: Matt V. Sean Q.
AGAT Quote #: PO:
Please note: If quotation number is not provided, client will be billed full price for analysis.

Invoice Information:

Bill To Same: Yes ☒ No ☐
Company:
Contact:
Address:
Email:

Regulatory Requirements:

(Please check all applicable boxes)

☒ ~~No Regulatory Requirement~~

☐ Regulation 153/04
Table ____ (Indicate One)
☐ Ind/Com
☐ Res/Park
☐ Agriculture
Soil Texture (Check One)
☐ Coarse
☐ Fine

☐ Sewer Use
☐ Sanitary
☐ Storm
Region ____ (Indicate One)

☐ Regulation 558
☐ CCME
☐ Prov. Water Quality Objectives (PWQO)
☐ Other
____ (Indicate One)

Is this submission for a Record of Site Condition? ☐ Yes ☒ No

Report Guideline on Certificate of Analysis ☒ Yes ☐ No

Laboratory Use Only

Work Order #: 16W138240
Cooler Quantity:
Arrival Temperatures: 3.7 | 3.3 | 2.9
C 2.6 | 2.0 | 3.4
Custody Seal Intact: ☐ Yes ☐ No ☐ ~~N/A~~
Notes: on ice

Turnaround Time (TAT) Required:

Regular TAT ☒ 5 to 7 Business Days
Rush TAT (Rush Surcharges Apply)
☐ 3 Business Days ☐ 2 Business Days ☐ 1 Business Day
OR Date Required (Rush Surcharges May Apply):
Please provide prior notification for rush TAT
*TAT is exclusive of weekends and statutory holidays

Sample Matrix Legend

B	Biota
GW	Ground Water
O	Oil
P	Paint
S	Soil
SD	Sediment
SW	Surface Water

Sample Identification	Date Sampled	Time Sampled	# of Containers	Sample Matrix	Comments/ Special Instructions	Field Filtered (Please Circle) Metals / Hg / CrVI	Y/N	Metals and Inorganics	Metal Scan	Hydride Forming Metals	Client Custom Metals	ORPs: ☐ B-HWS ☐ Cl ☐ CN ☐ Cr⁶⁺ ☐ EC ☐ FOC ☐ NO_3/NO_2 ☐ Total N ☐ Hg ☐ pH ☐ SAR	Nutrients: ☐ TP ☐ NH_3 ☐ TKN ☐ NO_3 ☐ NO_2 ☐ NO_3/NO_2	Volatiles: ☐ VOC ☐ BTEX ☐ THM	CCME Fractions 1 to 4	ABNs	PAHs	Chlorophenols	PCBs	Organochlorine Pesticides	TCLP Metals/Inorganics	Sewer Use	WQA
TW5	Sept. 15, 2016	8:30	6	GW	* Metals + Mercury BOTH Field Filtered		Y															X
TW2	↓	12:30	↓	↓			Y															X
TW7		9:15					Y															X
TW8		10:00					Y															X
TW9		11:00					Y															X
TW11		11:45					Y															X

Samples Relinquished By (Print Name and Sign):	Date	Time	Samples Received By (Print Name and Sign):	Date	Time
Matt Valeriote / Matt Valeriote	Sept. 15, 2016		M. Venne M. Venne	2016/09/15	4:30pm
			Shaumin Sept 17/16	9:40am	

Page 1 of 1

№: T 034695

Pink Copy - Client | Yellow Copy - AGAT | White Copy- AGAT

Date Issued Feb 18, 2016

Document ID:Div-78-1511.011

TOWN OF CALEDON
PLANNING
RECEIVED
Jul 2, 2021

TOWN OF CALEDON
PLANNING
RECEIVED
Jul 12, 2021

AGAT Laboratories

5835 COOPERS AVENUE
MISSISSAUGA, ONTARIO
CANADA L4Z 1Y2
TEL (905)712-5100
FAX (905)712-5122
http://www.agatlabs.com

CLIENT NAME: R.J. BURNSIDE & ASSOCIATES LTD
292 Speedvale Avenue West, Unit 7
Guelph, ON N1H1C4
(519) 823-4995

ATTENTION TO: Matt Valeriote

PROJECT: 300033273

AGAT WORK ORDER: 16W170996

WATER ANALYSIS REVIEWED BY: Amanjot Bhela, Inorganic Coordinator

DATE REPORTED: Dec 15, 2016

PAGES (INCLUDING COVER): 5

VERSION*: 1

Should you require any information regarding this analysis please contact your client services representative at (905) 712-5100

*NOTES

All samples will be disposed of within 30 days following analysis. Please contact the lab if you require additional sample storage time.

Member of: Association of Professional Engineers and Geoscientists of Alberta (APEGA)
Western Enviro-Agricultural Laboratory Association (WEALA)
Environmental Services Association of Alberta (ESAA)

AGAT Laboratories is accredited to ISO/IEC 17025 by the Canadian Association for Laboratory Accreditation Inc. (CALA) and/or Standards Council of Canada (SCC) for specific tests listed on the scope of accreditation. AGAT Laboratories (Mississauga) is also accredited by the Canadian Association for Laboratory Accreditation Inc. (CALA) for specific drinking water tests. Accreditations are location and parameter specific. A complete listing of parameters for each location is available from www.cala.ca and/or www.scc.ca. The tests in this report may not necessarily be included in the scope of accreditation.

Results relate only to the items tested and to all the items tested
All reportable information as specified by ISO 17025:2005 is available from AGAT Laboratories upon request

TOWN OF CALEDON
PLANNING
RECEIVED

Jul 12, 2021

AGAT Laboratories

Certificate of Analysis

AGAT WORK ORDER: 16W170996

PROJECT: 300033273

5835 COOPERS AVENUE
MISSISSAUGA, ONTARIO
CANADA L4Z 1Y2
TEL (905)712-5100
FAX (905)712-5122
http://www.agatlabs.com

CLIENT NAME: R.J. BURNSIDE & ASSOCIATES LTD

ATTENTION TO: Matt Valeriote

SAMPLING SITE:

SAMPLED BY:

Nitrate (Water)

DATE RECEIVED: 2016-12-15

DATE REPORTED: 2016-12-15

SAMPLE DESCRIPTION:				TW2	TW7	TW9	TW5	TW8	TW11
SAMPLE TYPE:				Water	Water	Water	Water	Water	Water
DATE SAMPLED:				2016-12-13	2016-12-13	2016-12-13	2016-12-13	2016-12-13	2016-12-13
Parameter	Unit	G / S	RDL	8091589	8091592	8091593	8091594	8091595	8091596
Nitrate as N	mg/L		0.05	0.67	5.96	1.51	6.34	7.41	3.58

Comments: RDL - Reported Detection Limit; G / S - Guideline / Standard

Certified By: Amanjot Bhela

Results relate only to the items tested and to all the items tested

TOWN OF CALEDON
PLANNING
RECEIVED
Jul 12, 2021

AGAT Laboratories
5835 COOPERS AVENUE
MISSISSAUGA, ONTARIO
CANADA L4Z 1Y2
TEL (905)712-5100
FAX (905)712-5122
http://www.agatlabs.com

Quality Assurance

CLIENT NAME: R.J. BURNSIDE & ASSOCIATES LTD
AGAT WORK ORDER: 16W170996
PROJECT: 300033273
ATTENTION TO: Matt Valeriote
SAMPLING SITE:
SAMPLED BY:

Water Analysis

RPT Date: Dec 15, 2016			DUPLICATE				REFERENCE MATERIAL			METHOD BLANK SPIKE			MATRIX SPIKE		
PARAMETER	Batch	Sample Id	Dup #1	Dup #2	RPD	Method Blank	Measured Value	Acceptable Limits		Recovery	Acceptable Limits		Recovery	Acceptable Limits	
								Lower	Upper		Lower	Upper		Lower	Upper
Nitrate (Water)															
Nitrate as N	8086759		<0.05	<0.05	NA	< 0.05	93%	90%	110%	99%	90%	110%	97%	80%	120%

Comments: NA signifies Not Applicable.
Duplicate Qualifier: As the measured result approaches the RL, the uncertainty associated with the value increases dramatically, thus duplicate acceptance limits apply only where the average of the two duplicates is greater than five times the RL.

Certified By: Amanjot Bhela

AGAT Laboratories is accredited to ISO/IEC 17025 by the Canadian Association for Laboratory Accreditation Inc. (CALA) and/or Standards Council of Canada (SCC) for specific tests listed on the scope of accreditation. AGAT Laboratories (Mississauga) is also accredited by the Canadian Association for Laboratory Accreditation Inc. (CALA) for specific drinking water tests. Accreditations are location and parameter specific. A complete listing of parameters for each location is available from www.cala.ca and/or www.scc.ca. The tests in this report may not necessarily be included in the scope of accreditation.

Results relate only to the items tested and to all the items tested

TOWN OF CALEDON
PLANNING
RECEIVED
Jul 12, 2021

AGAT Laboratories

5835 COOPERS AVENUE
MISSISSAUGA, ONTARIO
CANADA L4Z 1Y2
TEL (905)712-5100
FAX (905)712-5122
http://www.agatlabs.com

Method Summary

CLIENT NAME: R.J. BURNSIDE & ASSOCIATES LTD

AGAT WORK ORDER: 16W170996

PROJECT: 300033273

ATTENTION TO: Matt Valeriote

SAMPLING SITE:

SAMPLED BY:

PARAMETER	AGAT S.O.P	LITERATURE REFERENCE	ANALYTICAL TECHNIQUE
Water Analysis			
Nitrate as N	INOR-93-6004	SM 4110 B	ION CHROMATOGRAPH

Results relate only to the items tested and to all the items tested

TOWN OF CALEDON
PLANNING
RECEIVED
Jul 12, 2021

AGAT Laboratories

5835 Coopers Avenue
Mississauga, Ontario L4Z 1Y2
Ph: 905.712.5100 Fax: 905.712.5122
webearth.agatlabs.com

15M

Chain of Custody Record

If this is a Drinking Water sample, please use Drinking Water Chain of Custody Form (potable water intended for human consumption)

Laboratory Use Only

Work Order #: 16W1709916

Cooler Quantity:

Arrival Temperatures: 1.9 | 1.9 | 0.2
6 | 5.9 | 5.7

Custody Seal Intact: ☐ Yes ☐ No ☐ N/A

Notes:

Report Information:

Company: BURNSIDE
Contact: Matt Valeriote
Address: 292 Speedvale Ave West Unit 20, Guelph
Phone: 823-4995 Fax:
Reports to be sent to:
1. Email: Matt.Valeriote@rjburnside.com
2. Email:

Regulatory Requirements:

☒ No Regulatory Requirement

(Please check all applicable boxes)

☐ Regulation 153/04
Table (Indicate One) ☐ Ind/Com ☐ Res/Park ☐ Agriculture
Soil Texture (Check One) ☐ Coarse ☐ Fine

☐ Sewer Use
☐ Sanitary ☐ Storm
Region (Indicate One)

☐ Regulation 558
☐ CCME
☐ Prov. Water Quality Objectives (PWQO)
☐ Other
(Indicate One)

Is this submission for a **Record of Site Condition?** ☐ Yes ☒ No

Report Guideline on *Certificate of Analysis* ☐ Yes ☒ No

Turnaround Time (TAT) Required:

Regular TAT ☒ 5 to 7 Business Days

Rush TAT (Rush Surcharges Apply)

☐ 3 Business Days ☐ 2 Business Days ☐ Next Business Day

OR Date Required (Rush Surcharges May Apply):

Please provide prior notification for rush TAT
**TAT is exclusive of weekends and statutory holidays*

For 'Same Day' analysis, please contact your AGAT CPM

Project Information:

Project: 300033273
Site Location: Belfountain
Sampled By: Matt Valeriote
AGAT Quote #: PO:
Please note: If quotation number is not provided, client will be billed full price for analysis.

Invoice Information:

Bill To Same: Yes ☒ No ☐

Company:
Contact:
Address:
Email:

Sample Matrix Legend

B	Biota
GW	Ground Water
O	Oil
P	Paint
S	Soil
SD	Sediment
SW	Surface Water

Sample Identification	Date Sampled	Time Sampled	# of Containers	Sample Matrix	Comments/ Special Instructions	Field Filtered - Metals, Hg, CrVI (Y/N)	O. Reg 153: Metals and Inorganics (☐ All Metals ☐ 153 Metals (excl. Hydrides) ☐ Hydride Metals)	O. Reg 153: ORPs (☐ B-HWS ☐ Cl⁻ ☐ CN ☐ Cr^{6+} ☐ EC ☐ FOC ☐ Hg ☐ pH ☐ SAR)	Full Metals Scan	Regulation/Custom Metals	Nutrients (☐ TP ☐ NH_3 ☐ TKN ☐ NO_3 ☐ NO_2 ☐ NO_3+NO_2)	Volatiles (☐ VOC ☐ BTEX ☐ THM)	CCME Fractions 1 to 4	ABNs	PAHs	PCBs (☐ Total ☐ Aroclors)	Organochlorine Pesticides	TCLP (☐ M&I ☐ VOCs ☐ ABNs ☐ B(a)P ☐ PCBs)	Sewer Use
TW2	13 DEC16	11:34	1	GW							✓							
TW7		9:38									✓							
TW9		10:02									✓							
TW5		9:08									✓							
TW8		10:40									✓							
TW11		10:58									✓							

Samples Relinquished By (Print Name and Sign)	Date	Time	Samples Received By (Print Name and Sign)	Date	Time
Matt Valeriote	Dec. 14, 16	15:00		Dec 15	15:00 pm
Samples Relinquished By (Print Name and Sign):	Date	Time	Samples Received By (Print Name and Sign): Simon	Date 16/12/15	Time 8:56
Samples Relinquished By (Print Name and Sign):	Date	Time	Samples Received By (Print Name and Sign):	Date	Time

Page 1 of 1

Nº: T 042376

TOWN OF CALEDON
PLANNING
RECEIVED
Jul 12, 2021

AGAT Laboratories

5835 COOPERS AVENUE
MISSISSAUGA, ONTARIO
CANADA L4Z 1Y2
TEL (905)712-5100
FAX (905)712-5122
http://www.agatlabs.com

CLIENT NAME: R.J. BURNSIDE & ASSOCIATES LTD
292 Speedvale Avenue West, Unit 7
Guelph, ON N1H1C4
(519) 823-4995

ATTENTION TO: Dwight Smikle

PROJECT: 300033273

AGAT WORK ORDER: 17T211486

WATER ANALYSIS REVIEWED BY: Sofka Pehlyova, Senior Analyst

DATE REPORTED: May 05, 2017

PAGES (INCLUDING COVER): 6

VERSION*: 1

Should you require any information regarding this analysis please contact your client services representative at (905) 712-5100

*NOTES

All samples will be disposed of within 30 days following analysis. Please contact the lab if you require additional sample storage time.

Member of: Association of Professional Engineers and Geoscientists of Alberta (APEGA)
Western Enviro-Agricultural Laboratory Association (WEALA)
Environmental Services Association of Alberta (ESAA)

AGAT Laboratories is accredited to ISO/IEC 17025 by the Canadian Association for Laboratory Accreditation Inc. (CALA) and/or Standards Council of Canada (SCC) for specific tests listed on the scope of accreditation. AGAT Laboratories (Mississauga) is also accredited by the Canadian Association for Laboratory Accreditation Inc. (CALA) for specific drinking water tests. Accreditations are location and parameter specific. A complete listing of parameters for each location is available from www.cala.ca and/or www.scc.ca. The tests in this report may not necessarily be included in the scope of accreditation.

Results relate only to the items tested and to all the items tested
All reportable information as specified by ISO 17025:2005 is available from AGAT Laboratories upon request

TOWN OF CALEDON
PLANNING
RECEIVED

Jul 12, 2021

AGAT Laboratories

5835 COOPERS AVENUE
MISSISSAUGA, ONTARIO
CANADA L4Z 1Y2
TEL (905)712-5100
FAX (905)712-5122
http://www.agatlabs.com

Certificate of Analysis

AGAT WORK ORDER: 17T211486

PROJECT: 300033273

CLIENT NAME: R.J. BURNSIDE & ASSOCIATES LTD

ATTENTION TO: Dwight Smikle

SAMPLING SITE:

SAMPLED BY:

Nitrate/Nitrite (Water)

DATE RECEIVED: 2017-05-03

DATE REPORTED: 2017-05-05

		SAMPLE DESCRIPTION:		TW1	TW2	TW3	TW4	TW5		TW6
		SAMPLE TYPE:		Water	Water	Water	Water	Water		Water
		DATE SAMPLED:		2017-05-02	2017-05-02	2017-05-02	2017-05-02	2017-05-02		2017-05-02
Parameter	Unit	G / S	RDL	8358383	8358385	8358386	8358387	8358388	RDL	8358389
Nitrate as N	mg/L		0.05	<0.05	1.90	0.58	3.22	7.99	0.10	9.08
Nitrite as N	mg/L		0.05	<0.05	<0.05	<0.05	<0.05	<0.05	0.10	<0.10

		SAMPLE DESCRIPTION:		TW7	TW8	TW9	TW10	TW11		TW12
		SAMPLE TYPE:		Water	Water	Water	Water	Water		Water
		DATE SAMPLED:		2017-05-02	2017-05-02	2017-05-02	2017-05-02	2017-05-02		2017-05-02
Parameter	Unit	G / S	RDL	8358390	8358391	8358392	8358393	8358394	RDL	8358397
Nitrate as N	mg/L		0.05	6.87	5.15	3.02	0.85	3.00	0.10	<0.10
Nitrite as N	mg/L		0.05	<0.05	<0.05	<0.05	<0.05	<0.05	0.10	<0.10

Comments: RDL - Reported Detection Limit; G / S - Guideline / Standard

8358389 Elevated RDLs indicate the degree of sample dilutions prior to analyses to keep analytes within the calibration range, reduce matrix interference and to avoid contaminating the instrument.

8358397 Elevated RDLs indicate the degree of sample dilutions prior to analyses to keep analytes within the calibration range, reduce matrix interference and to avoid contaminating the instrument.

Certified By: Sofiza Pehlyova

Results relate only to the items tested and to all the items tested

TOWN OF CALEDON
PLANNING
RECEIVED
Jul 12, 2021

AGAT Laboratories
5835 COOPERS AVENUE
MISSISSAUGA, ONTARIO
CANADA L4Z 1Y2
TEL (905)712-5100
FAX (905)712-5122
http://www.agatlabs.com

Quality Assurance

CLIENT NAME: R.J. BURNSIDE & ASSOCIATES LTD
AGAT WORK ORDER: 17T211486
PROJECT: 300033273
ATTENTION TO: Dwight Smikle
SAMPLING SITE:
SAMPLED BY:

Water Analysis

RPT Date: May 05, 2017

PARAMETER	Batch	Sample Id	DUPLICATE			Method Blank	REFERENCE MATERIAL			METHOD BLANK SPIKE			MATRIX SPIKE		
			Dup #1	Dup #2	RPD		Measured Value	Acceptable Limits		Recovery	Acceptable Limits		Recovery	Acceptable Limits	
								Lower	Upper		Lower	Upper		Lower	Upper
Nitrate/Nitrite (Water)															
Nitrate as N	8358389	8358389	9.08	9.02	0.7%	< 0.05	102%	90%	110%	107%	90%	110%	114%	80%	120%
Nitrite as N	8358389	8358389	<0.10	<0.10	NA	< 0.05	NA	90%	110%	103%	90%	110%	102%	80%	120%

Comments: NA signifies Not Applicable.
Duplicate Qualifier: As the measured result approaches the RL, the uncertainty associated with the value increases dramatically, thus duplicate acceptance limits apply only where the average of the two duplicates is greater than five times the RL.

Certified By: Sofiya Pehlyova

AGAT Laboratories is accredited to ISO/IEC 17025 by the Canadian Association for Laboratory Accreditation Inc. (CALA) and/or Standards Council of Canada (SCC) for specific tests listed on the scope of accreditation. AGAT Laboratories (Mississauga) is also accredited by the Canadian Association for Laboratory Accreditation Inc. (CALA) for specific drinking water tests. Accreditations are location and parameter specific. A complete listing of parameters for each location is available from www.cala.ca and/or www.scc.ca. The tests in this report may not necessarily be included in the scope of accreditation.

Results relate only to the items tested and to all the items tested

TOWN OF CALEDON
PLANNING
RECEIVED
Jul 12, 2021

AGAT Laboratories

5835 COOPERS AVENUE
MISSISSAUGA, ONTARIO
CANADA L4Z 1Y2
TEL (905)712-5100
FAX (905)712-5122
http://www.agatlabs.com

Method Summary

CLIENT NAME: R.J. BURNSIDE & ASSOCIATES LTD

AGAT WORK ORDER: 17T211486

PROJECT: 300033273

ATTENTION TO: Dwight Smikle

SAMPLING SITE:

SAMPLED BY:

PARAMETER	AGAT S.O.P	LITERATURE REFERENCE	ANALYTICAL TECHNIQUE
Water Analysis			
Nitrate as N	INOR-93-6004	SM 4110 B	ION CHROMATOGRAPH
Nitrite as N	INOR-93-6004	SM 4110 B	ION CHROMATOGRAPH

Results relate only to the items tested and to all the items tested

TOWN OF CALEDON
PLANNING
RECEIVED
Jul 12, 2021

AGAT Laboratories

5835 Coopers Avenue
Mississauga, Ontario L4Z 1Y2
Ph: 905.712.5100 Fax: 905.712.5122
webearth.agatlabs.com

Chain of Custody Record

If this is a Drinking Water sample, please use Drinking Water Chain of Custody Form (potable water consumed by humans)

Laboratory Use Only
Work Order #: 17T 211486
Cooler Quantity:
Arrival Temperatures: 7.2 | 7.4 | 4.5
Custody Seal Intact: ☐Yes ☐No ☐N/A
Notes:

Report Information:
Company: RJ Burnside + Associates Ltd.
Contact: Dwight Smikle
Address: 292 Speedvale Ave. W, Unit #20
Guelph ON, N1H 1C4
Phone: Fax:
Reports to be sent to:
1. Email: dwight.smikle@rjburnside.com
2. Email:

Project Information:
Project: ~~Bel Fountain~~ 300033273
Site Location: Bel Fountain, ON
Sampled By: Matt Valeriote
AGAT Quote #: PO:
Please note: If quotation number is not provided, client will be billed full price for analysis.

Invoice Information:
Bill To Same: Yes ☒ No ☐
Company:
Contact:
Address:
Email:

Regulatory Requirements:
☐ No Regulatory Requirement
(Please check all applicable boxes)

☐ Regulation 153/04
Table (Indicate One) ☐ Ind/Com ☐ Res/Park ☐ Agriculture
Soil Texture (Check One) ☐ Coarse ☐ Fine

☐ Sewer Use
☐ Sanitary ☐ Storm
Region (Indicate One) ☐ MISA

☐ Regulation 558
☐ CCME
☐ Prov. Water Quality Objectives (PWQO)
☐ Other
(Indicate One)

Is this submission for a **Record of Site Condition?** ☐ Yes ☐ No

Report Guideline on *Certificate of Analysis* ☐ Yes ☐ No

Turnaround Time (TAT) Required:
Regular TAT ☐ 5 to 7 Business Days
Rush TAT (Rush Surcharges Apply)
☐ 3 Business Days ☐ 2 Business Days ☒ Next Business Day
OR Date Required (Rush Surcharges May Apply):
Please provide prior notification for rush TAT
**TAT is exclusive of weekends and statutory holidays*
For 'Same Day' analysis, please contact your AGAT CPM

Sample Matrix Legend
B Biota
GW Ground Water
O Oil
P Paint
S Soil
SD Sediment
SW Surface Water

Sample Identification	Date Sampled	Time Sampled	# of Containers	Sample Matrix	Comments/ Special Instructions	Field Filtered - Metals, Hg, CrVI (Y/N)	O. Reg 153: Metals and Inorganics (☐ All Metals ☐ 153 Metals (excl. Hydrides) ☐ Hydride Metals ☐ 153 Metals (Incl. Hydrides))	ORPs: ☐ B-HWS ☐ Cl⁻ ☐ CN⁻ ☐ Cr^{6+} ☐ EC ☐ FOC ☐ Hg ☐ pH ☐ SAR	Full Metals Scan	Regulation/Custom Metals	Nutrients: ☐ TP ☐ NH_3 ☐ TKN ☐ NO_3 ☐ NO_2 ☐ NO_3+NO_2	Volatiles: ☐ VOC ☐ BTEX ☐ THM	CCME Fractions 1 to 4	ABNs	PAHs	PCBs: ☐ Total ☐ Aroclors	Organochlorine Pesticides	TCLP: ☐ M&I ☐ VOCs ☐ ABNs ☐ B(a)P ☐ PCBs	Sewer Use	Nitrate + Nitrite
TW1	May 2, 2017	10:00	1	GW																X
TW2		10:30																		X
TW3		11:00																		X
TW4		11:30																		X
TW5		12:00																		X
TW6		12:30																		X
TW7		13:00																		X
TW8		13:30																		X
TW9		14:00																		X
TW10		14:30																		X
TW11		15:00																		X

Samples Relinquished By (Print Name and Sign)	Date	Time	Samples Received By (Print Name and Sign)	Date	Time
Matt Valeriote	May 2, 2017	16:30			
	2017/05/03	4:40		2017/05/03	12:15

Page 1 of 2
N°: T 051085

TOWN OF CALEDON
PLANNING
RECEIVED
Jul 12, 2021

AGAT Laboratories
5835 Coopers Avenue
Mississauga, Ontario L4Z 1Y2
Ph: 905.712.5100 Fax: 905.712.5122
webearth.agatlabs.com

Chain of Custody Record

If this is a Drinking Water sample, please use Drinking Water Chain of Custody Form (potable water consumed by humans)

Report Information:

Company: RJ Burnside & Associates Ltd.
Contact: Dwight Smikle
Address: 292 Speedvale Ave. W. Unit #20
Guelph ON. N1H 1C4
Phone: Fax:
Reports to be sent to:
1. Email: dwight.smikle@rjburnside.com
2. Email:

Project Information:

Project: ~~Bellfountain~~ 3000 33273
Site Location: Bellfountain
Sampled By: Matt Valeriote
AGAT Quote #: PO:
Please note: If quotation number is not provided, client will be billed full price for analysis.

Invoice Information:

Bill To Same: Yes ☒ No ☐
Company:
Contact:
Address:
Email:

Regulatory Requirements:

☐ No Regulatory Requirement
(Please check all applicable boxes)

☐ Regulation 153/04
Table (Indicate One) ☐ Ind/Com ☐ Res/Park ☐ Agriculture
Soil Texture (Check One) ☐ Coarse ☐ Fine

☐ Sewer Use
☐ Sanitary ☐ Storm
Region (Indicate One)
☐ MISA

☐ Regulation 558
☐ CCME
☐ Prov. Water Quality Objectives (PWQO)
☐ Other
(Indicate One)

Is this submission for a Record of Site Condition? ☐ Yes ☐ No

Report Guideline on Certificate of Analysis ☐ Yes ☐ No

Sample Matrix Legend

B	Biota
GW	Ground Water
O	Oil
P	Paint
S	Soil
SD	Sediment
SW	Surface Water

Laboratory Use Only

Work Order #:
Cooler Quantity:
Arrival Temperatures: 4.2 | 4.3 | 4.5 / 3.2 | 3.3 | 3.5
Custody Seal Intact: ☐ Yes ☐ No ☐ N/A
Notes:

Turnaround Time (TAT) Required:

Regular TAT ☐ 5 to 7 Business Days
Rush TAT (Rush Surcharges Apply)
☐ 3 Business Days ☐ 2 Business Days ☒ Next Business Day
OR Date Required (Rush Surcharges May Apply):
Please provide prior notification for rush TAT
**TAT is exclusive of weekends and statutory holidays*
For 'Same Day' analysis, please contact your AGAT CPM

Sample Identification	Date Sampled	Time Sampled	# of Containers	Sample Matrix	Comments/ Special Instructions	Field Filtered - Metals, Hg, CrVI Y/N	O. Reg 153: Metals and Inorganics (All Metals ☐ 153 Metals (excl. Hydrides) ☐ Hydride Metals ☐ 153 Metals (Incl. Hydrides))	ORPs: ☐ B-HWS ☐ Cl⁻ ☐ CN⁻ ☐ Cr^{6+} ☐ EC ☐ FOC ☐ Hg ☐ pH ☐ SAR	Full Metals Scan	Regulation/Custom Metals	Nutrients: ☐ TP ☐ NH_3 ☐ TKN ☐ NO_3 ☐ NO_2 ☐ NO_3+NO_2	Volatiles: ☐ VOC ☐ BTEX ☐ THM	CCME Fractions 1 to 4	ABNs	PAHs	PCBs: ☐ Total ☐ Aroclors	Organochlorine Pesticides	TCLP: ☐ M&I ☐ VOCs ☐ ABNs ☐ B(a)P ☐ PCBs	Sewer Use	Nitrate & Nitrite
TW12	May 2, 2017	15:30	1	GW																X

Samples Relinquished By (Print Name and Sign)	Date	Time	Samples Received By (Print Name and Sign)	Date	Time
Matt Valeriote	May 2, 2017	16:30			
	2017/05/03	4:40		2017/05/03	12:15

Page 2 of 2
No: T 051086

TOWN OF CALEDON
PLANNING
RECEIVED
Jul 12, 2021

AGAT Laboratories

5835 COOPERS AVENUE
MISSISSAUGA, ONTARIO
CANADA L4Z 1Y2
TEL (905)712-5100
FAX (905)712-5122
http://www.agatlabs.com

CLIENT NAME: R.J. BURNSIDE & ASSOCIATES LTD
292 Speedvale Avenue West, Unit 7
Guelph, ON N1H1C4
(519) 823-4995

ATTENTION TO: Dwight Smikle

PROJECT: 300033273

AGAT WORK ORDER: 17W195195

WATER ANALYSIS REVIEWED BY: Mike Muneswar, BSc (Chem), Senior Inorganic Analyst

DATE REPORTED: Mar 22, 2017

PAGES (INCLUDING COVER): 11

VERSION*: 1

Should you require any information regarding this analysis please contact your client services representative at (905) 712-5100

*NOTES

All samples will be disposed of within 30 days following analysis. Please contact the lab if you require additional sample storage time.

Member of: Association of Professional Engineers and Geoscientists of Alberta (APEGA)
Western Enviro-Agricultural Laboratory Association (WEALA)
Environmental Services Association of Alberta (ESAA)

AGAT Laboratories is accredited to ISO/IEC 17025 by the Canadian Association for Laboratory Accreditation Inc. (CALA) and/or Standards Council of Canada (SCC) for specific tests listed on the scope of accreditation. AGAT Laboratories (Mississauga) is also accredited by the Canadian Association for Laboratory Accreditation Inc. (CALA) for specific drinking water tests. Accreditations are location and parameter specific. A complete listing of parameters for each location is available from www.cala.ca and/or www.scc.ca. The tests in this report may not necessarily be included in the scope of accreditation.

Results relate only to the items tested and to all the items tested
All reportable information as specified by ISO 17025:2005 is available from AGAT Laboratories upon request

TOWN OF CALEDON
PLANNING
RECEIVED
Jul 12, 2021

AGAT Laboratories

5835 COOPERS AVENUE
MISSISSAUGA, ONTARIO
CANADA L4Z 1Y2
TEL (905)712-5100
FAX (905)712-5122
http://www.agatlabs.com

Certificate of Analysis

AGAT WORK ORDER: 17W195195

PROJECT: 300033273

CLIENT NAME: R.J. BURNSIDE & ASSOCIATES LTD

ATTENTION TO: Dwight Smikle

SAMPLING SITE:

SAMPLED BY:

Water Quality Assessment - Groundwater Samples

DATE RECEIVED: 2017-03-10

DATE REPORTED: 2017-03-22

		SAMPLE DESCRIPTION:		TW1		TW2		TW3		TW4	TW5
		SAMPLE TYPE:		Water		Water		Water		Water	Water
		DATE SAMPLED:		2017-03-10		2017-03-10		2017-03-10		2017-03-10	2017-03-10
Parameter	Unit	G / S	RDL	8244996	RDL	8244997	RDL	8245003	RDL	8245009	8245015
Electrical Conductivity	uS/cm		2	705	2	392	2	802	2	558	604
pH	pH Units		NA	8.14	NA	8.02	NA	8.14	NA	8.10	8.12
Saturation pH				6.89		7.36		6.83		6.99	7.00
Langelier Index				1.25		0.66		1.31		1.11	1.12
Total Hardness (as CaCO3)	mg/L		0.5	361	0.5	181	0.5	433	0.5	275	288
Total Dissolved Solids	mg/L		20	396	20	198	20	484	20	284	306
Alkalinity (as CaCO3)	mg/L		5	256	5	163	5	248	5	250	249
Bicarbonate (as CaCO3)	mg/L		5	256	5	163	5	248	5	250	249
Carbonate (as CaCO3)	mg/L		5	<5	5	<5	5	<5	5	<5	<5
Hydroxide (as CaCO3)	mg/L		5	<5	5	<5	5	<5	5	<5	<5
Fluoride	mg/L		0.05	0.19	0.05	<0.05	0.05	0.10	0.05	<0.05	<0.05
Chloride	mg/L		0.10	14.3	0.10	16.7	0.10	3.41	0.10	12.6	20.2
Nitrate as N	mg/L		0.05	<0.05	0.05	1.16	0.05	0.62	0.05	3.43	6.76
Nitrite as N	mg/L		0.05	<0.05	0.05	<0.05	0.05	<0.05	0.05	<0.05	<0.05
Bromide	mg/L		0.05	<0.05	0.05	<0.05	0.05	<0.05	0.05	<0.05	<0.05
Sulphate	mg/L		0.50	105	0.10	13.8	0.50	193	0.10	18.9	14.1
Ortho Phosphate as P	mg/L		0.10	<0.10	0.10	<0.10	0.10	<0.10	0.10	<0.10	<0.10
Reactive Silica	mg/L		0.05	12.7	0.05	3.65	0.05	10.7	0.05	7.28	7.03
Ammonia as N	mg/L		0.02	<0.02	0.02	0.04	0.02	0.14	0.02	<0.02	<0.02
Total Phosphorus	mg/L		0.05	<0.05	0.05	<0.05	0.05	<0.05	0.05	<0.05	<0.05
Total Organic Carbon	mg/L		0.5	1.3	0.5	2.4	0.5	0.7	0.5	1.2	0.7
Colour	TCU		5	<5	5	<5	5	<5	5	<5	<5
Turbidity	NTU		0.5	135	0.5	3.3	0.5	15.3	0.5	0.6	1.9
Calcium	mg/L		0.05	97.9	0.05	48.8	0.05	122	0.05	74.1	79.3
Magnesium	mg/L		0.05	28.4	0.05	14.4	0.05	31.1	0.05	21.8	21.9
Sodium	mg/L		0.05	5.27	0.05	6.39	0.05	3.42	0.05	5.36	8.93
Potassium	mg/L		0.05	1.18	0.05	1.26	0.05	1.28	0.05	1.01	0.91
Aluminum	mg/L		0.004	0.006	0.004	0.017	0.004	0.008	0.004	0.011	0.013
Antimony	mg/L		0.003	<0.003	0.003	<0.003	0.003	<0.003	0.003	<0.003	<0.003
Arsenic	mg/L		0.003	0.006	0.003	<0.003	0.003	<0.003	0.003	<0.003	<0.003

Certified By:

Results relate only to the items tested and to all the items tested

TOWN OF CALEDON
PLANNING
RECEIVED

Jul 12, 2021

AGAT Laboratories

5835 COOPERS AVENUE
MISSISSAUGA, ONTARIO
CANADA L4Z 1Y2
TEL (905)712-5100
FAX (905)712-5122
http://www.agatlabs.com

Certificate of Analysis

AGAT WORK ORDER: 17W195195

PROJECT: 300033273

CLIENT NAME: R.J. BURNSIDE & ASSOCIATES LTD

ATTENTION TO: Dwight Smikle

SAMPLING SITE:

SAMPLED BY:

Water Quality Assessment - Groundwater Samples

DATE RECEIVED: 2017-03-10

DATE REPORTED: 2017-03-22

		SAMPLE DESCRIPTION:		TW1		TW2		TW3		TW4	TW5
		SAMPLE TYPE:		Water		Water		Water		Water	Water
		DATE SAMPLED:		2017-03-10		2017-03-10		2017-03-10		2017-03-10	2017-03-10
Parameter	Unit	G / S	RDL	8244996	RDL	8244997	RDL	8245003	RDL	8245009	8245015
Barium	mg/L		0.002	0.073	0.002	0.030	0.002	0.045	0.002	0.053	0.110
Beryllium	mg/L		0.001	<0.001	0.001	<0.001	0.001	<0.001	0.001	<0.001	<0.001
Boron	mg/L		0.010	0.016	0.010	<0.010	0.010	0.020	0.010	<0.010	<0.010
Cadmium	mg/L		0.001	<0.001	0.001	<0.001	0.001	<0.001	0.001	<0.001	<0.001
Chromium	mg/L		0.003	<0.003	0.003	<0.003	0.003	<0.003	0.003	<0.003	<0.003
Cobalt	mg/L		0.001	<0.001	0.001	<0.001	0.001	<0.001	0.001	<0.001	<0.001
Copper	mg/L		0.003	<0.003	0.003	<0.003	0.003	<0.003	0.003	<0.003	<0.003
Iron	mg/L		0.010	0.167	0.010	<0.010	0.010	0.032	0.010	<0.010	<0.010
Lead	mg/L		0.002	<0.002	0.002	<0.002	0.002	<0.002	0.002	<0.002	<0.002
Manganese	mg/L		0.002	0.019	0.002	<0.002	0.002	0.005	0.002	<0.002	<0.002
Mercury	mg/L		0.0001	<0.0001	0.0001	<0.0001	0.0001	<0.0001	0.0001	<0.0001	<0.0001
Molybdenum	mg/L		0.002	<0.002	0.002	<0.002	0.002	0.002	0.002	<0.002	<0.002
Nickel	mg/L		0.003	<0.003	0.003	<0.003	0.003	<0.003	0.003	<0.003	<0.003
Selenium	mg/L		0.004	<0.004	0.004	<0.004	0.004	<0.004	0.004	<0.004	<0.004
Silver	mg/L		0.002	<0.002	0.002	<0.002	0.002	<0.002	0.002	<0.002	<0.002
Strontium	mg/L		0.005	0.588	0.005	0.078	0.005	0.916	0.005	0.121	0.162
Thallium	mg/L		0.006	<0.006	0.006	<0.006	0.006	<0.006	0.006	<0.006	<0.006
Tin	mg/L		0.002	<0.002	0.002	<0.002	0.002	<0.002	0.002	<0.002	<0.002
Titanium	mg/L		0.002	<0.002	0.002	<0.002	0.002	0.003	0.002	<0.002	<0.002
Tungsten	mg/L		0.010	<0.010	0.010	<0.010	0.010	<0.010	0.010	<0.010	<0.010
Uranium	mg/L		0.002	<0.002	0.002	<0.002	0.002	<0.002	0.002	<0.002	<0.002
Vanadium	mg/L		0.002	<0.002	0.002	<0.002	0.002	<0.002	0.002	<0.002	<0.002
Zinc	mg/L		0.005	0.034	0.005	0.011	0.005	0.032	0.005	0.013	0.024
Zirconium	mg/L		0.004	<0.004	0.004	<0.004	0.004	<0.004	0.004	<0.004	<0.004
% Difference/ Ion Balance	%		NA	1.56	NA	2.09	NA	1.57	NA	2.07	1.24

Certified By:

Results relate only to the items tested and to all the items tested

TOWN OF CALEDON
PLANNING
RECEIVED

Jul 12, 2021

AGAT Laboratories

5835 COOPERS AVENUE
MISSISSAUGA, ONTARIO
CANADA L4Z 1Y2
TEL (905)712-5100
FAX (905)712-5122
http://www.agatlabs.com

Certificate of Analysis

AGAT WORK ORDER: 17W195195

PROJECT: 300033273

CLIENT NAME: R.J. BURNSIDE & ASSOCIATES LTD

ATTENTION TO: Dwight Smikle

SAMPLING SITE:

SAMPLED BY:

Water Quality Assessment - Groundwater Samples

DATE RECEIVED: 2017-03-10

DATE REPORTED: 2017-03-22

		SAMPLE DESCRIPTION:		TW6	TW7	TW8	TW9	TW10	TW11		TW12
		SAMPLE TYPE:		Water	Water	Water	Water	Water	Water		Water
		DATE SAMPLED:		2017-03-10	2017-03-10	2017-03-10	2017-03-10	2017-03-10	2017-03-10		2017-03-10
Parameter	Unit	G / S	RDL	8245021	8245027	8245033	8245039	8245045	8245052	RDL	8245058
Electrical Conductivity	uS/cm		2	612	592	604	620	430	568	2	1730
pH	pH Units		NA	8.10	8.11	8.12	8.10	8.06	8.16	NA	7.95
Saturation pH				7.01	6.98	6.98	6.90	7.26	6.99		6.61
Langelier Index				1.09	1.13	1.14	1.20	0.80	1.17		1.34
Total Hardness (as CaCO3)	mg/L		0.5	288	291	301	310	202	278	0.5	1020
Total Dissolved Solids	mg/L		20	308	306	312	326	216	286	20	1400
Alkalinity (as CaCO3)	mg/L		5	245	260	251	294	182	249	5	192
Bicarbonate (as CaCO3)	mg/L		5	245	260	251	294	182	249	5	192
Carbonate (as CaCO3)	mg/L		5	<5	<5	<5	<5	<5	<5	5	<5
Hydroxide (as CaCO3)	mg/L		5	<5	<5	<5	<5	<5	<5	5	<5
Fluoride	mg/L		0.05	<0.05	<0.05	<0.05	<0.05	<0.05	<0.05	0.25	<0.25
Chloride	mg/L		0.10	21.8	12.5	9.54	8.84	14.4	13.9	0.50	2.11
Nitrate as N	mg/L		0.05	8.52	5.77	6.68	2.68	1.68	3.94	0.25	<0.25
Nitrite as N	mg/L		0.05	<0.05	<0.05	<0.05	<0.05	<0.05	<0.05	0.25	<0.25
Bromide	mg/L		0.05	<0.05	<0.05	<0.05	<0.05	<0.05	<0.05	0.25	<0.25
Sulphate	mg/L		0.10	13.5	14.4	31.1	50.1	14.3	19.1	1.0	896
Ortho Phosphate as P	mg/L		0.10	<0.10	<0.10	<0.10	<0.10	<0.10	<0.10	0.50	<0.50
Reactive Silica	mg/L		0.05	7.01	6.72	7.18	8.42	4.56	7.19	0.05	13.1
Ammonia as N	mg/L		0.02	<0.02	0.03	0.15	0.09	0.03	<0.02	0.02	<0.02
Total Phosphorus	mg/L		0.05	<0.05	<0.05	0.08	<0.05	0.06	<0.05	0.05	<0.05
Total Organic Carbon	mg/L		0.5	0.7	0.6	1.1	0.8	2.1	1.6	0.5	0.6
Colour	TCU		5	<5	<5	<5	<5	<5	<5	5	<5
Turbidity	NTU		0.5	<0.5	1.8	113	2.0	64.8	7.4	0.5	8.6
Calcium	mg/L		0.05	79.9	80.0	81.6	81.5	54.3	75.0	0.10	318
Magnesium	mg/L		0.05	21.6	22.2	23.6	25.8	16.2	22.0	0.10	54.3
Sodium	mg/L		0.05	8.87	4.86	3.67	4.17	5.76	5.82	0.10	8.43
Potassium	mg/L		0.05	0.86	0.92	1.12	0.99	1.21	0.98	0.10	1.95
Aluminum	mg/L		0.004	0.006	0.009	<0.004	0.009	0.014	0.011	0.004	0.008
Antimony	mg/L		0.003	<0.003	<0.003	<0.003	<0.003	<0.003	<0.003	0.003	<0.003
Arsenic	mg/L		0.003	<0.003	<0.003	<0.003	<0.003	<0.003	<0.003	0.003	0.013

Certified By:

Results relate only to the items tested and to all the items tested

TOWN OF CALEDON
PLANNING
RECEIVED

Jul 12, 2021

AGAT Laboratories

Certificate of Analysis

AGAT WORK ORDER: 17W195195

PROJECT: 300033273

5835 COOPERS AVENUE
MISSISSAUGA, ONTARIO
CANADA L4Z 1Y2
TEL (905)712-5100
FAX (905)712-5122
http://www.agatlabs.com

CLIENT NAME: R.J. BURNSIDE & ASSOCIATES LTD

ATTENTION TO: Dwight Smikle

SAMPLING SITE:

SAMPLED BY:

Water Quality Assessment - Groundwater Samples

DATE RECEIVED: 2017-03-10

DATE REPORTED: 2017-03-22

		SAMPLE DESCRIPTION:		TW6	TW7	TW8	TW9	TW10	TW11		TW12
		SAMPLE TYPE:		Water	Water	Water	Water	Water	Water		Water
		DATE SAMPLED:		2017-03-10	2017-03-10	2017-03-10	2017-03-10	2017-03-10	2017-03-10		2017-03-10
Parameter	Unit	G / S	RDL	8245021	8245027	8245033	8245039	8245045	8245052	RDL	8245058
Barium	mg/L		0.002	0.105	0.109	0.099	0.074	0.036	0.061	0.002	0.012
Beryllium	mg/L		0.001	<0.001	<0.001	<0.001	<0.001	<0.001	<0.001	0.001	<0.001
Boron	mg/L		0.010	<0.010	0.010	0.011	0.012	<0.010	0.010	0.010	0.058
Cadmium	mg/L		0.001	<0.001	<0.001	<0.001	<0.001	<0.001	<0.001	0.001	<0.001
Chromium	mg/L		0.003	<0.003	<0.003	<0.003	<0.003	<0.003	<0.003	0.003	<0.003
Cobalt	mg/L		0.001	<0.001	<0.001	<0.001	<0.001	<0.001	<0.001	0.001	<0.001
Copper	mg/L		0.003	<0.003	<0.003	<0.003	<0.003	<0.003	<0.003	0.003	<0.003
Iron	mg/L		0.010	<0.010	<0.010	<0.010	<0.010	<0.010	<0.010	0.010	0.665
Lead	mg/L		0.002	<0.002	<0.002	<0.002	<0.002	<0.002	<0.002	0.002	<0.002
Manganese	mg/L		0.002	<0.002	<0.002	0.002	<0.002	0.009	<0.002	0.002	0.030
Mercury	mg/L		0.0001	<0.0001	<0.0001	<0.0001	<0.0001	<0.0001	<0.0001	0.0001	<0.0001
Molybdenum	mg/L		0.002	<0.002	<0.002	<0.002	<0.002	<0.002	<0.002	0.002	0.005
Nickel	mg/L		0.003	<0.003	<0.003	<0.003	<0.003	<0.003	<0.003	0.003	<0.003
Selenium	mg/L		0.004	<0.004	<0.004	<0.004	<0.004	<0.004	<0.004	0.004	<0.004
Silver	mg/L		0.002	<0.002	<0.002	<0.002	<0.002	<0.002	<0.002	0.002	<0.002
Strontium	mg/L		0.005	0.156	0.136	0.545	0.339	0.083	0.129	0.005	3.86
Thallium	mg/L		0.006	<0.006	<0.006	<0.006	<0.006	<0.006	<0.006	0.006	<0.006
Tin	mg/L		0.002	<0.002	<0.002	<0.002	<0.002	<0.002	<0.002	0.002	<0.002
Titanium	mg/L		0.002	<0.002	<0.002	<0.002	<0.002	<0.002	<0.002	0.002	0.013
Tungsten	mg/L		0.010	<0.010	<0.010	<0.010	<0.010	<0.010	<0.010	0.010	<0.010
Uranium	mg/L		0.002	<0.002	<0.002	<0.002	<0.002	<0.002	<0.002	0.002	<0.002
Vanadium	mg/L		0.002	<0.002	<0.002	<0.002	<0.002	<0.002	<0.002	0.002	<0.002
Zinc	mg/L		0.005	0.017	0.029	0.017	0.037	0.016	0.015	0.005	0.046
Zirconium	mg/L		0.004	<0.004	<0.004	<0.004	<0.004	<0.004	<0.004	0.004	<0.004
% Difference/ Ion Balance	%		NA	1.84	1.69	1.59	6.98	1.56	1.85	NA	4.11

Comments: RDL - Reported Detection Limit; G / S - Guideline / Standard

8244996-8245058 Elevated RDLs indicate the degree of sample dilutions prior to analysis in order to keep the analytes within the calibration range of the instruments and to reduce matrix interferences.

Certified By:

Results relate only to the items tested and to all the items tested

TOWN OF CALEDON
PLANNING
RECEIVED
Jul 12, 2021

AGAT Laboratories

5835 COOPERS AVENUE
MISSISSAUGA, ONTARIO
CANADA L4Z 1Y2
TEL (905)712-5100
FAX (905)712-5122
http://www.agatlabs.com

Quality Assurance

CLIENT NAME: R.J. BURNSIDE & ASSOCIATES LTD

AGAT WORK ORDER: 17W195195

PROJECT: 300033273

ATTENTION TO: Dwight Smikle

SAMPLING SITE:

SAMPLED BY:

Water Analysis

RPT Date: Mar 22, 2017

PARAMETER	Batch	Sample Id	DUPLICATE Dup #1	DUPLICATE Dup #2	DUPLICATE RPD	Method Blank	REFERENCE MATERIAL Measured Value	REFERENCE MATERIAL Acceptable Limits Lower	REFERENCE MATERIAL Acceptable Limits Upper	METHOD BLANK SPIKE Recovery	METHOD BLANK SPIKE Acceptable Limits Lower	METHOD BLANK SPIKE Acceptable Limits Upper	MATRIX SPIKE Recovery	MATRIX SPIKE Acceptable Limits Lower	MATRIX SPIKE Acceptable Limits Upper
Water Quality Assessment - Groundwater Samples															
Electrical Conductivity	8241738		1620	1610	0.6%	< 2	103%	80%	120%	NA			NA		
pH	8241738		7.91	7.92	0.1%	NA	99%	90%	110%	NA			NA		
Total Dissolved Solids	8248350		754	800	5.9%	< 20	96%	80%	120%	NA			NA		
Alkalinity (as CaCO3)	8241738		104	104	0.0%	< 5	107%	80%	120%	NA			NA		
Bicarbonate (as CaCO3)	8241738		104	104	0.0%	< 5	NA			NA			NA		
Carbonate (as CaCO3)	8241738		<5	<5	NA	< 5	NA			NA			NA		
Hydroxide (as CaCO3)	8241738		<5	<5	NA	< 5	NA			NA			NA		
Fluoride	8245009	8245009	< 0.05	<0.05	NA	< 0.05	98%	90%	110%	104%	90%	110%	105%	80%	120%
Chloride	8245009	8245009	12.6	13.1	3.9%	< 0.10	94%	90%	110%	104%	90%	110%	99%	80%	120%
Nitrate as N	8245009	8245009	3.43	3.50	2.0%	< 0.05	95%	90%	110%	92%	90%	110%	98%	80%	120%
Nitrite as N	8245009	8245009	< 0.05	<0.05	NA	< 0.05	NA	90%	110%	96%	90%	110%	89%	80%	120%
Bromide	8245009	8245009	< 0.05	<0.05	NA	< 0.05	109%	90%	110%	98%	90%	110%	100%	80%	120%
Sulphate	8245009	8245009	18.9	19.1	1.1%	< 0.10	93%	90%	110%	97%	90%	110%	101%	80%	120%
Ortho Phosphate as P	8245009	8245009	< 0.10	<0.10	NA	< 0.10	103%	90%	110%	107%	90%	110%	98%	80%	120%
Reactive Silica	8244996	8244996	12.7	12.7	0.0%	< 0.05	96%	90%	110%	98%	90%	110%	82%	80%	120%
Ammonia as N	8249575		<0.02	<0.02	NA	< 0.02	97%	90%	110%	91%	90%	110%	84%	80%	120%
Total Phosphorus	8243025		0.06	0.06	NA	< 0.05	98%	80%	120%	97%	90%	110%	98%	70%	130%
Total Organic Carbon	8244996	8244996	1.3	1.4	NA	< 0.5	109%	90%	110%	NA	90%	110%	105%	80%	120%
Colour	8244996	8244996	< 5	<5	NA	< 5	106%	90%	110%	NA			NA		
Turbidity	8244996	8244996	135	135	0.0%	< 0.5	101%	90%	110%	NA			NA		
Calcium	8244996	8244996	97.9	98.4	0.5%	< 0.05	103%	90%	110%	102%	90%	110%	96%	70%	130%
Magnesium	8244996	8244996	28.4	28.1	1.1%	< 0.05	100%	90%	110%	100%	90%	110%	97%	70%	130%
Sodium	8244996	8244996	5.27	5.22	1.0%	< 0.05	99%	90%	110%	99%	90%	110%	99%	70%	130%
Potassium	8244996	8244996	1.18	1.14	3.4%	< 0.05	99%	90%	110%	99%	90%	110%	99%	70%	130%
Aluminum	8244996	8244996	0.006	0.006	NA	< 0.004	99%	90%	110%	110%	90%	110%	109%	70%	130%
Antimony	8244996	8244996	< 0.003	<0.003	NA	< 0.003	97%	90%	110%	105%	90%	110%	106%	70%	130%
Arsenic	8244996	8244996	0.006	0.006	NA	< 0.003	103%	90%	110%	102%	90%	110%	107%	70%	130%
Barium	8244996	8244996	0.073	0.072	1.4%	< 0.002	100%	90%	110%	102%	90%	110%	99%	70%	130%
Beryllium	8244996	8244996	< 0.001	<0.001	NA	< 0.001	103%	90%	110%	109%	90%	110%	108%	70%	130%
Boron	8244996	8244996	0.016	0.016	NA	< 0.010	100%	90%	110%	108%	90%	110%	103%	70%	130%
Cadmium	8244996	8244996	< 0.001	<0.001	NA	< 0.001	98%	90%	110%	106%	90%	110%	117%	70%	130%
Chromium	8244996	8244996	< 0.003	<0.003	NA	< 0.003	100%	90%	110%	107%	90%	110%	110%	70%	130%
Cobalt	8244996	8244996	< 0.001	<0.001	NA	< 0.001	96%	90%	110%	103%	90%	110%	104%	70%	130%
Copper	8244996	8244996	< 0.003	<0.003	NA	< 0.003	100%	90%	110%	109%	90%	110%	110%	70%	130%
Iron	8244996	8244996	0.167	0.145	14.1%	< 0.010	106%	90%	110%	105%	90%	110%	98%	70%	130%
Lead	8244996	8244996	< 0.002	<0.002	NA	< 0.002	100%	90%	110%	107%	90%	110%	103%	70%	130%
Manganese	8244996	8244996	0.019	0.018	5.4%	< 0.002	103%	90%	110%	107%	90%	110%	104%	70%	130%
Mercury	8245003	8245003	< 0.0001	<0.0001	NA	< 0.0001	102%	90%	110%	101%	90%	110%	94%	80%	120%
Molybdenum	8244996	8244996	< 0.002	<0.002	NA	< 0.002	100%	90%	110%	102%	90%	110%	104%	70%	130%

AGAT Laboratories is accredited to ISO/IEC 17025 by the Canadian Association for Laboratory Accreditation Inc. (CALA) and/or Standards Council of Canada (SCC) for specific tests listed on the scope of accreditation. AGAT Laboratories (Mississauga) is also accredited by the Canadian Association for Laboratory Accreditation Inc. (CALA) for specific drinking water tests. Accreditations are location and parameter specific. A complete listing of parameters for each location is available from www.cala.ca and/or www.scc.ca. The tests in this report may not necessarily be included in the scope of accreditation.

Results relate only to the items tested and to all the items tested

TOWN OF CALEDON
PLANNING
RECEIVED
Jul 12, 2021

AGAT Laboratories
5835 COOPERS AVENUE
MISSISSAUGA, ONTARIO
CANADA L4Z 1Y2
TEL (905)712-5100
FAX (905)712-5122
http://www.agatlabs.com

Quality Assurance

CLIENT NAME: R.J. BURNSIDE & ASSOCIATES LTD
AGAT WORK ORDER: 17W195195
PROJECT: 300033273
ATTENTION TO: Dwight Smikle
SAMPLING SITE:
SAMPLED BY:

Water Analysis (Continued)

RPT Date: Mar 22, 2017			DUPLICATE				REFERENCE MATERIAL			METHOD BLANK SPIKE			MATRIX SPIKE		
PARAMETER	Batch	Sample Id	Dup #1	Dup #2	RPD	Method Blank	Measured Value	Acceptable Limits		Recovery	Acceptable Limits		Recovery	Acceptable Limits	
								Lower	Upper		Lower	Upper		Lower	Upper
Nickel	8244996	8244996	< 0.003	<0.003	NA	< 0.003	103%	90%	110%	109%	90%	110%	107%	70%	130%
Selenium	8244996	8244996	< 0.004	<0.004	NA	< 0.004	100%	90%	110%	102%	90%	110%	110%	70%	130%
Silver	8244996	8244996	< 0.002	<0.002	NA	< 0.002	97%	90%	110%	108%	90%	110%	113%	70%	130%
Strontium	8244996	8244996	0.588	0.560	4.9%	< 0.005	106%	90%	110%	108%	90%	110%	112%	70%	130%
Thallium	8244996	8244996	< 0.006	<0.006	NA	< 0.006	104%	90%	110%	110%	90%	110%	108%	70%	130%
Tin	8244996	8244996	< 0.002	<0.002	NA	< 0.002	97%	90%	110%	102%	90%	110%	104%	70%	130%
Titanium	8244996	8244996	< 0.002	<0.002	NA	< 0.002	96%	90%	110%	100%	90%	110%	102%	70%	130%
Tungsten	8244996	8244996	< 0.010	<0.010	NA	< 0.010	94%	90%	110%	100%	90%	110%	98%	70%	130%
Uranium	8244996	8244996	< 0.002	<0.002	NA	< 0.002	104%	90%	110%	108%	90%	110%	106%	70%	130%
Vanadium	8244996	8244996	< 0.002	<0.002	NA	< 0.002	94%	90%	110%	102%	90%	110%	104%	70%	130%
Zinc	8244996	8244996	0.034	0.031	9.2%	< 0.005	102%	90%	110%	108%	90%	110%	110%	70%	130%
Zirconium	8244996	8244996	< 0.004	<0.004	NA	< 0.004	96%	90%	110%	96%	90%	110%	95%	70%	130%

Comments: NA signifies Not Applicable.
Duplicate Qualifier: As the measured result approaches the RL, the uncertainty associated with the value increases dramatically, thus duplicate acceptance limits apply only where the average of the two duplicates is greater than five times the RL.

Certified By:

AGAT Laboratories is accredited to ISO/IEC 17025 by the Canadian Association for Laboratory Accreditation Inc. (CALA) and/or Standards Council of Canada (SCC) for specific tests listed on the scope of accreditation. AGAT Laboratories (Mississauga) is also accredited by the Canadian Association for Laboratory Accreditation Inc. (CALA) for specific drinking water tests. Accreditations are location and parameter specific. A complete listing of parameters for each location is available from www.cala.ca and/or www.scc.ca. The tests in this report may not necessarily be included in the scope of accreditation.

Results relate only to the items tested and to all the items tested

TOWN OF CALEDON
PLANNING
RECEIVED
Jul 12, 2021

AGAT Laboratories
5835 COOPERS AVENUE
MISSISSAUGA, ONTARIO
CANADA L4Z 1Y2
TEL (905)712-5100
FAX (905)712-5122
http://www.agatlabs.com

Method Summary

CLIENT NAME: R.J. BURNSIDE & ASSOCIATES LTD

AGAT WORK ORDER: 17W195195

PROJECT: 300033273

ATTENTION TO: Dwight Smikle

SAMPLING SITE:

SAMPLED BY:

PARAMETER	AGAT S.O.P	LITERATURE REFERENCE	ANALYTICAL TECHNIQUE
Water Analysis			
Electrical Conductivity	INOR-93-6000	SM 2510 B	PC TITRATE
pH	INOR-93-6000	SM 4500-H+ B	PC TITRATE
Saturation pH		SM 2320 B	CALCULATION
Langelier Index		SM 2330B	CALCULATION
Total Hardness (as CaCO3)	MET-93-6105	EPA SW-846 6010C & 200.7	ICP/OES
Total Dissolved Solids	INOR-93-6028	SM 2540 C	BALANCE
Alkalinity (as CaCO3)	INOR-93-6000	SM 2320 B	PC TITRATE
Bicarbonate (as CaCO3)	INOR-93-6000	SM 2320 B	PC TITRATE
Carbonate (as CaCO3)	INOR-93-6000	SM 2320 B	PC TITRATE
Hydroxide (as CaCO3)	INOR-93-6000	SM 2320 B	PC TITRATE
Fluoride	INOR-93-6004	SM 4110 B	ION CHROMATOGRAPH
Chloride	INOR-93-6004	SM 4110 B	ION CHROMATOGRAPH
Nitrate as N	INOR-93-6004	SM 4110 B	ION CHROMATOGRAPH
Nitrite as N	INOR-93-6004	SM 4110 B	ION CHROMATOGRAPH
Bromide	INOR-93-6004	SM 4110 B	ION CHROMATOGRAPH
Sulphate	INOR-93-6004	SM 4110 B	ION CHROMATOGRAPH
Ortho Phosphate as P	INOR-93-6004	SM 4110 B	ION CHROMATOGRAPH
Reactive Silica	INOR-93-6047	SmartChem Method SIL-001-A & SM 4500 Si-F 18 &19th	DISCRETE ANALYZER
Ammonia as N	INOR-93-6059	QuikChem 10-107-06-1-J & SM 4500 NH3-F	LACHAT FIA
Total Phosphorus	INOR-93-6057	QuikChem 10-115-01-3-A & SM 4500-P I	LACHAT FIA
Total Organic Carbon	INOR-93-6049	EPA 415.1 & SM 5310	SHIMADZU CARBON ANALYZER
Colour	INOR-93-6046	SM 2120 B	SPECTROPHOTOMETER
Turbidity	INOR-93-6044	SM 2130 B	NEPHELOMETER
Calcium	MET-93-6105	EPA SW-846 6010C & 200.7	ICP/OES
Magnesium	MET-93-6105	EPA SW-846 6010C & 200.7	ICP/OES
Sodium	MET-93-6105	EPA SW-846 6010C & 200.7	ICP/OES
Potassium	MET-93-6105	EPA SW-846 6010C & 200.7	ICP/OES
Aluminum	MET-93-6103	EPA SW-846 6020A & 200.8	ICP-MS
Antimony	MET-93-6103	EPA SW-846 6020A & 200.8	ICP-MS
Arsenic	MET-93-6103	EPA SW-846 6020A & 200.8	ICP-MS
Barium	MET-93-6103	EPA SW-846 6020A & 200.8	ICP-MS
Beryllium	MET-93-6103	EPA SW-846 6020A & 200.8	ICP-MS
Boron	MET-93-6103	EPA SW-846 6020A & 200.8	ICP-MS
Cadmium	MET-93-6103	EPA SW-846 6020A & 200.8	ICP-MS
Chromium	MET-93-6103	EPA SW-846 6020A & 200.8	ICP-MS
Cobalt	MET-93-6103	EPA SW-846 6020A & 200.8	ICP-MS
Copper	MET-93-6103	EPA SW-846 6020A & 200.8	ICP-MS
Iron	MET-93-6103	EPA SW-846 6020A & 200.8	ICP-MS
Lead	MET-93-6103	EPA SW-846 6020A & 200.8	ICP-MS
Manganese	MET-93-6103	EPA SW-846 6020A & 200.8	ICP-MS
Mercury	MET-93-6100	EPA SW 846 7470 & 245.1	CVAAS
Molybdenum	MET-93-6103	EPA SW-846 6020A & 200.8	ICP-MS
Nickel	MET-93-6103	EPA SW-846 6020A & 200.8	ICP-MS
Selenium	MET-93-6103	EPA SW-846 6020A & 200.8	ICP-MS
Silver	MET-93-6103	EPA SW-846 6020A & 200.8	ICP-MS
Strontium	MET-93-6103	EPA SW-846 6020A & 200.8	ICP-MS
Thallium	MET-93-6103	EPA SW-846 6020A & 200.8	ICP-MS

Results relate only to the items tested and to all the items tested

TOWN OF CALEDON
PLANNING
RECEIVED
Jul 12, 2021

AGAT Laboratories

5835 COOPERS AVENUE
MISSISSAUGA, ONTARIO
CANADA L4Z 1Y2
TEL (905)712-5100
FAX (905)712-5122
http://www.agatlabs.com

Method Summary

CLIENT NAME: R.J. BURNSIDE & ASSOCIATES LTD

AGAT WORK ORDER: 17W195195

PROJECT: 300033273

ATTENTION TO: Dwight Smikle

SAMPLING SITE:

SAMPLED BY:

PARAMETER	AGAT S.O.P	LITERATURE REFERENCE	ANALYTICAL TECHNIQUE
Tin	MET-93-6103	EPA SW-846 6020A & 200.8	ICP-MS
Titanium	MET-93-6103	EPA SW-846 6020A & 200.8	ICP-MS
Tungsten	MET-93-6103	EPA SW-846 6020A & 200.8	ICP-MS
Uranium	MET-93-6103	EPA SW-846 6020A & 200.8	ICP-MS
Vanadium	MET-93-6103	EPA SW-846 6020A & 200.8	ICP-MS
Zinc	MET-93-6103	EPA SW-846 6020A & 200.8	ICP-MS
Zirconium	MET-93-6103	EPA SW-846 6020A & 200.8	ICP-MS
% Difference/ Ion Balance		SM 1030 E	CALCULATION

Results relate only to the items tested and to all the items tested

TOWN OF CALEDON
PLANNING
RECEIVED
Jul 12, 2021

AGAT Laboratories

2 Lg.

Short Holding Time

5835 Coopers Avenue
Mississauga, Ontario L4Z 1Y2
Tel: 905.712.5100 Fax: 905.712.5122
webearth.agatlabs.com

Laboratory Use Only

Work Order #: 17W195195

Cooler Quantity:

Arrival Temperatures: 6.7 | 5.9 | 5.8
6/5.9/4.8/4.6/5.1/5.3

Custody Seal Intact: ☐Yes ☐No ☐N/A

Notes:

Chain of Custody Record

If this is a Drinking Water sample, please use Drinking ~~Water Chain of Custody Form~~ (potable water intended for human consumption)

Report Information:

Company: RJ Burnside & Associates Ltd.
Contact: Dwight Smikle
Address: 292 Speedvale Ave. West
Unit #20 Guelph, ONT
Phone: Fax:
Reports to be sent to:
1. Email: dwight.smikle@rjburnside.com
2. Email: matt.valeriote@rjburnside.com

Regulatory Requirements: ☒ No Regulatory Requirement
(Please check all applicable boxes)

☐ Regulation 153/04
Table ____ Indicate One
☐ Ind/Com
☐ Res/Park
☐ Agriculture
Soil Texture (Check One)
☐ Coarse
☐ Fine

☐ Sewer Use
☐ Sanitary
☐ Storm
Region ____ Indicate One

☐ Regulation 558
☐ CCME
☐ Prov. Water Quality Objectives (PWQO)
☐ Other
____ Indicate One

Is this submission for a Record of Site Condition? ☐ Yes ☒ No

Report Guideline on Certificate of Analysis ☒ Yes ☐ No

Turnaround Time (TAT) Required:

Regular TAT ☒ 5 to 7 Business Days

Rush TAT (Rush Surcharges Apply)

☐ 3 Business Days ☐ 2 Business Days ☐ Next Business Day

OR Date Required (Rush Surcharges May Apply):

Please provide prior notification for rush TAT
**TAT is exclusive of weekends and statutory holidays*

For 'Same Day' analysis, please contact your AGAT CPM

Project Information:

Project: 300033273
Site Location: Belfountain, ONT
Sampled By: Matt Valeriote
AGAT Quote #: PO:
Please note: If quotation number is not provided, client will be billed full price for analysis.

Invoice Information: Bill To Same: Yes ☒ No ☐

Company:
Contact:
Address:
Email:

Sample Matrix Legend

B	Biota
GW	Ground Water
O	Oil
P	Paint
S	Soil
SD	Sediment
SW	Surface Water

O. Reg 153

Sample Identification	Date Sampled	Time Sampled	# of Containers	Sample Matrix	Comments/ Special Instructions	Field Filtered - Metals, Hg, CrVI (Y/N)	Metals and Inorganics	☐ All Metals ☐ 153 Metals (excl. Hydrides) ☐ Hydride Metals	ORPs: ☐ B-HWS ☐ Cl⁻ ☐ CN ☐ Cr⁶⁺ ☐ EC ☐ FOC ☐ Hg ☐ pH ☐ SAR	Full Metals Scan	Regulation/Custom Metals	Nutrients: ☐ TP ☐ NH₃ ☐ TKN ☐ NO₃ ☐ NO₂ ☐ NO₃+NO₂	Volatiles: ☐ VOC ☐ BTEX ☐ THM	CCME Fractions 1 to 4	ABNs	PAHs	PCBs: ☐ Total ☐ Aroclors	Organochlorine Pesticides	TCLP: ☐ M&I ☐ VOCs ☐ ABNs ☐ B(a)P ☐ PCBs	Sewer Use	W&A
TW 1	March 10, 2017	8:25	6	GW	* Field Filtered metals + mercury *	Y															X
TW 2		10:00				Y															X
TW 3		9:35				Y															X
TW 4		13:45				Y															X
TW 5		12:25				Y															X
TW 6		12:00				Y															X
TW 7		11:30				Y															X
TW 8		12:56				Y															X
TW 9		11:05				Y															X
TW 10		10:30				Y															X
TW 11		13:18				Y															X

Samples Relinquished By (Print Name and Sign):	Date	Time	Samples Received By (Print Name and Sign):	Date	Time
Matt Valeriote [signature]	March 10, 2017		[signature] Ranji Singh	2017 March 10	3:45pm
			Simran [signature]	17/3/11	7:58

Page 1 of 2

Nº: T 047459

TOWN OF CALEDON
PLANNING
RECEIVED
Jul 12, 2021

AGAT Laboratories
5835 Coopers Avenue
Mississauga, Ontario L4Z 1Y2
Ph: 905.712.5100 Fax: 905.712.5122
webearth.agatlabs.com

Short Holding Time

Chain of Custody Record

If this is a Drinking Water sample, please use Drinking Water Chain of Custody Form (potable water intended for human consumption)

Report Information:

Company: RJ Burnside & Associates Ltd.
Contact: dwight.Smikle
Address: 292 Speedvale Ave. West
unit #20, Guelph ONT
Phone: Fax:
Reports to be sent to:
1. Email: dwight.smikle@rjburnside.com
2. Email: matt.valeriote@rjburnside.com

Project Information:

Project: Belfountain # 300033273
Site Location: Belfountain, ONT
Sampled By: Matt Valeriote
AGAT Quote #: PO:
Please note: If quotation number is not provided, client will be billed full price for analysis.

Invoice Information:

Bill To Same: Yes ☒ No ☐
Company:
Contact:
Address:
Email:

Regulatory Requirements:

(Please check all applicable boxes)

☒ No Regulatory Requirement

☐ Regulation 153/04
Table ____ (Indicate One)
☐ Ind/Com
☐ Res/Park
☐ Agriculture
Soil Texture (Check One)
☐ Coarse
☐ Fine

☐ Sewer Use
☐ Sanitary
☐ Storm
Region ____ (Indicate One)

☐ Regulation 558
☐ CCME
☐ Prov. Water Quality Objectives (PWQO)
☐ Other
____ (Indicate One)

Is this submission for a **Record of Site Condition?** ☐ Yes ☒ No

Report Guideline on Certificate of Analysis ☒ Yes ☐ No

Laboratory Use Only

Work Order #:
Cooler Quantity:
Arrival Temperatures: 7.1 | 6.5 | 5.1
Custody Seal Intact: ☐ Yes ☐ No ☐ N/A
Notes:

Turnaround Time (TAT) Required:

Regular TAT ☒ 5 to 7 Business Days

Rush TAT (Rush Surcharges Apply)

☐ 3 Business Days ☐ 2 Business Days ☐ Next Business Day

OR Date Required (Rush Surcharges May Apply):

Please provide prior notification for rush TAT
*TAT is exclusive of weekends and statutory holidays

For 'Same Day' analysis, please contact your AGAT CPM

Sample Matrix Legend

B	Biota
GW	Ground Water
O	Oil
P	Paint
S	Soil
SD	Sediment
SW	Surface Water

Sample Identification	Date Sampled	Time Sampled	# of Containers	Sample Matrix	Comments/ Special Instructions	Field Filtered - Metals, Hg, CrVI (Y / N)	O. Reg 153: Metals and Inorganics; All Metals; 153 Metals (excl. Hydrides); Hydride Metals; ORPs: B-HWS, Cr, CN, Cr6+, EC, FOC, Hg, pH, SAR	Full Metals Scan	Regulation/Custom Metals	Nutrients: TP, NH4, TKN, NO3, NO2, NO3+NO2	Volatiles: VOC, BTEX, THM	CCME Fractions 1 to 4	ABNs	PAHs	PCBs: Total, Aroclors	Organochlorine Pesticides	TCLP: M&I, VOCs, ABNs, B(a)P, PCBs	Sewer Use	WQA
TW12	March 10, 2017	~~9:30~~ 9:00	6	GW	*Field Filtered mercury + Metals*	Y													X

Samples Relinquished By (Print Name and Sign):	Date	Time	Samples Received By (Print Name and Sign):	Date	Time
Matt Valeriote	March 10, 2017		Ranji Singh	2017 Mar 10	3:45 pm
Samples Relinquished By (Print Name and Sign):	Date	Time	Samples Received By (Print Name and Sign):	Date	Time
				17/3/11	9:35
Samples Relinquished By (Print Name and Sign):	Date	Time	Samples Received By (Print Name and Sign):	Date	Time

Page 2 of 2

N°: T 047460

TOWN OF CALEDON
PLANNING
RECEIVED
Jul 12, 2021

Maxxam
A Bureau Veritas Group Company

Your Project #: BELFOUNTAIN
Your C.O.C. #: 632231-02-01

Attention:Andrew O'Rourke

Cole Engineering Group Ltd
70 Valleywood Dr
Markham, ON
CANADA L3R 4T5

Report Date: 2017/10/10
Report #: R4770789
Version: 1 - Final

CERTIFICATE OF ANALYSIS

MAXXAM JOB #: B7M1626
Received: 2017/10/06, 16:35

Sample Matrix: Water
Samples Received: 13

Analyses	Quantity	Date Extracted	Date Analyzed	Laboratory Method	Reference
Nitrate (NO3) and Nitrite (NO2) in Water (1)	13	N/A	2017/10/10	CAM SOP-00440	SM 22 4500-NO3I/NO2B

Remarks:

Maxxam Analytics' laboratories are accredited to ISO/IEC 17025:2005 for specific parameters on scopes of accreditation. Unless otherwise noted, procedures used by Maxxam are based upon recognized Provincial, Federal or US method compendia such as CCME, MDDELCC, EPA, APHA.

All work recorded herein has been done in accordance with procedures and practices ordinarily exercised by professionals in Maxxam's profession using accepted testing methodologies, quality assurance and quality control procedures (except where otherwise agreed by the client and Maxxam in writing). All data is in statistical control and has met quality control and method performance criteria unless otherwise noted. All method blanks are reported: unless indicated otherwise, associated sample data are not blank corrected.

Maxxam Analytics' liability is limited to the actual cost of the requested analyses, unless otherwise agreed in writing. There is no other warranty expressed or implied. Maxxam has been retained to provide analysis of samples provided by the Client using the testing methodology referenced in this report. Interpretation and use of test results are the sole responsibility of the Client and are not within the scope of services provided by Maxxam, unless otherwise agreed in writing.

Solid sample results, except biota, are based on dry weight unless otherwise indicated. Organic analyses are not recovery corrected except for isotope dilution methods.
Results relate to samples tested.
This Certificate shall not be reproduced except in full, without the written approval of the laboratory.
Reference Method suffix "m" indicates test methods incorporate validated modifications from specific reference methods to improve performance.
* RPDs calculated using raw data. The rounding of final results may result in the apparent difference.
(1) Values for calculated parameters may not appear to add up due to rounding of raw data and significant figures.

Encryption Key

Please direct all questions regarding this Certificate of Analysis to your Project Manager.
Jolanta Goralczyk, Project Manager
Email: JGoralczyk@maxxam.ca
Phone# (905)817-5751

==========

Maxxam has procedures in place to guard against improper use of the electronic signature and have the required "signatories", as per section 5.10.2 of ISO/IEC 17025:2005(E), signing the reports. For Service Group specific validation please refer to the Validation Signature Page.

TOWN OF CALEDON
PLANNING
RECEIVED
Jul 12, 2021

Maxxam
A Bureau Veritas Group Company

Maxxam Job #: B7M1626
Report Date: 2017/10/10

Cole Engineering Group Ltd
Client Project #: BELFOUNTAIN
Sampler Initials: AO

RESULTS OF ANALYSES OF WATER

Maxxam ID			FGX671	FGX672	FGX673	FGX674	FGX675	FGX676		
Sampling Date			2017/10/05 13:20	2017/10/05 14:35	2017/10/05 15:40	2017/10/05 16:45	2017/10/06 09:05	2017/10/06 10:15		
COC Number			632231-02-01	632231-02-01	632231-02-01	632231-02-01	632231-02-01	632231-02-01		
	UNITS	MAC	TW1	TW12	TW3	TW10	TW4	TW9	RDL	QC Batch
Inorganics										
Nitrite (N)	mg/L	1	ND	ND	ND	ND	ND	ND	0.010	5202867
Nitrate (N)	mg/L	10	ND	ND	0.21	1.63	1.95	2.81	0.10	5202867
Nitrate + Nitrite (N)	mg/L	10	ND	ND	0.21	1.63	1.95	2.81	0.10	5202867

No Fill	No Exceedance
Grey	Exceeds 1 criteria policy/level
Black	Exceeds both criteria/levels

RDL = Reportable Detection Limit
QC Batch = Quality Control Batch
MAC: Ontario Drinking Water Standards - Maximum Acceptable Concentration [MAC], Interim Maximum Acceptable Concentration [IMC] & Table 4-Chemical/Physical Objectives [A/O] - Not Health Related, respectively
(Made under the Ontario Safe Drinking Water Act, 2002)
ND = Not detected

Maxxam ID			FGX677	FGX678	FGX679	FGX680	FGX681	FGX681		
Sampling Date			2017/10/05 17:40	2017/10/06 11:10	2017/10/06 12:20	2017/10/06 13:40	2017/10/06 14:35	2017/10/06 14:35		
COC Number			632231-02-01	632231-02-01	632231-02-01	632231-02-01	632231-02-01	632231-02-01		
	UNITS	MAC	TW2	TW11	TW8	TW7	TW5	TW5 Lab-Dup	RDL	QC Batch
Inorganics										
Nitrite (N)	mg/L	1	ND	ND	ND	ND	ND	ND	0.010	5202867
Nitrate (N)	mg/L	10	1.01	3.41	6.47	8.13	8.41	8.20	0.10	5202867
Nitrate + Nitrite (N)	mg/L	10	1.01	3.41	6.47	8.13	8.41	8.20	0.10	5202867

No Fill	No Exceedance
Grey	Exceeds 1 criteria policy/level
Black	Exceeds both criteria/levels

RDL = Reportable Detection Limit
QC Batch = Quality Control Batch
Lab-Dup = Laboratory Initiated Duplicate
MAC: Ontario Drinking Water Standards - Maximum Acceptable Concentration [MAC], Interim Maximum Acceptable Concentration [IMC] & Table 4-Chemical/Physical Objectives [A/O] - Not Health Related, respectively
(Made under the Ontario Safe Drinking Water Act, 2002)
ND = Not detected

Maxxam Analytics International Corporation o/a Maxxam Analytics 6740 Campobello Road, Mississauga, Ontario, L5N 2L8 Tel: (905) 817-5700 Toll-Free: 800-563-6266 Fax: (905) 817-5777 www.maxxam.ca

TOWN OF CALEDON
PLANNING
RECEIVED
Jul 12, 2021

Maxxam
A Bureau Veritas Group Company

Maxxam Job #: B7M1626
Report Date: 2017/10/10

Cole Engineering Group Ltd
Client Project #: BELFOUNTAIN
Sampler Initials: AO

RESULTS OF ANALYSES OF WATER

Maxxam ID			FGX682	FGX683		
Sampling Date			2017/10/06 15:25	2017/10/06 15:30		
COC Number			632231-02-01	632231-02-01		
	UNITS	MAC	TW6	TW106	RDL	QC Batch
Inorganics						
Nitrite (N)	mg/L	1	ND	ND	0.010	5202867
Nitrate (N)	mg/L	10	7.87	8.20	0.10	5202867
Nitrate + Nitrite (N)	mg/L	10	7.87	8.20	0.10	5202867

No Fill	No Exceedance
Grey	Exceeds 1 criteria policy/level
Black	Exceeds both criteria/levels

RDL = Reportable Detection Limit

QC Batch = Quality Control Batch

MAC: Ontario Drinking Water Standards - Maximum Acceptable Concentration [MAC], Interim Maximum Acceptable Concentration [IMC] & Table 4-Chemical/Physical Objectives [A/O] - Not Health Related, respectively
(Made under the Ontario Safe Drinking Water Act, 2002)

ND = Not detected

Maxxam Analytics International Corporation o/a Maxxam Analytics 6740 Campobello Road, Mississauga, Ontario, L5N 2L8 Tel: (905) 817-5700 Toll-Free: 800-563-6266 Fax: (905) 817-5777 www.maxxam.ca

TOWN OF CALEDON
PLANNING
RECEIVED
Jul 12, 2021

Maxxam
A Bureau Veritas Group Company

Maxxam Job #: B7M1626
Report Date: 2017/10/10

Cole Engineering Group Ltd
Client Project #: BELFOUNTAIN
Sampler Initials: AO

TEST SUMMARY

Maxxam ID: FGX671 **Collected:** 2017/10/05
Sample ID: TW1 **Shipped:**
Matrix: Water **Received:** 2017/10/06

Test Description	Instrumentation	Batch	Extracted	Date Analyzed	Analyst
Nitrate (NO3) and Nitrite (NO2) in Water	LACH	5202867	N/A	2017/10/10	Chandra Nandlal

Maxxam ID: FGX672 **Collected:** 2017/10/05
Sample ID: TW12 **Shipped:**
Matrix: Water **Received:** 2017/10/06

Test Description	Instrumentation	Batch	Extracted	Date Analyzed	Analyst
Nitrate (NO3) and Nitrite (NO2) in Water	LACH	5202867	N/A	2017/10/10	Chandra Nandlal

Maxxam ID: FGX673 **Collected:** 2017/10/05
Sample ID: TW3 **Shipped:**
Matrix: Water **Received:** 2017/10/06

Test Description	Instrumentation	Batch	Extracted	Date Analyzed	Analyst
Nitrate (NO3) and Nitrite (NO2) in Water	LACH	5202867	N/A	2017/10/10	Chandra Nandlal

Maxxam ID: FGX674 **Collected:** 2017/10/05
Sample ID: TW10 **Shipped:**
Matrix: Water **Received:** 2017/10/06

Test Description	Instrumentation	Batch	Extracted	Date Analyzed	Analyst
Nitrate (NO3) and Nitrite (NO2) in Water	LACH	5202867	N/A	2017/10/10	Chandra Nandlal

Maxxam ID: FGX675 **Collected:** 2017/10/06
Sample ID: TW4 **Shipped:**
Matrix: Water **Received:** 2017/10/06

Test Description	Instrumentation	Batch	Extracted	Date Analyzed	Analyst
Nitrate (NO3) and Nitrite (NO2) in Water	LACH	5202867	N/A	2017/10/10	Chandra Nandlal

Maxxam ID: FGX676 **Collected:** 2017/10/06
Sample ID: TW9 **Shipped:**
Matrix: Water **Received:** 2017/10/06

Test Description	Instrumentation	Batch	Extracted	Date Analyzed	Analyst
Nitrate (NO3) and Nitrite (NO2) in Water	LACH	5202867	N/A	2017/10/10	Chandra Nandlal

Maxxam ID: FGX677 **Collected:** 2017/10/05
Sample ID: TW2 **Shipped:**
Matrix: Water **Received:** 2017/10/06

Test Description	Instrumentation	Batch	Extracted	Date Analyzed	Analyst
Nitrate (NO3) and Nitrite (NO2) in Water	LACH	5202867	N/A	2017/10/10	Chandra Nandlal

Maxxam Analytics International Corporation o/a Maxxam Analytics 6740 Campobello Road, Mississauga, Ontario, L5N 2L8 Tel: (905) 817-5700 Toll-Free: 800-563-6266 Fax: (905) 817-5777 www.maxxam.ca

TOWN OF CALEDON
PLANNING
RECEIVED
Jul 12, 2021

Maxxam Job #: B7M1626
Report Date: 2017/10/10

Cole Engineering Group Ltd
Client Project #: BELFOUNTAIN
Sampler Initials: AO

TEST SUMMARY

Maxxam ID: FGX678 **Collected:** 2017/10/06
Sample ID: TW11 **Shipped:**
Matrix: Water **Received:** 2017/10/06

Test Description	Instrumentation	Batch	Extracted	Date Analyzed	Analyst
Nitrate (NO3) and Nitrite (NO2) in Water	LACH	5202867	N/A	2017/10/10	Chandra Nandlal

Maxxam ID: FGX679 **Collected:** 2017/10/06
Sample ID: TW8 **Shipped:**
Matrix: Water **Received:** 2017/10/06

Test Description	Instrumentation	Batch	Extracted	Date Analyzed	Analyst
Nitrate (NO3) and Nitrite (NO2) in Water	LACH	5202867	N/A	2017/10/10	Chandra Nandlal

Maxxam ID: FGX680 **Collected:** 2017/10/06
Sample ID: TW7 **Shipped:**
Matrix: Water **Received:** 2017/10/06

Test Description	Instrumentation	Batch	Extracted	Date Analyzed	Analyst
Nitrate (NO3) and Nitrite (NO2) in Water	LACH	5202867	N/A	2017/10/10	Chandra Nandlal

Maxxam ID: FGX681 **Collected:** 2017/10/06
Sample ID: TW5 **Shipped:**
Matrix: Water **Received:** 2017/10/06

Test Description	Instrumentation	Batch	Extracted	Date Analyzed	Analyst
Nitrate (NO3) and Nitrite (NO2) in Water	LACH	5202867	N/A	2017/10/10	Chandra Nandlal

Maxxam ID: FGX681 Dup **Collected:** 2017/10/06
Sample ID: TW5 **Shipped:**
Matrix: Water **Received:** 2017/10/06

Test Description	Instrumentation	Batch	Extracted	Date Analyzed	Analyst
Nitrate (NO3) and Nitrite (NO2) in Water	LACH	5202867	N/A	2017/10/10	Chandra Nandlal

Maxxam ID: FGX682 **Collected:** 2017/10/06
Sample ID: TW6 **Shipped:**
Matrix: Water **Received:** 2017/10/06

Test Description	Instrumentation	Batch	Extracted	Date Analyzed	Analyst
Nitrate (NO3) and Nitrite (NO2) in Water	LACH	5202867	N/A	2017/10/10	Chandra Nandlal

Maxxam ID: FGX683 **Collected:** 2017/10/06
Sample ID: TW106 **Shipped:**
Matrix: Water **Received:** 2017/10/06

Test Description	Instrumentation	Batch	Extracted	Date Analyzed	Analyst
Nitrate (NO3) and Nitrite (NO2) in Water	LACH	5202867	N/A	2017/10/10	Chandra Nandlal

Maxxam Analytics International Corporation o/a Maxxam Analytics 6740 Campobello Road, Mississauga, Ontario, L5N 2L8 Tel: (905) 817-5700 Toll-Free: 800-563-6266 Fax: (905) 817-5777 www.maxxam.ca

TOWN OF CALEDON
PLANNING
RECEIVED
Jul 12, 2021

Maxxam Job #: B7M1626
Report Date: 2017/10/10

Cole Engineering Group Ltd
Client Project #: BELFOUNTAIN
Sampler Initials: AO

GENERAL COMMENTS

Each temperature is the average of up to three cooler temperatures taken at receipt

Package 1	4.0°C

Results relate only to the items tested.

Maxxam Analytics International Corporation o/a Maxxam Analytics 6740 Campobello Road, Mississauga, Ontario, L5N 2L8 Tel: (905) 817-5700 Toll-Free: 800-563-6266 Fax: (905) 817-5777 www.maxxam.ca

TOWN OF CALEDON
PLANNING
RECEIVED
Jul 12, 2021

Maxxam
A Bureau Veritas Group Company

Maxxam Job #: B7M1626
Report Date: 2017/10/10

QUALITY ASSURANCE REPORT

Cole Engineering Group Ltd
Client Project #: BELFOUNTAIN
Sampler Initials: AO

			Matrix Spike		SPIKED BLANK		Method Blank		RPD	
QC Batch	Parameter	Date	% Recovery	QC Limits	% Recovery	QC Limits	Value	UNITS	Value (%)	QC Limits
5202867	Nitrate (N)	2017/10/10	82	80 - 120	100	80 - 120	ND, RDL=0.10	mg/L	2.6	20
5202867	Nitrite (N)	2017/10/10	104	80 - 120	103	80 - 120	ND, RDL=0.010	mg/L	NC	20

Duplicate: Paired analysis of a separate portion of the same sample. Used to evaluate the variance in the measurement.

Matrix Spike: A sample to which a known amount of the analyte of interest has been added. Used to evaluate sample matrix interference.

Spiked Blank: A blank matrix sample to which a known amount of the analyte, usually from a second source, has been added. Used to evaluate method accuracy.

Method Blank: A blank matrix containing all reagents used in the analytical procedure. Used to identify laboratory contamination.

NC (Duplicate RPD): The duplicate RPD was not calculated. The concentration in the sample and/or duplicate was too low to permit a reliable RPD calculation (absolute difference <= 2x RDL).

Maxxam Analytics International Corporation o/a Maxxam Analytics 6740 Campobello Road, Mississauga, Ontario, L5N 2L8 Tel: (905) 817-5700 Toll-Free: 800-563-6266 Fax: (905) 817-5777 www.maxxam.ca

TOWN OF CALEDON
PLANNING
RECEIVED
Jul 12, 2021

Maxxam
A Bureau Veritas Group Company

Maxxam Job #: B7M1626
Report Date: 2017/10/10

Cole Engineering Group Ltd
Client Project #: BELFOUNTAIN
Sampler Initials: AO

VALIDATION SIGNATURE PAGE

The analytical data and all QC contained in this report were reviewed and validated by the following individual(s).

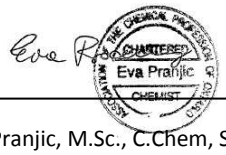

Ewa Pranjic, M.Sc., C.Chem, Scientific Specialist

Maxxam has procedures in place to guard against improper use of the electronic signature and have the required "signatories", as per section 5.10.2 of ISO/IEC 17025:2005(E), signing the reports. For Service Group specific validation please refer to the Validation Signature Page.

Maxxam Analytics International Corporation o/a Maxxam Analytics 6740 Campobello Road, Mississauga, Ontario, L5N 2L8 Tel: (905) 817-5700 Toll-Free: 800-563-6266 Fax: (905) 817-5777 www.maxxam.ca

TOWN OF CALEDON
PLANNING
RECEIVED

Jul 12, 2021

Maxxam
A Bureau Veritas Group Company

Maxxam Analytics International Corporation o/a Maxxam Analytics
6740 Campobello Road, Mississauga, Ontario Canada L5N 2L8 Tel (905) 817-5700 Toll-free 800-563-6266 Fax (905) 817-5777 www.maxxam.ca

CHAIN OF CUSTODY RECORD

INVOICE TO:
Company Name: #24008 Cole Engineering Group Ltd
Attention: Accounts Payable
Address: 70 Valleywood Dr
Markham ON L3R 4T5
Tel: (416) 987-6161 x Fax: (905) 940-2064 x
Email: accountspayable@coleengineering.ca

REPORT TO:
Company Name:
Attention: Andrew O'Rourke
Address:
Tel: Fax:
Email: aorourke@coleengineering.ca

PROJECT INFORMATION:
Quotation #: B02064
P.O. #:
Project:
Project Name: Belfountain
Site #:
Sampled By: A. O'Rourke

Laboratory Use Only:
Maxxam Job #:
Bottle Order #: 632231
COC #: C#632231-02-01
Project Manager: Jolanta Goralczyk

MOE REGULATED DRINKING WATER OR WATER INTENDED FOR HUMAN CONSUMPTION MUST BE SUBMITTED ON THE MAXXAM DRINKING WATER CHAIN OF CUSTODY

Regulation 153 (2011)
☐ Table 1 ☐ Res/Park ☐ Medium/Fine
☐ Table 2 ☐ Ind/Comm ☐ Coarse
☐ Table 3 ☐ Agri/Other ☐ For RSC
☐ Table ___

Other Regulations
☐ CCME ☐ Sanitary Sewer Bylaw
☐ Reg 558 ☐ Storm Sewer Bylaw
☐ MISA Municipality ___
☐ PWQO
☒ Other ODWS

Special Instructions

Include Criteria on Certificate of Analysis (Y/N)? Y

ANALYSIS REQUESTED (PLEASE BE SPECIFIC)

06-Oct-17 16:35
Jolanta Goralczyk
B7M1626
SEL ENV-928

Turnaround Time (TAT) Required:
Please provide advance notice for rush projects

Regular (Standard) TAT: ☐
(will be applied if Rush TAT is not specified):
Standard TAT = 5-7 Working days for most tests.
Please note: Standard TAT for certain tests such as BOD and Dioxins/Furans are > 5 days - contact your Project Manager for details.

Job Specific Rush TAT (if applies to entire submission)
Date Required: 24hr Time Required: ___ ☒
Rush Confirmation Number: JG2017100603
(call lab for #)

	Sample Barcode Label	Sample (Location) Identification	Date Sampled	Time Sampled	Matrix	Field Filtered (please circle): Metals / Hg / Cr VI	Nitrate (NO3) and Nitrite (NO2) in Water	# of Bottles	Comments
1		TW1	2017/10/05	13:20	GW	N	X	1	
2		TW12	2017/10/05	14:35	GW	N	X	1	
3		TW3	2017/10/5	15:40	GW	N	X	1	
4		TW10	2017/10/5	16:45	GW	N	X	1	
5		TW4	2017/10/06	09:05	GW	N	X	1	
6		TW9	2017/10/06	10:15	GW	N	X	1	
7		TW2	2017/10/05	17:40	GW	N	X	1	
8		TW11	2017/10/06	11:10	GW	N	X	1	
9		TW8	2017/10/06	12:20	GW	N	X	1	
10		TW7	2017/10/06	13:40	GW	N	X	1	

* RELINQUISHED BY: (Signature/Print)	Date: (YY/MM/DD)	Time	RECEIVED BY: (Signature/Print)	Date: (YY/MM/DD)	Time	# jars used and not submitted
Andrew O'Rourke Andrew O'Rourke	17/10/06		Jennifer McCarthy	2017/10/06	16:35	

Laboratory Use Only
Time Sensitive
Temperature (°C) on Recei: 5.3/4°C
Custody Seal Intact: Present ✓ / Yes / No

* UNLESS OTHERWISE AGREED TO IN WRITING, WORK SUBMITTED ON THIS CHAIN OF CUSTODY IS SUBJECT TO MAXXAM'S STANDARD TERMS AND CONDITIONS. SIGNING OF THIS CHAIN OF CUSTODY DOCUMENT IS ACKNOWLEDGMENT AND ACCEPTANCE OF OUR TERMS WHICH ARE AVAILABLE FOR VIEWING AT WWW.MAXXAM.CA/TERMS.

* IT IS THE RESPONSIBILITY OF THE RELINQUISHER TO ENSURE THE ACCURACY OF THE CHAIN OF CUSTODY RECORD. AN INCOMPLETE CHAIN OF CUSTODY MAY RESULT IN ANALYTICAL TAT DELAYS.

** SAMPLE CONTAINER, PRESERVATION, HOLD TIME AND PACKAGE INFORMATION CAN BE VIEWED AT HTTP://MAXXAM.CA/WP-CONTENT/UPLOADS/ONTARIO-COC.PDF.

SAMPLES MUST BE KEPT COOL (< 10° C) FROM TIME OF SAMPLING UNTIL DELIVERY TO MAXXAM

White: Maxxa Yellow: Client

Maxxam Analytics International Corporation o/a Maxxam Analytics

TOWN OF CALEDON
PLANNING
RECEIVED

Jul 12, 2021

Maxxam
A Bureau Veritas Group Company

Maxxam Analytics International Corporation o/a Maxxam Analytics
6740 Campobello Road, Mississauga, Ontario Canada L5N 2L8 Tel (905) 817-5700 Toll-free 800-563-6266 Fax (905) 817-5777 www.maxxam.ca

CHAIN OF CUSTODY RECORD

INVOICE TO:		REPORT TO:		PROJECT INFORMATION:		Laboratory Use Only:	
Company Name:	#24008 Cole Engineering Group Ltd	Company Name:		Quotation #:	B02064	Maxxam Job #:	Bottle Order #: 632231
Attention:	Accounts Payable	Attention:	Andrew O'Rourke	P.O. #:			
Address:	70 Valleywood Dr Markham ON L3R 4T5	Address:		Project:			
Tel:	(416) 987-6161 x Fax: (905) 940-2064 x	Tel:	Fax:	Project Name:	Belfountain	COC #: C#632231-03-01	Project Manager: Jolanta Goralczyk
Email:	accountspayable@coleengineering.ca	Email:	aorourke@coleengineering.ca	Site #:			
				Sampled By:	A. O'Rourke		

MOE REGULATED DRINKING WATER OR WATER INTENDED FOR HUMAN CONSUMPTION MUST BE SUBMITTED ON THE MAXXAM DRINKING WATER CHAIN OF CUSTODY

Regulation 153 (2011): ☐ Table 1 ☐ Res/Park ☐ Medium/Fine ☐ Table 2 ☐ Ind/Comm ☐ Coarse ☐ Table 3 ☐ Agri/Other ☐ For RSC ☐ Table ___

Other Regulations: ☐ CCME ☐ Sanitary Sewer Bylaw ☐ Reg 558 ☐ Storm Sewer Bylaw ☐ MISA Municipality ☐ PWQO ☒ Other ODWS

Special Instructions:

Include Criteria on Certificate of Analysis (Y/N)? Y

Turnaround Time (TAT) Required:
Please provide advance notice for rush projects

Regular (Standard) TAT: ☐
(will be applied if Rush TAT is not specified):
Standard TAT = 5-7 Working days for most tests.
Please note: Standard TAT for certain tests such as BOD and Dioxins/Furans are > 5 days - contact your Project Manager for details.

Job Specific Rush TAT (if applies to entire submission)
Date Required: 24hr Time Required: ☒
Rush Confirmation Number: JG2017100603 *(call lab for #)*

	Sample Barcode Label	Sample (Location) Identification	Date Sampled	Time Sampled	Matrix	Field Filtered (please circle): Metals / Hg / Cr VI	ANALYSIS REQUESTED (PLEASE BE SPECIFIC): Nitrate (NO3) and Nitrite (NO2) in Water	# of Bottles	Comments
1		TW5	2017/10/06	14:35	GW	N	X	1	
2		TW6	2017/10/06	15:25	GW	N	X	1	
3		TW106	2017/10/06	15:30	GW	N	X	1	
4									
5									
6									
7									
8									
9									
10									

* RELINQUISHED BY: (Signature/Print)	Date: (YY/MM/DD)	Time	RECEIVED BY: (Signature/Print)	Date: (YY/MM/DD)	Time	# jars used and not submitted
Andrew O'Rourke Andrew O'Rourke	17/10/06		JENNIFER MCCARTHY	2017/10/06	16:35	

Laboratory Use Only

Time Sensitive	Temperature (°C) on Recei	Custody Seal	Yes	No
	5.3 4 °C	Present	✓	
		Intact	✓	

* UNLESS OTHERWISE AGREED TO IN WRITING, WORK SUBMITTED ON THIS CHAIN OF CUSTODY IS SUBJECT TO MAXXAM'S STANDARD TERMS AND CONDITIONS. SIGNING OF THIS CHAIN OF CUSTODY DOCUMENT IS ACKNOWLEDGMENT AND ACCEPTANCE OF OUR TERMS WHICH ARE AVAILABLE FOR VIEWING AT WWW.MAXXAM.CA/TERMS.

* IT IS THE RESPONSIBILITY OF THE RELINQUISHER TO ENSURE THE ACCURACY OF THE CHAIN OF CUSTODY RECORD. AN INCOMPLETE CHAIN OF CUSTODY MAY RESULT IN ANALYTICAL TAT DELAYS.

** SAMPLE CONTAINER, PRESERVATION, HOLD TIME AND PACKAGE INFORMATION CAN BE VIEWED AT HTTP://MAXXAM.CA/WP-CONTENT/UPLOADS/ONTARIO-COC.PDF.

SAMPLES MUST BE KEPT COOL (< 10° C) FROM TIME OF SAMPLING UNTIL DELIVERY TO MAXXAM

White: Maxxa Yellow: Client

TOWN OF CALEDON
PLANNING
RECEIVED
Jul 12, 2021

Maxxam
A Bureau Veritas Group Company

Your Project #: 2017-0646
Site Location: BELFOUNTAIN
Your C.O.C. #: 646017-03-01, c#646017-01-01

Attention: Andrew O'Rourke

Cole Engineering Group Ltd
70 Valleywood Dr
Markham, ON
CANADA L3R 4T5

Report Date: 2018/06/11
Report #: R5230244
Version: 1 - Final

CERTIFICATE OF ANALYSIS

MAXXAM JOB #: B8D6744
Received: 2018/06/06, 18:04

Sample Matrix: Water
Samples Received: 13

Analyses	Quantity	Date Extracted	Date Analyzed	Laboratory Method	Reference
Nitrate (NO3) and Nitrite (NO2) in Water (1)	13	N/A	2018/06/08	CAM SOP-00440	SM 23 4500-NO3I/NO2B

Remarks:

Maxxam Analytics' laboratories are accredited to ISO/IEC 17025:2005 for specific parameters on scopes of accreditation. Unless otherwise noted, procedures used by Maxxam are based upon recognized Provincial, Federal or US method compendia such as CCME, MDDELCC, EPA, APHA.

All work recorded herein has been done in accordance with procedures and practices ordinarily exercised by professionals in Maxxam's profession using accepted testing methodologies, quality assurance and quality control procedures (except where otherwise agreed by the client and Maxxam in writing). All data is in statistical control and has met quality control and method performance criteria unless otherwise noted. All method blanks are reported; unless indicated otherwise, associated sample data are not blank corrected.

Maxxam Analytics' liability is limited to the actual cost of the requested analyses, unless otherwise agreed in writing. There is no other warranty expressed or implied. Maxxam has been retained to provide analysis of samples provided by the Client using the testing methodology referenced in this report. Interpretation and use of test results are the sole responsibility of the Client and are not within the scope of services provided by Maxxam, unless otherwise agreed in writing.

Solid sample results, except biota, are based on dry weight unless otherwise indicated. Organic analyses are not recovery corrected except for isotope dilution methods.
Results relate to samples tested.
This Certificate shall not be reproduced except in full, without the written approval of the laboratory.
Reference Method suffix "m" indicates test methods incorporate validated modifications from specific reference methods to improve performance.
* RPDs calculated using raw data. The rounding of final results may result in the apparent difference.
(1) Values for calculated parameters may not appear to add up due to rounding of raw data and significant figures.

Encryption Key

Please direct all questions regarding this Certificate of Analysis to your Project Manager.
Jolanta Goralczyk, Project Manager
Email: JGoralczyk@maxxam.ca
Phone# (905)817-5751

==========

Maxxam has procedures in place to guard against improper use of the electronic signature and have the required "signatories", as per section 5.10.2 of ISO/IEC 17025:2005(E), signing the reports. For Service Group specific validation please refer to the Validation Signature Page.

TOWN OF CALEDON
PLANNING
RECEIVED
Jul 12, 2021

Maxxam
A Bureau Veritas Group Company

Maxxam Job #: B8D6744
Report Date: 2018/06/11

Cole Engineering Group Ltd
Client Project #: 2017-0646
Site Location: BELFOUNTAIN
Sampler Initials: AO

RESULTS OF ANALYSES OF WATER

Maxxam ID		GWT317	GWT318	GWT319	GWT320	GWT321	GWT322		
Sampling Date		2018/06/05 10:55	2018/06/05 12:35	2018/06/05 14:20	2018/06/05 15:30	2018/06/05 17:00	2018/06/05 18:05		
COC Number		646017-03-01	646017-03-01	646017-03-01	646017-03-01	646017-03-01	646017-03-01		
	UNITS	TW1	TW12	TW3	TW10	TW2	TW9	RDL	QC Batch
Inorganics									
Nitrite (N)	mg/L	ND	ND	ND	ND	ND	ND	0.010	5569542
Nitrate (N)	mg/L	ND	ND	0.19	1.35	0.70	2.76	0.10	5569542
Nitrate + Nitrite (N)	mg/L	ND	ND	0.19	1.35	0.70	2.76	0.10	5569542

RDL = Reportable Detection Limit
QC Batch = Quality Control Batch
ND = Not detected

Maxxam ID		GWT323	GWT324	GWT325	GWT326	GWT327	GWT327		
Sampling Date		2018/06/06 09:45	2018/06/06 11:25	2018/06/06 13:05	2018/06/06 14:05	2018/06/06 15:50	2018/06/06 15:50		
COC Number		646017-03-01	646017-03-01	646017-03-01	646017-03-01	c#646017-01-01	c#646017-01-01		
	UNITS	TW4	TW11	TW8	TW7	TW6	TW6 Lab-Dup	RDL	QC Batch
Inorganics									
Nitrite (N)	mg/L	ND	ND	ND	ND	ND	ND	0.010	5569542
Nitrate (N)	mg/L	1.29	2.21	4.36	7.19	8.58	8.93	0.10	5569542
Nitrate + Nitrite (N)	mg/L	1.29	2.21	4.36	7.19	8.58	8.93	0.10	5569542

RDL = Reportable Detection Limit
QC Batch = Quality Control Batch
Lab-Dup = Laboratory Initiated Duplicate
ND = Not detected

Maxxam ID		GWT328	GWT329		
Sampling Date		2018/06/06 15:55	2018/06/06 16:45		
COC Number		c#646017-01-01	c#646017-01-01		
	UNITS	TW601	TW5	RDL	QC Batch
Inorganics					
Nitrite (N)	mg/L	ND	ND	0.010	5569542
Nitrate (N)	mg/L	8.98	8.38	0.10	5569542
Nitrate + Nitrite (N)	mg/L	8.98	8.38	0.10	5569542

RDL = Reportable Detection Limit
QC Batch = Quality Control Batch
ND = Not detected

Maxxam Analytics International Corporation o/a Maxxam Analytics 6740 Campobello Road, Mississauga, Ontario, L5N 2L8 Tel: (905) 817-5700 Toll-Free: 800-563-6266 Fax: (905) 817-5777 www.maxxam.ca

TOWN OF CALEDON
PLANNING
RECEIVED
Jul 12, 2021

Maxxam Job #: B8D6744
Report Date: 2018/06/11

Cole Engineering Group Ltd
Client Project #: 2017-0646
Site Location: BELFOUNTAIN
Sampler Initials: AO

TEST SUMMARY

Maxxam ID: GWT317 **Collected:** 2018/06/05
Sample ID: TW1 **Shipped:**
Matrix: Water **Received:** 2018/06/06

Test Description	Instrumentation	Batch	Extracted	Date Analyzed	Analyst
Nitrate (NO3) and Nitrite (NO2) in Water	LACH	5569542	N/A	2018/06/08	Chandra Nandlal

Maxxam ID: GWT318 **Collected:** 2018/06/05
Sample ID: TW12 **Shipped:**
Matrix: Water **Received:** 2018/06/06

Test Description	Instrumentation	Batch	Extracted	Date Analyzed	Analyst
Nitrate (NO3) and Nitrite (NO2) in Water	LACH	5569542	N/A	2018/06/08	Chandra Nandlal

Maxxam ID: GWT319 **Collected:** 2018/06/05
Sample ID: TW3 **Shipped:**
Matrix: Water **Received:** 2018/06/06

Test Description	Instrumentation	Batch	Extracted	Date Analyzed	Analyst
Nitrate (NO3) and Nitrite (NO2) in Water	LACH	5569542	N/A	2018/06/08	Chandra Nandlal

Maxxam ID: GWT320 **Collected:** 2018/06/05
Sample ID: TW10 **Shipped:**
Matrix: Water **Received:** 2018/06/06

Test Description	Instrumentation	Batch	Extracted	Date Analyzed	Analyst
Nitrate (NO3) and Nitrite (NO2) in Water	LACH	5569542	N/A	2018/06/08	Chandra Nandlal

Maxxam ID: GWT321 **Collected:** 2018/06/05
Sample ID: TW2 **Shipped:**
Matrix: Water **Received:** 2018/06/06

Test Description	Instrumentation	Batch	Extracted	Date Analyzed	Analyst
Nitrate (NO3) and Nitrite (NO2) in Water	LACH	5569542	N/A	2018/06/08	Chandra Nandlal

Maxxam ID: GWT322 **Collected:** 2018/06/05
Sample ID: TW9 **Shipped:**
Matrix: Water **Received:** 2018/06/06

Test Description	Instrumentation	Batch	Extracted	Date Analyzed	Analyst
Nitrate (NO3) and Nitrite (NO2) in Water	LACH	5569542	N/A	2018/06/08	Chandra Nandlal

Maxxam ID: GWT323 **Collected:** 2018/06/06
Sample ID: TW4 **Shipped:**
Matrix: Water **Received:** 2018/06/06

Test Description	Instrumentation	Batch	Extracted	Date Analyzed	Analyst
Nitrate (NO3) and Nitrite (NO2) in Water	LACH	5569542	N/A	2018/06/08	Chandra Nandlal

Maxxam Analytics International Corporation o/a Maxxam Analytics 6740 Campobello Road, Mississauga, Ontario, L5N 2L8 Tel: (905) 817-5700 Toll-Free: 800-563-6266 Fax: (905) 817-5777 www.maxxam.ca

TOWN OF CALEDON
PLANNING
RECEIVED
Jul 12, 2021

Maxxam Job #: B8D6744
Report Date: 2018/06/11

Cole Engineering Group Ltd
Client Project #: 2017-0646
Site Location: BELFOUNTAIN
Sampler Initials: AO

TEST SUMMARY

Maxxam ID: GWT324 **Collected:** 2018/06/06
Sample ID: TW11 **Shipped:**
Matrix: Water **Received:** 2018/06/06

Test Description	Instrumentation	Batch	Extracted	Date Analyzed	Analyst
Nitrate (NO3) and Nitrite (NO2) in Water	LACH	5569542	N/A	2018/06/08	Chandra Nandlal

Maxxam ID: GWT325 **Collected:** 2018/06/06
Sample ID: TW8 **Shipped:**
Matrix: Water **Received:** 2018/06/06

Test Description	Instrumentation	Batch	Extracted	Date Analyzed	Analyst
Nitrate (NO3) and Nitrite (NO2) in Water	LACH	5569542	N/A	2018/06/08	Chandra Nandlal

Maxxam ID: GWT326 **Collected:** 2018/06/06
Sample ID: TW7 **Shipped:**
Matrix: Water **Received:** 2018/06/06

Test Description	Instrumentation	Batch	Extracted	Date Analyzed	Analyst
Nitrate (NO3) and Nitrite (NO2) in Water	LACH	5569542	N/A	2018/06/08	Chandra Nandlal

Maxxam ID: GWT327 **Collected:** 2018/06/06
Sample ID: TW6 **Shipped:**
Matrix: Water **Received:** 2018/06/06

Test Description	Instrumentation	Batch	Extracted	Date Analyzed	Analyst
Nitrate (NO3) and Nitrite (NO2) in Water	LACH	5569542	N/A	2018/06/08	Chandra Nandlal

Maxxam ID: GWT327 Dup **Collected:** 2018/06/06
Sample ID: TW6 **Shipped:**
Matrix: Water **Received:** 2018/06/06

Test Description	Instrumentation	Batch	Extracted	Date Analyzed	Analyst
Nitrate (NO3) and Nitrite (NO2) in Water	LACH	5569542	N/A	2018/06/08	Chandra Nandlal

Maxxam ID: GWT328 **Collected:** 2018/06/06
Sample ID: TW601 **Shipped:**
Matrix: Water **Received:** 2018/06/06

Test Description	Instrumentation	Batch	Extracted	Date Analyzed	Analyst
Nitrate (NO3) and Nitrite (NO2) in Water	LACH	5569542	N/A	2018/06/08	Chandra Nandlal

Maxxam ID: GWT329 **Collected:** 2018/06/06
Sample ID: TW5 **Shipped:**
Matrix: Water **Received:** 2018/06/06

Test Description	Instrumentation	Batch	Extracted	Date Analyzed	Analyst
Nitrate (NO3) and Nitrite (NO2) in Water	LACH	5569542	N/A	2018/06/08	Chandra Nandlal

Maxxam Analytics International Corporation o/a Maxxam Analytics 6740 Campobello Road, Mississauga, Ontario, L5N 2L8 Tel: (905) 817-5700 Toll-Free: 800-563-6266 Fax: (905) 817-5777 www.maxxam.ca

TOWN OF CALEDON
PLANNING
RECEIVED
Jul 12, 2021

Maxxam Job #: B8D6744
Report Date: 2018/06/11

Cole Engineering Group Ltd
Client Project #: 2017-0646
Site Location: BELFOUNTAIN
Sampler Initials: AO

GENERAL COMMENTS

Each temperature is the average of up to three cooler temperatures taken at receipt

Package 1	5.0°C

Results relate only to the items tested.

Maxxam Analytics International Corporation o/a Maxxam Analytics 6740 Campobello Road, Mississauga, Ontario, L5N 2L8 Tel: (905) 817-5700 Toll-Free: 800-563-6266 Fax: (905) 817-5777 www.maxxam.ca

TOWN OF CALEDON
PLANNING
RECEIVED
Jul 12, 2021

Maxxam
A Bureau Veritas Group Company

Maxxam Job #: B8D6744
Report Date: 2018/06/11

QUALITY ASSURANCE REPORT

Cole Engineering Group Ltd
Client Project #: 2017-0646
Site Location: BELFOUNTAIN
Sampler Initials: AO

			Matrix Spike		SPIKED BLANK		Method Blank		RPD	
QC Batch	Parameter	Date	% Recovery	QC Limits	% Recovery	QC Limits	Value	UNITS	Value (%)	QC Limits
5569542	Nitrate (N)	2018/06/08	90	80 - 120	98	80 - 120	ND, RDL=0.10	mg/L	4.0	20
5569542	Nitrite (N)	2018/06/08	93	80 - 120	98	80 - 120	ND, RDL=0.010	mg/L	NC	20

Duplicate: Paired analysis of a separate portion of the same sample. Used to evaluate the variance in the measurement.

Matrix Spike: A sample to which a known amount of the analyte of interest has been added. Used to evaluate sample matrix interference.

Spiked Blank: A blank matrix sample to which a known amount of the analyte, usually from a second source, has been added. Used to evaluate method accuracy.

Method Blank: A blank matrix containing all reagents used in the analytical procedure. Used to identify laboratory contamination.

NC (Duplicate RPD): The duplicate RPD was not calculated. The concentration in the sample and/or duplicate was too low to permit a reliable RPD calculation (absolute difference <= 2x RDL).

Maxxam Analytics International Corporation o/a Maxxam Analytics 6740 Campobello Road, Mississauga, Ontario, L5N 2L8 Tel: (905) 817-5700 Toll-Free: 800-563-6266 Fax: (905) 817-5777 www.maxxam.ca

TOWN OF CALEDON
PLANNING
RECEIVED
Jul 12, 2021

Maxxam
A Bureau Veritas Group Company

Maxxam Job #: B8D6744
Report Date: 2018/06/11

Cole Engineering Group Ltd
Client Project #: 2017-0646
Site Location: BELFOUNTAIN
Sampler Initials: AO

VALIDATION SIGNATURE PAGE

The analytical data and all QC contained in this report were reviewed and validated by the following individual(s).

Cristina Carriere

Cristina Carriere, Scientific Service Specialist

Maxxam has procedures in place to guard against improper use of the electronic signature and have the required "signatories", as per section 5.10.2 of ISO/IEC 17025:2005(E), signing the reports. For Service Group specific validation please refer to the Validation Signature Page.

Maxxam Analytics International Corporation o/a Maxxam Analytics 6740 Campobello Road, Mississauga, Ontario, L5N 2L8 Tel: (905) 817-5700 Toll-Free: 800-563-6266 Fax: (905) 817-5777 www.maxxam.ca

TOWN OF CALEDON
PLANNING
RECEIVED

Jul 12, 2021

Maxxam
A Bureau Veritas Group Company

Maxxam Analytics International Corporation o/a Maxxam Analytics
6740 Campobello Road, Mississauga, Ontario Canada L5N 2L8 Tel:(905) 817-5700 Toll-free:800-563-6266 Fax:(905) 817-5777 www.maxxam.ca

CHAIN OF CUSTODY RECORD

Page 1 of 2

INVOICE TO:		REPORT TO:		PROJECT INFORMATION:		Laboratory Use Only:	
Company Name:	#24008 Cole Engineering Group Ltd	Company Name:	Cole Engineering	Quotation #:	B02064	Maxxam Job #:	Bottle Order #: 646017
Attention:	Accounts Payable	Attention:	Andrew O'Rourke	P.O. #:			
Address:	70 Valleywood Dr Markham ON L3R 4T5	Address:		Project:	2017-0646		
				Project Name:	Belfountian	COC #:	Project Manager:
Tel:	(416) 987-6161 x Fax: (905) 940-2064 x	Tel:	Fax:	Site #:		C#646017-03-01	Jolanta Goralczyk
Email:	accountspayable@coleengineering.ca	Email:	aorourke@coleengineering.ca	Sampled By:	Andrew O'Rourke		

MOE REGULATED DRINKING WATER OR WATER INTENDED FOR HUMAN CONSUMPTION MUST BE SUBMITTED ON THE MAXXAM DRINKING WATER CHAIN OF CUSTODY

Regulation 153 (2011)	Other Regulations	Special Instructions
☐ Table 1 ☐ Res/Park ☐ Medium/Fine	☐ CCME ☐ Sanitary Sewer Bylaw	
☐ Table 2 ☐ Ind/Comm ☐ Coarse	☐ Reg 558 ☐ Storm Sewer Bylaw	
☐ Table 3 ☐ Agri/Other ☐ For RSC	☐ MISA Municipality ____	
☐ Table ____	☒ PWQO	
	☒ Other ODWS	

Include Criteria on Certificate of Analysis (Y/N)? N

ANALYSIS REQUESTED (PLEASE BE SPECIFIC)

Turnaround Time (TAT) Required:
Please provide advance notice for rush projects

Regular (Standard) TAT: ☒
(will be applied if Rush TAT is not specified)
Standard TAT = 5-7 Working days for most tests.
Please note: Standard TAT for certain tests such as BOD and Dioxins/Furans are > 5 days - contact your Project Manager for details.

Job Specific Rush TAT (if applies to entire submission)
Date Required: ____ Time Required: ____ ☐
Rush Confirmation Number: ____ *(call lab for #)*

06-Jun-18 18:04
Jolanta Goralczyk
B8D6744
PS4 ENV-970

	Sample Barcode Label	Sample (Location) Identification	Date Sampled	Time Sampled	Matrix	Field Filtered (please circle): Metals / Hg / Cr VI	Nitrate (NO3) and Nitrite (NO2) in Water	# of Bottles	Comments
1		TW1	2018/06/05	10:55	GW	N	X	1	
2		TW12		12:35	GW	N	X	1	
3		TW3		14:20	GW	N	X	1	
4		TW10		15:30	GW	N	X	1	
5		TW2		17:00	GW	N	X	1	
6		TW9		18:05	GW	N	X	1	
7		TW4	2018/06/06	9:45	GW	N	X	1	
8		TW11		11:25	GW	N	X	1	
9		TW8		13:05	GW	N	X	1	
10		TW7		14:05	GW	N	X	1	

* RELINQUISHED BY: (Signature/Print)	Date: (YY/MM/DD)	Time	RECEIVED BY: (Signature/Print)	Date: (YY/MM/DD)	Time	# jars used and not submitted
Andrew O'Rourke/Andrew O'Rourke	18/06/06	19:00	[illegible]	2018/06/06	1P:04	

Laboratory Use Only

Time Sensitive	Temperature (°C) on Recei	Custody Seal	Yes	No
	7/4/4	Present	✓	
		Intact		

* UNLESS OTHERWISE AGREED TO IN WRITING, WORK SUBMITTED ON THIS CHAIN OF CUSTODY IS SUBJECT TO MAXXAM'S STANDARD TERMS AND CONDITIONS. SIGNING OF THIS CHAIN OF CUSTODY DOCUMENT IS ACKNOWLEDGMENT AND ACCEPTANCE OF OUR TERMS WHICH ARE AVAILABLE FOR VIEWING AT WWW.MAXXAM.CA/TERMS.

* IT IS THE RESPONSIBILITY OF THE RELINQUISHER TO ENSURE THE ACCURACY OF THE CHAIN OF CUSTODY RECORD. AN INCOMPLETE CHAIN OF CUSTODY MAY RESULT IN ANALYTICAL TAT DELAYS.

** SAMPLE CONTAINER, PRESERVATION, HOLD TIME AND PACKAGE INFORMATION CAN BE VIEWED AT HTTP://MAXXAM.CA/WP-CONTENT/UPLOADS/ONTARIO-COC.PDF.

SAMPLES MUST BE KEPT COOL (< 10° C) FROM TIME OF SAMPLING UNTIL DELIVERY TO MAXXAM

White: Maxxa Yellow: Client

Maxxam Analytics International Corporation o/a Maxxam Analytics

TOWN OF CALEDON
PLANNING
RECEIVED

Jul 12, 2021

Maxxam
A Bureau Veritas Group Company

Maxxam Analytics International Corporation o/a Maxxam Analytics
6740 Campobello Road, Mississauga, Ontario Canada L5N 2L8 Tel:(905) 817-5700 Toll-free:800-563-6266 Fax:(905) 817-5777 www.maxxam.ca

CHAIN OF CUSTODY RECORD

INVOICE TO:		REPORT TO:		PROJECT INFORMATION:		Laboratory Use Only:	
Company Name:	#24008 Cole Engineering Group Ltd	Company Name:	Cole Engineering	Quotation #:	B02064	Maxxam Job #:	Bottle Order #: 646017
Attention:	Accounts Payable	Attention:	Andrew O'Rourke	P.O. #:			
Address:	70 Valleywood Dr Markham ON L3R 4T5	Address:		Project:	2017-0646	COC #: C#646017-01-01	Project Manager: Jolanta Goralczyk
Tel:	(416) 987-6161 x Fax: (905) 940-2064 x	Tel:	Fax:	Project Name:	Belfountain		
Email:	accountspayable@coleengineering.ca	Email:	aorourke@coleengineering.ca	Site #:			
				Sampled By:	Andrew O'Rourke		

MOE REGULATED DRINKING WATER OR WATER INTENDED FOR HUMAN CONSUMPTION MUST BE SUBMITTED ON THE MAXXAM DRINKING WATER CHAIN OF CUSTODY

Regulation 153 (2011)
- ☐ Table 1 ☐ Res/Park ☐ Medium/Fine
- ☐ Table 2 ☐ Ind/Comm ☐ Coarse
- ☐ Table 3 ☐ Agri/Other ☐ For RSC
- ☐ Table ___

Other Regulations
- ☐ CCME ☐ Sanitary Sewer Bylaw
- ☐ Reg 558. ☐ Storm Sewer Bylaw
- ☐ MISA Municipality ___
- ☒ PWQO
- ☒ Other ODWS

Special Instructions

Include Criteria on Certificate of Analysis (Y/N)? ___

Turnaround Time (TAT) Required:
Please provide advance notice for rush projects

Regular (Standard) TAT:
(will be applied if Rush TAT is not specified):
Standard TAT = 5-7 Working days for most tests.
Please note: Standard TAT for certain tests such as BOD and Dioxins/Furans are > 5 days - contact your Project Manager for details.
☒

Job Specific Rush TAT (if applies to entire submission)
Date Required: ___ Time Required: ___ ☐
Rush Confirmation Number: ___ *(call lab for #)*

	Sample Barcode Label	Sample (Location) Identification	Date Sampled	Time Sampled	Matrix	Field Filtered (please circle): Metals / Hg / Cr VI	Nitrate (NO3) and Nitrite (NO2) in Water	# of Bottles	Comments
1		TW6	2018/06/06	15:50	GW	N	X	1	
2		TW601		15:55	GW	N	X	1	
3		TW5		16:45	GW	N	X	1	
4									
5									
6									
7									
8									
9									
10									

* RELINQUISHED BY: (Signature/Print)	Date: (YY/MM/DD)	Time	RECEIVED BY: (Signature/Print)	Date: (YY/MM/DD)	Time	# jars used and not submitted	Laboratory Use Only				
Andrew O'Rourke/Andrew O'Rourke	18/06/06	18:00	See page 1				Time Sensitive	Temperature (°C) on Recei	Custody Seal Present	Yes	No
									Intact		

* UNLESS OTHERWISE AGREED TO IN WRITING, WORK SUBMITTED ON THIS CHAIN OF CUSTODY IS SUBJECT TO MAXXAM'S STANDARD TERMS AND CONDITIONS. SIGNING OF THIS CHAIN OF CUSTODY DOCUMENT IS ACKNOWLEDGMENT AND ACCEPTANCE OF OUR TERMS WHICH ARE AVAILABLE FOR VIEWING AT WWW.MAXXAM.CA/TERMS.

* IT IS THE RESPONSIBILITY OF THE RELINQUISHER TO ENSURE THE ACCURACY OF THE CHAIN OF CUSTODY RECORD. AN INCOMPLETE CHAIN OF CUSTODY MAY RESULT IN ANALYTICAL TAT DELAYS.

** SAMPLE CONTAINER, PRESERVATION, HOLD TIME AND PACKAGE INFORMATION CAN BE VIEWED AT HTTP://MAXXAM.CA/WP-CONTENT/UPLOADS/ONTARIO-COC.PDF.

SAMPLES MUST BE KEPT COOL (< 10° C) FROM TIME OF SAMPLING UNTIL DELIVERY TO MAXXAM

White: Maxxa Yellow: Client

Maxxam Analytics International Corporation o/a Maxxam Analytics

TOWN OF CALEDON
PLANNING
RECEIVED
Jul 12, 2021

COLE ENGINEERING GROUP LTD
ATTN: ARON ZHAO
2620 Bristol Circle #300
Oakville ON L6H 6Z7

Date Received: 09-MAR-20
Report Date: 20-MAR-20 11:45 (MT)
Version: FINAL

Client Phone: 905-940-6161

Certificate of Analysis

Lab Work Order #: L2425657

Project P.O. #: NOT SUBMITTED
Job Reference: 2017-646
C of C Numbers:
Legal Site Desc:

Comments: L2425657-2 - Total Coliform analysis was originally performed within the analytical hold time however the bacterial count could not be obtained due overgrowth and a missed dilution. The sample was then re-analyzed past the hold time to obtain a count of 66000 CFU/100mL

Emily Smith
Account Manager

[This report shall not be reproduced except in full without the written authority of the Laboratory.]

TOWN OF CALEDON
PLANNING
RECEIVED
Jul 12, 2021

ALS Environmental

ANALYTICAL GUIDELINE REPORT

2017-646

Sample Details Grouping / Analyte	Result	Qualifier	D.L.	Units	Analyzed	Guideline Limits #1	Guideline Limits #2
L2425657-1 TW1							
Sampled By: AZ on 08-MAR-20							
Matrix: WATER							
Physical Tests							
Total Dissolved Solids	413	DLDS	20	mg/L	19-MAR-20		500
Turbidity	23.3		0.10	NTU	10-MAR-20		*5
Anions and Nutrients							
Nitrate (as N)	<0.020		0.020	mg/L	10-MAR-20	10	
Nitrite (as N)	<0.010		0.010	mg/L	10-MAR-20	1	
Sulfate (SO4)	71.5		0.30	mg/L	10-MAR-20		500
Bacteriological Tests							
E. Coli	0		0	CFU/100mL	10-MAR-20	0	
Heterotrophic Plate Count	3		0	CFU/mL	10-MAR-20		
Total Coliform Background	20		0	CFU/100mL	10-MAR-20		
Total Coliforms	0		0	CFU/100mL	10-MAR-20	0	
Total Metals							
Iron (Fe)-Total	4890		50	ug/L	11-MAR-20		*300
Polycyclic Aromatic Hydrocarbons							
Benzo(a)pyrene	<0.0050		0.0050	ug/L	19-MAR-20	0.01	
Surrogate: d14-Terphenyl	98.8		40-130	%	19-MAR-20		
Organochlorine Pesticides							
alpha-Chlordane	<0.10		0.10	ug/L	18-MAR-20		
gamma-Chlordane	<0.10		0.10	ug/L	18-MAR-20		
p,p-DDD	<0.10		0.10	ug/L	18-MAR-20		
p,p-DDE	<0.10		0.10	ug/L	18-MAR-20		
o,p-DDT	<0.10		0.10	ug/L	18-MAR-20		
p,p-DDT	<0.10		0.10	ug/L	18-MAR-20		
Oxychlordane	<0.10		0.10	ug/L	18-MAR-20		
Surrogate: d14-Terphenyl	72.5		40-130	%	18-MAR-20		
Herbicides							
Bromoxynil	<0.20		0.20	ug/L	12-MAR-20	5	
2,4-D	<0.20		0.20	ug/L	12-MAR-20	100	
Dicamba	<0.20		0.20	ug/L	12-MAR-20	120	
Glyphosate	<5.0		5.0	ug/L	13-MAR-20	280	
MCPA	<0.20		0.20	ug/L	12-MAR-20	100	
Picloram	<0.20		0.20	ug/L	12-MAR-20	190	
Surrogate: 2,4-Dichlorophenylacetic Acid	109.0		50-130	%	12-MAR-20		
Pesticides							
Alachlor	<0.10		0.10	ug/L	18-MAR-20	5	
Atrazine	<0.10		0.10	ug/L	18-MAR-20		
Atrazine & Metabolites	<0.20		0.20	ug/L	18-MAR-20	5	
Azinphos-methyl	<0.10		0.10	ug/L	18-MAR-20	20	
Carbaryl	<0.20		0.20	ug/L	18-MAR-20	90	
Carbofuran	<0.20		0.20	ug/L	18-MAR-20	90	
Chlorpyrifos	<0.10		0.10	ug/L	18-MAR-20	90	
Diazinon	<0.10		0.10	ug/L	18-MAR-20	20	
Dimethoate	<0.10		0.10	ug/L	18-MAR-20	20	

** Detection Limit for result exceeds Guideline Limit. Assessment against Guideline Limit cannot be made.
* Analytical result for this parameter exceeds Guideline Limit listed on this report. Guideline Limits applied:

Ontario Drinking Water Regulation (ODWQS) JAN.1,2020 = [Suite] - ON-DW-STANDARD+GUIDELINES

#1: Schedule 1 (Microbiological) and 2 (Chemical) Standards (JAN,2020) **#2: Ontario DW Aesthetic and Operational Guidelines (June, 2006)**

TOWN OF CALEDON
PLANNING
RECEIVED
Jul 12, 2021

Environmental

ANALYTICAL GUIDELINE REPORT

2017-646

Sample Details Grouping / Analyte	Result	Qualifier	D.L.	Units	Analyzed	Guideline Limits #1	Guideline Limits #2
L2425657-1 TW1							
Sampled By: AZ on 08-MAR-20							
Matrix: WATER							
Pesticides							
Diquat	<1.0		1.0	ug/L	09-MAR-20	70	
Atrazine Desethyl	<0.10		0.10	ug/L	18-MAR-20		
Malathion	<0.10		0.10	ug/L	18-MAR-20	190	
Diclofop-methyl	<0.20		0.20	ug/L	18-MAR-20	9	
Metolachlor	<0.10		0.10	ug/L	18-MAR-20	50	
Metribuzin	<0.10		0.10	ug/L	18-MAR-20	80	
Paraquat	<1.0		1.0	ug/L	09-MAR-20	10	
Phorate	<0.10		0.10	ug/L	18-MAR-20	2	
Prometryne	<0.10		0.10	ug/L	18-MAR-20	1	
Simazine	<0.10		0.10	ug/L	18-MAR-20	10	
Terbufos	<0.20		0.20	ug/L	18-MAR-20	1	
Triallate	<0.10		0.10	ug/L	18-MAR-20	230	
Trifluralin	<0.10		0.10	ug/L	18-MAR-20	45	
Surrogate: 2-Fluorobiphenyl	85.2		40-130	%	18-MAR-20		
L2425657-2 TW2							
Sampled By: AZ on 08-MAR-20							
Matrix: WATER							
Physical Tests							
Total Dissolved Solids	75	DLDS	13	mg/L	19-MAR-20		500
Turbidity	66.4		0.10	NTU	10-MAR-20		*5
Anions and Nutrients							
Nitrate (as N)	1.02		0.020	mg/L	10-MAR-20	10	
Nitrite (as N)	0.043		0.010	mg/L	10-MAR-20	1	
Sulfate (SO4)	1.38		0.30	mg/L	10-MAR-20		500
Bacteriological Tests							
E. Coli	0		0	CFU/100mL	10-MAR-20	0	
Heterotrophic Plate Count	2130	DLM	0	CFU/mL	10-MAR-20		
Total Coliform Background	31000	RRA:MD	1000	CFU/100mL	11-MAR-20		
Total Coliforms	66000	RRA:MD	1000	CFU/100mL	11-MAR-20	*0	
Total Metals							
Iron (Fe)-Total	9180		50	ug/L	11-MAR-20		*300
L2425657-3 TW3							
Sampled By: AZ on 08-MAR-20							
Matrix: WATER							
Physical Tests							
Total Dissolved Solids	513	DLDS	20	mg/L	19-MAR-20		*500
Turbidity	23.9		0.10	NTU	10-MAR-20		*5
Anions and Nutrients							
Nitrate (as N)	0.127		0.020	mg/L	10-MAR-20	10	
Nitrite (as N)	<0.010		0.010	mg/L	10-MAR-20	1	
Sulfate (SO4)	147		0.30	mg/L	10-MAR-20		500

** Detection Limit for result exceeds Guideline Limit. Assessment against Guideline Limit cannot be made.
* Analytical result for this parameter exceeds Guideline Limit listed on this report. Guideline Limits applied:

Ontario Drinking Water Regulation (ODWQS) JAN.1,2020 = [Suite] - ON-DW-STANDARD+GUIDELINES

#1: Schedule 1 (Microbiological) and 2 (Chemical) Standards (JAN,2020) **#2: Ontario DW Aesthetic and Operational Guidelines (June, 2006)**

TOWN OF CALEDON
PLANNING
RECEIVED
Jul 12, 2021

ALS Environmental

ANALYTICAL GUIDELINE REPORT

2017-646

Sample Details Grouping / Analyte	Result	Qualifier	D.L.	Units	Analyzed	Guideline Limits #1	Guideline Limits #2
L2425657-3 TW3							
Sampled By: AZ on 08-MAR-20							
Matrix: WATER							
Bacteriological Tests							
E. Coli	0		0	CFU/100mL	10-MAR-20	0	
Heterotrophic Plate Count	21		0	CFU/mL	10-MAR-20		
Total Coliform Background	9		0	CFU/100mL	10-MAR-20		
Total Coliforms	0		0	CFU/100mL	10-MAR-20	0	
Total Metals							
Iron (Fe)-Total	4510		50	ug/L	11-MAR-20		*300
Polycyclic Aromatic Hydrocarbons							
Benzo(a)pyrene	<0.0050		0.0050	ug/L	19-MAR-20	0.01	
Surrogate: d14-Terphenyl	91.4		40-130	%	19-MAR-20		
Organochlorine Pesticides							
alpha-Chlordane	<0.10		0.10	ug/L	18-MAR-20		
gamma-Chlordane	<0.10		0.10	ug/L	18-MAR-20		
p,p-DDD	<0.10		0.10	ug/L	18-MAR-20		
p,p-DDE	<0.10		0.10	ug/L	18-MAR-20		
o,p-DDT	<0.10		0.10	ug/L	18-MAR-20		
p,p-DDT	<0.10		0.10	ug/L	18-MAR-20		
Oxychlordane	<0.10		0.10	ug/L	18-MAR-20		
Surrogate: d14-Terphenyl	72.7		40-130	%	18-MAR-20		
Herbicides							
Bromoxynil	<0.20		0.20	ug/L	12-MAR-20	5	
2,4-D	<0.20		0.20	ug/L	12-MAR-20	100	
Dicamba	<0.20		0.20	ug/L	12-MAR-20	120	
Glyphosate	<5.0		5.0	ug/L	13-MAR-20	280	
MCPA	<0.20		0.20	ug/L	12-MAR-20	100	
Picloram	<0.20		0.20	ug/L	12-MAR-20	190	
Surrogate: 2,4-Dichlorophenylacetic Acid	109.0		50-130	%	12-MAR-20		
Pesticides							
Alachlor	<0.10		0.10	ug/L	18-MAR-20	5	
Atrazine	<0.10		0.10	ug/L	18-MAR-20		
Atrazine & Metabolites	<0.20		0.20	ug/L	18-MAR-20	5	
Azinphos-methyl	<0.10		0.10	ug/L	18-MAR-20	20	
Carbaryl	<0.20		0.20	ug/L	18-MAR-20	90	
Carbofuran	<0.20		0.20	ug/L	18-MAR-20	90	
Chlorpyrifos	<0.10		0.10	ug/L	18-MAR-20	90	
Diazinon	<0.10		0.10	ug/L	18-MAR-20	20	
Dimethoate	<0.10		0.10	ug/L	18-MAR-20	20	
Diquat	<1.0		1.0	ug/L	10-MAR-20	70	
Atrazine Desethyl	<0.10		0.10	ug/L	18-MAR-20		
Malathion	<0.10		0.10	ug/L	18-MAR-20	190	
Diclofop-methyl	<0.20		0.20	ug/L	18-MAR-20	9	
Metolachlor	<0.10		0.10	ug/L	18-MAR-20	50	
Metribuzin	<0.10		0.10	ug/L	18-MAR-20	80	
Paraquat	<1.0		1.0	ug/L	10-MAR-20	10	

** Detection Limit for result exceeds Guideline Limit. Assessment against Guideline Limit cannot be made.
* Analytical result for this parameter exceeds Guideline Limit listed on this report. Guideline Limits applied:

Ontario Drinking Water Regulation (ODWQS) JAN.1,2020 = [Suite] - ON-DW-STANDARD+GUIDELINES

#1: Schedule 1 (Microbiological) and 2 (Chemical) Standards (JAN,2020) **#2: Ontario DW Aesthetic and Operational Guidelines (June, 2006)**

TOWN OF CALEDON
PLANNING
RECEIVED
Jul 12, 2021

ALS Environmental

ANALYTICAL GUIDELINE REPORT

2017-646

Sample Details Grouping / Analyte	Result	Qualifier	D.L.	Units	Analyzed	Guideline Limits #1	Guideline Limits #2
L2425657-3 TW3							
Sampled By: AZ on 08-MAR-20							
Matrix: WATER							
Pesticides							
Phorate	<0.10		0.10	ug/L	18-MAR-20	2	
Prometryne	<0.10		0.10	ug/L	18-MAR-20	1	
Simazine	<0.10		0.10	ug/L	18-MAR-20	10	
Terbufos	<0.20		0.20	ug/L	18-MAR-20	1	
Triallate	<0.10		0.10	ug/L	18-MAR-20	230	
Trifluralin	<0.10		0.10	ug/L	18-MAR-20	45	
Surrogate: 2-Fluorobiphenyl	73.2		40-130	%	18-MAR-20		
L2425657-4 TW12							
Sampled By: AZ on 08-MAR-20							
Matrix: WATER						#1	#2
Physical Tests							
Total Dissolved Solids	1670	DLDS	20	mg/L	19-MAR-20		*500
Turbidity	13.8		0.10	NTU	10-MAR-20		*5
Anions and Nutrients							
Nitrate (as N)	<0.10	DLDS	0.10	mg/L	10-MAR-20	10	
Nitrite (as N)	<0.050	DLDS	0.050	mg/L	10-MAR-20	1	
Sulfate (SO4)	991	DLDS	1.5	mg/L	10-MAR-20		*500
Bacteriological Tests							
E. Coli	0		0	CFU/100mL	10-MAR-20	0	
Heterotrophic Plate Count	3		0	CFU/mL	10-MAR-20		
Total Coliform Background	4		0	CFU/100mL	10-MAR-20		
Total Coliforms	0		0	CFU/100mL	10-MAR-20	0	
Total Metals							
Iron (Fe)-Total	2260	DLHC	500	ug/L	11-MAR-20		*300
L2425657-5 DUP-1							
Sampled By: AZ on 08-MAR-20							
Matrix: WATER						#1	#2
Physical Tests							
Total Dissolved Solids	420	DLDS	20	mg/L	19-MAR-20		500
Turbidity	26.7		0.10	NTU	10-MAR-20		*5
Anions and Nutrients							
Nitrate (as N)	0.024		0.020	mg/L	10-MAR-20	10	
Nitrite (as N)	<0.010		0.010	mg/L	10-MAR-20	1	
Sulfate (SO4)	70.8		0.30	mg/L	10-MAR-20		500
Bacteriological Tests							
E. Coli	0		0	CFU/100mL	10-MAR-20	0	
Heterotrophic Plate Count	2		0	CFU/mL	10-MAR-20		
Total Coliform Background	11		0	CFU/100mL	10-MAR-20		
Total Coliforms	0		0	CFU/100m	10-MAR-20	0	

** Detection Limit for result exceeds Guideline Limit. Assessment against Guideline Limit cannot be made.
* Analytical result for this parameter exceeds Guideline Limit listed on this report. Guideline Limits applied:

Ontario Drinking Water Regulation (ODWQS) JAN.1,2020 = [Suite] - ON-DW-STANDARD+GUIDELINES

#1: Schedule 1 (Microbiological) and 2 (Chemical) Standards (JAN,2020) **#2: Ontario DW Aesthetic and Operational Guidelines (June, 2006)**

TOWN OF CALEDON
PLANNING
RECEIVED
Jul 12, 2021

Environmental

ANALYTICAL GUIDELINE REPORT

2017-646

Sample Details Grouping	Analyte	Result	Qualifier	D.L.	Units	Analyzed	Guideline Limits #1	Guideline Limits #2
L2425657-5	DUP-1							
Sampled By:	AZ on 08-MAR-20							
Matrix:	WATER							
Bacteriological Tests					L			
Total Metals								
	Iron (Fe)-Total	4910		50	ug/L	11-MAR-20		*300

** Detection Limit for result exceeds Guideline Limit. Assessment against Guideline Limit cannot be made.
* Analytical result for this parameter exceeds Guideline Limit listed on this report. Guideline Limits applied:

Ontario Drinking Water Regulation (ODWQS) JAN.1,2020 = [Suite] - ON-DW-STANDARD+GUIDELINES

#1: Schedule 1 (Microbiological) and 2 (Chemical) Standards (JAN,2020) **#2: Ontario DW Aesthetic and Operational Guidelines (June, 2006)**

TOWN OF CALEDON
PLANNING
RECEIVED
Jul 12, 2021
2017-645

Reference Information

Sample Parameter Qualifier key listed:

Qualifier	Description
DLDS	Detection Limit Raised: Dilution required due to high Dissolved Solids / Electrical Conductivity.
DLM	Detection Limit Adjusted due to sample matrix effects (e.g. chemical interference, colour, turbidity).
RRA:MD	Result of Repeat Analysis: Missed Dilution
DLHC	Detection Limit Raised: Dilution required due to high concentration of test analyte(s).

Methods Listed (if applicable):

ALS Test Code	Matrix	Test Description	Method Reference***
BAP-ONT-DW-WT	Water	Benzo(a)pyrene in Drinking Water	SW 846 8270
DIQUAT-ONT-DW-WT	Water	Diquat in Water by LC/MS-MS	E3503
		An aliquot of the sample is taken and internal standard is added. The sample is analyzed by LC/MS/MS.	
EC-DW-WT	Water	E. coli	SM 9222D
		A 100 mL volume of sample is filtered through a membrane, the membrane is placed on mFC-BCIG agar and incubated at 44.5 –0 .2 °C for 24 – 2 h. Method ID: WT-TM-1200	
EC-SCREEN-WT	Water	Conductivity Screen (Internal Use Only)	APHA 2510
		Qualitative analysis of conductivity where required during preparation of other tests - e.g. TDS, metals, etc.	
GLYPHOSATE-ONT-DW-WT	Water	Glyphosate in Drinking Water	MOE E3500
		This analysis is carried out using procedures adapted from ON MOE E3500 "Glyphosate". Glyphosate is determined by direct injection by LC-MS/MS on a sample that bas been derivatized.	
HPC-DW-MF-WT	Water	Heterotrophic Plate Count	SM 9215D
		A 1mL volume of sample is filtered through a membrane, the membrane is placed on mHPC agar and incubated for 48–2h@35–0.5°C. Method ID: WT-TM-1200	
MET-ONT-DW-DIG-WT	Water	Metals in Water by ICPMS	EPA 200.8
		This analysis involves preliminary sample treatment by hotblock acid digestion (APHA 3030E). Instrumental analysis is by inductively coupled plasma - mass spectrometry (EPA Method 6020A).	
MISC-ONT-DW-WT	Water	O.Reg 170/03 Miscellaneous Pesticides	SW846 8270
		Pesticides are extracted from an aqueous sample using separate aliquots of solvent, extracts are concentrated down to a certain volume and analyzed on the GC/MSD.	
NO2-DW-IC-WT	Water	Nitrite in Water by IC	EPA 300.1 (mod)
		Inorganic anions are analyzed by Ion Chromatography with conductivity and/or UV detection.	
NO3-DW-IC-WT	Water	Nitrate in Water by IC	EPA 300.1 (mod)
		Inorganic anions are analyzed by Ion Chromatography with conductivity and/or UV detection.	
OCPEST-ONT-DW-WT	Water	O.Reg 170/03 OC Pesticides	SW846 8270
		Pesticides are extracted from an aqueous sample using separate aliquots of solvent, extracts are concentrated and analyzed on the GC/MSD.	
PAHERB-ONT-DW-WT	Water	O.Reg 170/03 PA Herbicides	MOE E3552
		Water samples are analyzed by direct injection without sample preparation using liquid chromatography tandem mass spectrometry (LC-MS/MS).	
PARAQUAT-ONT-DW-WT	Water	Paraquat in Water by LC/MS-MS	E3503
		An aliquot of the sample is taken and internal standard is added. The sample is analyzed by LC/MS/MS.	
SO4-IC-N-ONT-DW-WT	Water	Sulfate in Water by IC	EPA 300.1 (mod)
		Inorganic anions are analyzed by Ion Chromatography with conductivity and/or UV detection.	
SOLIDS-TDS-ONT-DW-WT	Water	Total Dissolved Solids	APHA 2540C
		This analysis is carried out using procedures adapted from APHA Method 2540 "Solids". Solids are determined gravimetrically. Total Dissolved Solids (TDS) are determined by filtering a sample through a glass fibre filter, TDS is determined by evaporating the filtrate to dryness at 180 degrees celsius.	
TC-DW-WT	Water	Total Coliforms	SM 9222B
		A 100mL volume of sample is filtered through a membrane, the membrane is placed on mENDO LES agar and incubated at 35–0.5°C for 24–2h. Method ID: WT-TM-1200	
TCB-DW-WT	Water	Total Coliform Background	SM 9222B
		A 100mL volume of sample is filtered through a membrane, the membrane is placed on mENDO LES agar and incubated at 35–0.5°C for 24–2h. Method ID: WT-TM-1200.	

TOWN OF CALEDON
PLANNING
RECEIVED
Jul 12, 2021

Reference Information

TURB-MET-WT	Water	Turbidity on preserved metals sample	APHA 2130 B

Sample result is based on a comparison of the intensity of the light scattered by the sample under defined conditions with the intensity of light scattered by a standard reference suspension under the same conditions. Sample readings are obtained from a Nephelometer.

TURBIDITY-ONT-DW-WT	Water	Turbidity	APHA 2130 B

Sample result is based on a comparison of the intensity of the light scattered by the sample under defined conditions with the intensity of light scattered by a standard reference suspension under the same conditions. Sample readings are obtained from a Nephelometer.

*** ALS test methods may incorporate modifications from specified reference methods to improve performance.

Chain of Custody numbers:

The last two letters of the above test code(s) indicate the laboratory that performed analytical analysis for that test. Refer to the list below:

Laboratory Definition Code	Laboratory Location	Laboratory Definition Code	Laboratory Location
WT	ALS ENVIRONMENTAL - WATERLOO, ONTARIO, CANADA		

GLOSSARY OF REPORT TERMS

Surrogates are compounds that are similar in behaviour to target analyte(s), but that do not normally occur in environmental samples. For applicable tests, surrogates are added to samples prior to analysis as a check on recovery. In reports that display the D.L. column, laboratory objectives for surrogates are listed there.
mg/kg - milligrams per kilogram based on dry weight of sample
mg/kg wwt - milligrams per kilogram based on wet weight of sample
mg/kg lwt - milligrams per kilogram based on lipid-adjusted weight
mg/L - unit of concentration based on volume, parts per million.
< - Less than.
D.L. - The reporting limit.
N/A - Result not available. Refer to qualifier code and definition for explanation.

Test results reported relate only to the samples as received by the laboratory.
UNLESS OTHERWISE STATED, ALL SAMPLES WERE RECEIVED IN ACCEPTABLE CONDITION.
Analytical results in unsigned test reports with the DRAFT watermark are subject to change, pending final QC review.

Application of guidelines is provided "as is" without warranty of any kind, either expressed or implied, including, but not limited to, fitness for a particular purpose, or non-infringement. ALS assumes no responsibility for errors or omissions in the information. Guideline limits are not adjusted for the hardness, pH or temperature of the sample (the most conservative values are used). Measurement uncertainty is not applied to test results prior to comparison with specified criteria values.

TOWN OF CALEDON
PLANNING
RECEIVED
Jul 12, 2021

Quality Control Report

Workorder: L2425657 Report Date: 20-MAR-20

Client: COLE ENGINEERING GROUP LTD
2620 Bristol Circle #300
Oakville ON L6H 6Z7
Contact: ARON ZHAO

Test	Matrix	Reference	Result	Qualifier	Units	RPD	Limit	Analyzed
BAP-ONT-DW-WT	**Water**							
Batch R5031483								
WG3293919-2 LCS								
Benzo(a)pyrene			74.4		%		60-130	19-MAR-20
WG3293919-1 MB								
Benzo(a)pyrene			<0.0050		ug/L		0.005	19-MAR-20
Surrogate: d14-Terphenyl			92.6		%		40-130	19-MAR-20
DIQUAT-ONT-DW-WT	**Water**							
Batch R5020270								
WG3288546-3 DUP		**WG3288546-5**						
Diquat		<1.0	<1.0	RPD-NA	ug/L	N/A	30	09-MAR-20
WG3288546-2 LCS								
Diquat			100.4		%		70-130	09-MAR-20
WG3288546-1 MB								
Diquat			<1.0		ug/L		1	09-MAR-20
WG3288546-4 MS		**WG3288546-5**						
Diquat			100.0		%		70-130	09-MAR-20
EC-DW-WT	**Water**							
Batch R5021004								
WG3289454-3 DUP		**L2425657-1**						
E. Coli		0	0		CFU/100mL	0.0	50	10-MAR-20
WG3289454-4 DUP		**L2425776-1**						
E. Coli		0	0		CFU/100mL	0.0	50	10-MAR-20
WG3289454-1 MB								
E. Coli			0		CFU/100mL		1	10-MAR-20
GLYPHOSATE-ONT-DW-WT	**Water**							
Batch R5026570								
WG3290481-3 DUP		**WG3290481-5**						
Glyphosate		<5.0	<5.0	RPD-NA	ug/L	N/A	30	14-MAR-20
WG3290481-2 LCS								
Glyphosate			93.6		%		70-130	13-MAR-20
WG3290481-1 MB								
Glyphosate			<5.0		ug/L		5	13-MAR-20
WG3290481-4 MS		**WG3290481-5**						
Glyphosate			97.2		%		70-130	14-MAR-20
HPC-DW-MF-WT	**Water**							

TOWN OF CALEDON
PLANNING
RECEIVED
Jul 12, 2021

Quality Control Report

Workorder: L2425657 Report Date: 20-MAR-20

Client: COLE ENGINEERING GROUP LTD
2620 Bristol Circle #300
Oakville ON L6H 6Z7
Contact: ARON ZHAO

Test	Matrix	Reference	Result	Qualifier	Units	RPD	Limit	Analyzed
HPC-DW-MF-WT	**Water**							
Batch R5021668								
WG3289448-3 DUP		**L2425646-4**						
Heterotrophic Plate Count		0	0		CFU/mL	0.0	65	10-MAR-20
WG3289448-4 DUP		**L2425634-5**						
Heterotrophic Plate Count		0	0		CFU/mL	0.0	65	10-MAR-20
WG3289448-1 MB								
Heterotrophic Plate Count			0		CFU/mL		1	10-MAR-20
MET-ONT-DW-DIG-WT	**Water**							
Batch R5021021								
WG3290068-4 DUP		**WG3290068-3**						
Iron (Fe)-Total		<50	<50	RPD-NA	ug/L	N/A	25	11-MAR-20
WG3290068-2 LCS								
Iron (Fe)-Total			100.7		%		70-130	11-MAR-20
WG3290068-1 MB								
Iron (Fe)-Total			<50		ug/L		50	11-MAR-20
WG3290068-5 MS		**WG3290068-3**						
Iron (Fe)-Total			99.8		%		70-130	11-MAR-20
MISC-ONT-DW-WT	**Water**							
Batch R5029726								
WG3293919-2 LCS								
Alachlor			109.5		%		60-130	18-MAR-20
Atrazine			82.9		%		60-130	18-MAR-20
Atrazine Desethyl			57.9		%		50-130	18-MAR-20
Azinphos-methyl			96.4		%		60-140	18-MAR-20
Carbaryl			117.3		%		50-140	18-MAR-20
Carbofuran			107.2		%		60-140	18-MAR-20
Chlorpyrifos			96.5		%		60-130	18-MAR-20
Diazinon			90.1		%		60-130	18-MAR-20
Diclofop-methyl			93.0		%		60-140	18-MAR-20
Dimethoate			88.7		%		60-130	18-MAR-20
Malathion			90.2		%		60-130	18-MAR-20
Metribuzin			101.3		%		60-130	18-MAR-20
Metolachlor			109.4		%		60-130	18-MAR-20
Phorate			95.2		%		30-140	18-MAR-20
Prometryne			107.1		%		60-130	18-MAR-20
Simazine			97.2		%		60-130	18-MAR-20
Terbufos			91.4		%		60-130	18-MAR-20

TOWN OF CALEDON
PLANNING
RECEIVED
Jul 12, 2021

Quality Control Report

Workorder: L2425657 Report Date: 20-MAR-20

Client: COLE ENGINEERING GROUP LTD
2620 Bristol Circle #300
Oakville ON L6H 6Z7
Contact: ARON ZHAO

Test	Matrix	Reference	Result	Qualifier	Units	RPD	Limit	Analyzed
MISC-ONT-DW-WT	**Water**							
Batch R5029726								
WG3293919-2 LCS								
Triallate			100.7		%		60-130	18-MAR-20
Trifluralin			90.0		%		60-130	18-MAR-20
WG3293919-1 MB								
Alachlor			<0.10		ug/L		0.1	18-MAR-20
Atrazine			<0.10		ug/L		0.1	18-MAR-20
Atrazine Desethyl			<0.10		ug/L		0.1	18-MAR-20
Azinphos-methyl			<0.10		ug/L		0.1	18-MAR-20
Carbaryl			<0.20		ug/L		0.2	18-MAR-20
Carbofuran			<0.20		ug/L		0.2	18-MAR-20
Chlorpyrifos			<0.10		ug/L		0.1	18-MAR-20
Diazinon			<0.10		ug/L		0.1	18-MAR-20
Diclofop-methyl			<0.20		ug/L		0.2	18-MAR-20
Dimethoate			<0.10		ug/L		0.1	18-MAR-20
Malathion			<0.10		ug/L		0.1	18-MAR-20
Metribuzin			<0.10		ug/L		0.1	18-MAR-20
Metolachlor			<0.10		ug/L		0.1	18-MAR-20
Phorate			<0.10		ug/L		0.1	18-MAR-20
Prometryne			<0.10		ug/L		0.1	18-MAR-20
Simazine			<0.10		ug/L		0.1	18-MAR-20
Terbufos			<0.20		ug/L		0.2	18-MAR-20
Triallate			<0.10		ug/L		0.1	18-MAR-20
Trifluralin			<0.10		ug/L		0.1	18-MAR-20
Surrogate: 2-Fluorobiphenyl			87.6		%		40-130	18-MAR-20
NO2-DW-IC-WT	**Water**							
Batch R5021223								
WG3289462-14 DUP		**WG3289462-13**						
Nitrite (as N)		<0.010	<0.010	RPD-NA	mg/L	N/A	20	10-MAR-20
WG3289462-9 DUP		**WG3289462-8**						
Nitrite (as N)		<0.010	<0.010	RPD-NA	mg/L	N/A	20	10-MAR-20
WG3289462-12 LCS								
Nitrite (as N)			100.0		%		90-110	10-MAR-20
WG3289462-7 LCS								
Nitrite (as N)			100.2		%		90-110	10-MAR-20
WG3289462-11 MB								
Nitrite (as N)			<0.010		mg/L		0.01	10-MAR-20

TOWN OF CALEDON
PLANNING
RECEIVED
Jul 12, 2021

Quality Control Report

Client: COLE ENGINEERING GROUP LTD
2620 Bristol Circle #300
Oakville ON L6H 6Z7
Contact: ARON ZHAO

Test	Matrix	Reference	Result	Qualifier	Units	RPD	Limit	Analyzed
NO2-DW-IC-WT	**Water**							
Batch R5021223								
WG3289462-6 MB								
Nitrite (as N)			<0.010		mg/L		0.01	10-MAR-20
WG3289462-10 MS		**WG3289462-8**						
Nitrite (as N)			101.9		%		75-125	10-MAR-20
WG3289462-15 MS		**WG3289462-13**						
Nitrite (as N)			99.9		%		75-125	10-MAR-20
NO3-DW-IC-WT	**Water**							
Batch R5021223								
WG3289462-14 DUP		**WG3289462-13**						
Nitrate (as N)		0.024	0.023		mg/L	4.0	20	10-MAR-20
WG3289462-9 DUP		**WG3289462-8**						
Nitrate (as N)		1.18	1.18		mg/L	0.1	20	10-MAR-20
WG3289462-12 LCS								
Nitrate (as N)			99.8		%		90-110	10-MAR-20
WG3289462-7 LCS								
Nitrate (as N)			99.9		%		90-110	10-MAR-20
WG3289462-11 MB								
Nitrate (as N)			<0.020		mg/L		0.02	10-MAR-20
WG3289462-6 MB								
Nitrate (as N)			<0.020		mg/L		0.02	10-MAR-20
WG3289462-10 MS		**WG3289462-8**						
Nitrate (as N)			100.8		%		75-125	10-MAR-20
WG3289462-15 MS		**WG3289462-13**						
Nitrate (as N)			96.4		%		75-125	10-MAR-20
OCPEST-ONT-DW-WT	**Water**							
Batch R5029887								
WG3293919-2 LCS								
Oxychlordane			72.3		%		50-150	18-MAR-20
gamma-Chlordane			68.8		%		50-150	18-MAR-20
alpha-Chlordane			70.1		%		50-150	18-MAR-20
p,p-DDE			57.1		%		50-150	18-MAR-20
p,p-DDD			63.3		%		50-150	18-MAR-20
p,p-DDT			72.7		%		50-150	18-MAR-20
o,p-DDT			62.8		%		50-150	18-MAR-20
WG3293919-1 MB								
Oxychlordane			<0.10		ug/L		0.1	18-MAR-20
gamma-Chlordane			<0.10		ug/L		0.1	18-MAR-20

TOWN OF CALEDON
PLANNING
RECEIVED
Jul 12, 2021

Quality Control Report

Client: COLE ENGINEERING GROUP LTD
2620 Bristol Circle #300
Oakville ON L6H 6Z7
Contact: ARON ZHAO

Test	Matrix	Reference	Result	Qualifier	Units	RPD	Limit	Analyzed
OCPEST-ONT-DW-WT	**Water**							
Batch R5029887								
WG3293919-1 MB								
alpha-Chlordane			<0.10		ug/L		0.1	18-MAR-20
p,p-DDE			<0.10		ug/L		0.1	18-MAR-20
p,p-DDD			<0.10		ug/L		0.1	18-MAR-20
p,p-DDT			<0.10		ug/L		0.1	18-MAR-20
o,p-DDT			<0.10		ug/L		0.1	18-MAR-20
Surrogate: d14-Terphenyl			73.4		%		40-130	18-MAR-20
PAHERB-ONT-DW-WT	**Water**							
Batch R5021625								
WG3290151-3 DUP		**WG3290151-5**						
Dicamba		<0.20	<0.20	RPD-NA	ug/L	N/A	30	12-MAR-20
Bromoxynil		<0.20	<0.20	RPD-NA	ug/L	N/A	30	12-MAR-20
2,4-D		<0.20	<0.20	RPD-NA	ug/L	N/A	30	12-MAR-20
Picloram		<0.20	<0.20	RPD-NA	ug/L	N/A	30	12-MAR-20
MCPA		<0.20	<0.20	RPD-NA	ug/L	N/A	30	12-MAR-20
WG3290151-2 LCS								
Dicamba			103.5		%		65-130	12-MAR-20
Bromoxynil			95.5		%		65-130	12-MAR-20
2,4-D			98.9		%		65-130	12-MAR-20
Picloram			115.5		%		50-150	12-MAR-20
MCPA			100.0		%		65-130	12-MAR-20
WG3290151-1 MB								
Dicamba			<0.20		ug/L		0.2	12-MAR-20
Bromoxynil			<0.20		ug/L		0.2	12-MAR-20
2,4-D			<0.20		ug/L		0.2	12-MAR-20
Picloram			<0.20		ug/L		0.2	12-MAR-20
MCPA			<0.20		ug/L		0.2	12-MAR-20
Surrogate: 2,4-Dichlorophenylacetic Acid			117.0		%		50-130	12-MAR-20
WG3290151-4 MS		**WG3290151-5**						
Dicamba			87.0		%		50-150	12-MAR-20
Bromoxynil			94.8		%		50-150	12-MAR-20
2,4-D			78.0		%		50-150	12-MAR-20
Picloram			101.8		%		50-150	12-MAR-20
MCPA			79.1		%		50-150	12-MAR-20
PARAQUAT-ONT-DW-WT	**Water**							

TOWN OF CALEDON
PLANNING
RECEIVED
Jul 12, 2021

Quality Control Report

Workorder: L2425657 Report Date: 20-MAR-20

Client: COLE ENGINEERING GROUP LTD
2620 Bristol Circle #300
Oakville ON L6H 6Z7
Contact: ARON ZHAO

Test	Matrix	Reference	Result	Qualifier	Units	RPD	Limit	Analyzed
PARAQUAT-ONT-DW-WT	**Water**							
Batch R5020270								
WG3288546-3 DUP		**WG3288546-5**						
Paraquat		<1.0	<1.0	RPD-NA	ug/L	N/A	30	09-MAR-20
WG3288546-2 LCS								
Paraquat			107.6		%		70-130	09-MAR-20
WG3288546-1 MB								
Paraquat			<1.0		ug/L		1	09-MAR-20
WG3288546-4 MS		**WG3288546-5**						
Paraquat			86.8		%		70-130	09-MAR-20
SO4-IC-N-ONT-DW-WT	**Water**							
Batch R5021223								
WG3289462-14 DUP		**WG3289462-13**						
Sulfate (SO4)		70.7	70.8		mg/L	0.1	20	10-MAR-20
WG3289462-9 DUP		**WG3289462-8**						
Sulfate (SO4)		6.30	6.29		mg/L	0.1	20	10-MAR-20
WG3289462-12 LCS								
Sulfate (SO4)			101.5		%		90-110	10-MAR-20
WG3289462-7 LCS								
Sulfate (SO4)			101.7		%		90-110	10-MAR-20
WG3289462-11 MB								
Sulfate (SO4)			<0.30		mg/L		0.3	10-MAR-20
WG3289462-6 MB								
Sulfate (SO4)			<0.30		mg/L		0.3	10-MAR-20
WG3289462-10 MS		**WG3289462-8**						
Sulfate (SO4)			103.5		%		75-125	10-MAR-20
WG3289462-15 MS		**WG3289462-13**						
Sulfate (SO4)			101.1		%		75-125	10-MAR-20
SOLIDS-TDS-ONT-DW-WT	**Water**							
Batch R5033000								
WG3294507-3 DUP		**L2425657-1**						
Total Dissolved Solids		413	434		mg/L	5.0	25	19-MAR-20
WG3294507-2 LCS								
Total Dissolved Solids			102.3		%		70-130	19-MAR-20
WG3294507-1 MB								
Total Dissolved Solids			<10		mg/L		10	19-MAR-20
TC-DW-WT	**Water**							

TOWN OF CALEDON
PLANNING
RECEIVED
Jul 12, 2021

Quality Control Report

Client: COLE ENGINEERING GROUP LTD
2620 Bristol Circle #300
Oakville ON L6H 6Z7
Contact: ARON ZHAO

Test	Matrix	Reference	Result	Qualifier	Units	RPD	Limit	Analyzed
TC-DW-WT	**Water**							
Batch R5021012								
WG3289455-3 DUP		**L2425776-4**						
Total Coliforms		0	<10	RPD-NA	CFU/100mL	N/A	50	10-MAR-20
WG3289455-4 DUP		**L2425776-2**						
Total Coliforms		0	<10	RPD-NA	CFU/100mL	N/A	50	10-MAR-20
WG3289455-1 MB								
Total Coliforms			0		CFU/100mL		1	10-MAR-20
Batch R5025046								
WG3290633-1 MB								
Total Coliforms			0		CFU/100mL		1	11-MAR-20
TCB-DW-WT	**Water**							
Batch R5021012								
WG3289455-3 DUP		**L2425776-4**						
Total Coliform Background		10	9		CFU/100mL	11	50	10-MAR-20
WG3289455-4 DUP		**L2425776-2**						
Total Coliform Background		30	6	DUP-H,J	CFU/100mL	24	20	10-MAR-20
WG3289455-1 MB								
Total Coliform Background			0		CFU/100mL		1	10-MAR-20
Batch R5025046								
WG3290633-1 MB								
Total Coliform Background			0		CFU/100mL		1	11-MAR-20
TURBIDITY-ONT-DW-WT	**Water**							
Batch R5020266								
WG3289353-3 DUP		**L2425657-2**						
Turbidity		66.4	69.6		NTU	4.7	15	10-MAR-20
WG3289353-2 LCS								
Turbidity			102.5		%		85-115	10-MAR-20
WG3289353-1 MB								
Turbidity			<0.10		NTU		0.1	10-MAR-20

TOWN OF CALEDON
PLANNING
RECEIVED
Jul 12, 2021

Quality Control Report

Workorder: L2425657 Report Date: 20-MAR-20

Client: COLE ENGINEERING GROUP LTD
2620 Bristol Circle #300
Oakville ON L6H 6Z7

Contact: ARON ZHAO

Legend:

Limit	ALS Control Limit (Data Quality Objectives)
DUP	Duplicate
RPD	Relative Percent Difference
N/A	Not Available
LCS	Laboratory Control Sample
SRM	Standard Reference Material
MS	Matrix Spike
MSD	Matrix Spike Duplicate
ADE	Average Desorption Efficiency
MB	Method Blank
IRM	Internal Reference Material
CRM	Certified Reference Material
CCV	Continuing Calibration Verification
CVS	Calibration Verification Standard
LCSD	Laboratory Control Sample Duplicate

Sample Parameter Qualifier Definitions:

Qualifier	Description
DUP-H,J	Duplicate results outside ALS DQO, due to sample heterogeneity. Duplicate results and limits are expressed in terms of absolute difference.
RPD-NA	Relative Percent Difference Not Available due to result(s) being less than detection limit.

Hold Time Exceedances:

All test results reported with this submission were conducted within ALS recommended hold times.

ALS recommended hold times may vary by province. They are assigned to meet known provincial and/or federal government requirements. In the absence of regulatory hold times, ALS establishes recommendations based on guidelines published by the US EPA, APHA Standard Methods, or Environment Canada (where available). For more information, please contact ALS.

The ALS Quality Control Report is provided to ALS clients upon request. ALS includes comprehensive QC checks with every analysis to ensure our high standards of quality are met. Each QC result has a known or expected target value, which is compared against pre-determined data quality objectives to provide confidence in the accuracy of associated test results.

Please note that this report may contain QC results from anonymous Sample Duplicates and Matrix Spikes that do not originate from this Work Order.

TOWN OF CALEDON
PLANNING
RECEIVED
Jul 12, 2021

Chain of Custody (COC) / Analytical Request Form

www.alsglobal.com

Canada Toll Free: 1 800 668 9878

L2425657-COFC

COC Number: 17 -

Page 1 of 1

Report To	Contact and company name below will appear on the final report
Company:	COLE ENGINEERING GROUP LTD
Contact:	Aron Zhao
Phone:	905-940-6161
	Company address below will appear on the final report
Street:	2620 Bristol Circle #300
City/Province:	Oakville
Postal Code:	L6H 6Z7
Invoice To	Same as Report To ☐ YES ☑ NO
	Copy of Invoice with Report ☑ YES ☐ NO
Company:	Cole Engineering Group Ltd - AP
Contact:	cole.ap@coleengineering.ca

Project Information

ALS Account # / Quote #:	Q78185 - MW Sampling
Job #:	2017-646
PO / AFE:	
LSD:	

ALS Lab Work Order # (lab use only): L2425657 PO

Report Format / Distribution

Select Report Format: ☑ PDF ☑ EXCEL ☐ EDD (DIGITAL)

Quality Control (QC) Report with Report ☐ YES ☑ NO

☑ Compare Results to Criteria on Report - provide details below if box checked

Select Distribution: ☑ EMAIL ☐ MAIL ☐ FAX

Email 1 or Fax azhao@coleengineering.ca

Email 2 sdavies@c...

Email 3

Invoice Distribution

Select Invoice Distribution: ☑ EMAIL ☐ MAIL ☐ FAX

Email 1 or Fax azhao@coleengineering.ca

Email 2 cole.ap@coleengineering.ca

Oil and Gas Required Fields (client use)

AFE/Cost Center:	PO#
Major/Minor Code:	Routing Code:
Requisitioner:	
Location:	

ALS Contact: Emily Smith **Sampler:** A.Z.

Select Service Level Below - Contact your AM to confirm all E&P TATs (surcharges may apply)

Regular [R] ☑ Standard TAT if received by 3 pm - business days - no surcharges apply

PRIORITY (Business Days): 4 day [P4-20%] ☐ | 3 day [P3-25%] ☐ | 2 day [P2-50%] ☐

EMERGENCY: 1 Business day [E - 100%] ☐ | Same Day, Weekend or Statutory holiday [E2 -200% (Laboratory opening fees may apply)] ☐

Date and Time Required for all E&P TATs: dd-mmm-yy hh:mm

For tests that can not be performed according to the service level selected, you will be contacted.

Analysis Request

Indicate Filtered (F), Preserved (P) or Filtered and Preserved (F/P) below

ALS Sample # (lab use only)	Sample Identification and/or Coordinates (This description will appear on the report)	Date (dd-mmm-yy)	Time (hh:mm)	Sample Type	NUMBER OF CONTAINERS	TC, EC, HPC, TCB	NO2/NO3	Diquat	Paraquat	Glyphosate	Turbidity	Sulphate	Total Iron	TDS	OC Pesticides	OP Pesticides	Misc Pesticides	Herbicides	SAMPLES ON HOLD	SUSPECTED HAZARD (see Special Instructions)
	TW1	Mar 8, 2020	am.	GW	10	✓	✓	✓	✓	✓	✓	✓	✓	✓	✓	✓	✓	✓		
	TW2				4	✓	✓				✓	✓	✓	✓						
	TW3		pm.		10	✓	✓	✓	✓	✓	✓	✓	✓	✓	✓	✓	✓	✓		
	~~TW4~~				~~4~~															
	~~TW5~~				~~4~~															
	TW12		p.m		4	✓	✓				✓	✓	✓	✓						
	DUP-1		—		4	✓	✓				✓	✓	✓	✓						

Drinking Water (DW) Samples[1] (client use)

Are samples taken from a Regulated DW System? ☐ YES ☑ NO

Are samples for human consumption/ use? ☑ YES ☐ NO

Special Instructions / Specify Criteria to add on report by clicking on the drop-down list below (electronic COC only)

ODWS

SAMPLE CONDITION AS RECEIVED (lab use only)

Frozen ☐ SIF Observations Yes ☐ No ☐

Ice Packs ☐ Ice Cubes ☐ Custody seal intact Yes ☐ No ☐

Cooling Initiated ☐

INITIAL COOLER TEMPERATURES °C				FINAL COOLER TEMPERATURES °C			
4.9				3.8			

SHIPMENT RELEASE (client use)

Released by:	Date:	Time:
	Mar 8	19:22

INITIAL SHIPMENT RECEPTION (lab use only)

Received by:	Date:	Time:
	9/3/20	8:50

FINAL SHIPMENT RECEPTION (lab use only)

Received by:	Date:	Time:
	09-MAR-20	1440

REFER TO BACK PAGE FOR ALS LOCATIONS AND SAMPLING INFORMATION

WHITE - LABORATORY COPY YELLOW - CLIENT COPY

NOV 2018 FRONT

Failure to complete all portions of this form may delay analysis. Please fill in this form LEGIBLY. By the use of this form the user acknowledges and agrees with the Terms and Conditions as specified on the back page of the white - report copy.

1. If any water samples are taken from a **Regulated Drinking Water (DW) System**, please submit using an **Authorized DW COC form**.

TOWN OF CALEDON
PLANNING
RECEIVED
Jul 12, 2021

COLE ENGINEERING GROUP LTD
ATTN: ARON ZHAO
2620 Bristol Circle #300
Oakville ON L6H 6Z7

Date Received: 11-MAR-20
Report Date: 17-MAR-20 12:27 (MT)
Version: FINAL

Client Phone: 905-940-6161

Certificate of Analysis

Lab Work Order #: L2426891

Project P.O. #: NOT SUBMITTED
Job Reference: 2017-646
C of C Numbers:
Legal Site Desc:

Emily Smith
Account Manager

[This report shall not be reproduced except in full without the written authority of the Laboratory.]

TOWN OF CALEDON
PLANNING
RECEIVED
Jul 12, 2021

Summary of Guideline Exceedances

ALS ID	Client ID	Grouping	Analyte	Result	Guideline Limit	Unit
Guideline						
Ontario Drinking Water Regulation (ODWQS) JAN.1,2020 - Schedule 1 (Microbiological) and 2 (Chemical) Standards (JAN,2020)						
L2426891-2	TW10	Bacteriological Tests	Total Coliforms	1	0	CFU/100mL
Ontario Drinking Water Regulation (ODWQS) JAN.1,2020 - Ontario DW Aesthetic and Operational Guidelines (June, 2006)						
L2426891-2	TW10	Total Metals	Iron (Fe)-Total	1210	300	ug/L

* Please refer to the Reference Information section for an explanation of any qualifiers noted.

TOWN OF CALEDON
PLANNING
RECEIVED
Jul 12, 2021

Physical Tests - WATER

Analyte	Unit	Guide Limits #1	Guide Limits #2	Lab ID: L2426891-1	Lab ID: L2426891-2
				Sample Date: 11-MAR-20	Sample Date: 11-MAR-20
				Sample ID: TW4	Sample ID: TW10
Total Dissolved Solids	mg/L	-	500	302 DLDS	41 DLDS
Turbidity	NTU	-	5	0.28	3.33

Guide Limit #1: Schedule 1 (Microbiological) and 2 (Chemical) Standards (JAN,2020)
Guide Limit #2: Ontario DW Aesthetic and Operational Guidelines (June, 2006)

Detection Limit for result exceeds Guideline Limit. Assessment against Guideline Limit cannot be made.
Analytical result for this parameter exceeds Guide Limits listed. See Summary of Guideline Exceedances.

* Please refer to the Reference Information section for an explanation of any qualifiers noted.

TOWN OF CALEDON
PLANNING
RECEIVED
Jul 12, 2021

Anions and Nutrients - WATER

		Guide Limits			
Lab ID				L2426891-1	L2426891-2
Sample Date				11-MAR-20	11-MAR-20
Sample ID				TW4	TW10
Analyte	**Unit**	**#1**	**#2**		
Nitrate (as N)	mg/L	10	-	2.26	<0.020
Nitrite (as N)	mg/L	1	-	<0.010	<0.010
Sulfate (SO4)	mg/L	-	500	14.9	<0.30

Guide Limit #1: Schedule 1 (Microbiological) and 2 (Chemical) Standards (JAN,2020)
Guide Limit #2: Ontario DW Aesthetic and Operational Guidelines (June, 2006)

Detection Limit for result exceeds Guideline Limit. Assessment against Guideline Limit cannot be made.
Analytical result for this parameter exceeds Guide Limits listed. See Summary of Guideline Exceedances.

* Please refer to the Reference Information section for an explanation of any qualifiers noted.

TOWN OF CALEDON
PLANNING
RECEIVED
Jul 12, 2021

Bacteriological Tests - WATER

Analyte	Unit	Guide Limits #1	Guide Limits #2	Lab ID: L2426891-1 / Sample Date: 11-MAR-20 / Sample ID: TW4	Lab ID: L2426891-2 / Sample Date: 11-MAR-20 / Sample ID: TW10
E. Coli	CFU/100mL	0	-	0	0
Heterotrophic Plate Count	CFU/mL	-	-	5	18
Total Coliform Background	CFU/100mL	-	-	14	6
Total Coliforms	CFU/100mL	0	-	0	1

Guide Limit #1: Schedule 1 (Microbiological) and 2 (Chemical) Standards (JAN,2020)
Guide Limit #2: Ontario DW Aesthetic and Operational Guidelines (June, 2006)

Detection Limit for result exceeds Guideline Limit. Assessment against Guideline Limit cannot be made.
Analytical result for this parameter exceeds Guide Limits listed. See Summary of Guideline Exceedances.

* Please refer to the Reference Information section for an explanation of any qualifiers noted.

TOWN OF CALEDON
PLANNING
RECEIVED
Jul 12, 2021

Total Metals - WATER

Analyte	Unit	Guide Limits #1	Guide Limits #2	Lab ID: L2426891-1 Sample Date: 11-MAR-20 Sample ID: TW4	Lab ID: L2426891-2 Sample Date: 11-MAR-20 Sample ID: TW10
Iron (Fe)	ug/L	-	300	<50	
Iron (Fe)-Total	ug/L	-	300		1210

Guide Limit #1: Schedule 1 (Microbiological) and 2 (Chemical) Standards (JAN,2020)
Guide Limit #2: Ontario DW Aesthetic and Operational Guidelines (June, 2006)

Detection Limit for result exceeds Guideline Limit. Assessment against Guideline Limit cannot be made.
Analytical result for this parameter exceeds Guide Limits listed. See Summary of Guideline Exceedances.

TOWN OF CALEDON
PLANNING
RECEIVED
Jul 12, 2021

Reference Information

Qualifiers for Individual Parameters Listed:

Qualifier	Description
DLDS	Detection Limit Raised: Dilution required due to high Dissolved Solids / Electrical Conductivity.

Methods Listed (if applicable):

ALS Test Code	Matrix	Test Description	Method Reference**
EC-MF-DW-WT	Water	E. coli	SM 9222D
A 100 mL volume of sample is filtered through a membrane, the membrane is placed on mFC-BCIG agar and incubated at 44.5 –0 .2 °C for 24 – 2 h. Method ID: WT-TM-1200			
EC-SCREEN-WT	Water	Conductivity Screen (Internal Use Only)	APHA 2510
Qualitative analysis of conductivity where required during preparation of other tests - e.g. TDS, metals, etc.			
HPC-DW-MF-WT	Water	Heterotrophic Plate Count	SM 9215D
A 1mL volume of sample is filtered through a membrane, the membrane is placed on mHPC agar and incubated for 48–2h@35–0.5°C. Method ID: WT-TM-1200			
MET-ONT-DW-DIG-WT	Water	Metals in Water by ICPMS	EPA 200.8
This analysis involves preliminary sample treatment by hotblock acid digestion (APHA 3030E). Instrumental analysis is by inductively coupled plasma - mass spectrometry (EPA Method 6020A).			
MET-ONT-DW-WT	Water	Drinking Water Metals	EPA 6020A
NO2-DW-IC-WT	Water	Nitrite in Water by IC	EPA 300.1 (mod)
Inorganic anions are analyzed by Ion Chromatography with conductivity and/or UV detection.			
NO3-DW-IC-WT	Water	Nitrate in Water by IC	EPA 300.1 (mod)
Inorganic anions are analyzed by Ion Chromatography with conductivity and/or UV detection.			
SO4-IC-N-ONT-DW-WT	Water	Sulfate in Water by IC	EPA 300.1 (mod)
Inorganic anions are analyzed by Ion Chromatography with conductivity and/or UV detection.			
SOLIDS-TDS-ONT-DW-WT	Water	Total Dissolved Solids	APHA 2540C
This analysis is carried out using procedures adapted from APHA Method 2540 "Solids". Solids are determined gravimetrically. Total Dissolved Solids (TDS) are determined by filtering a sample through a glass fibre filter, TDS is determined by evaporating the filtrate to dryness at 180 degrees celsius.			
TC-MF-DW-WT	Water	Total Coliforms	SM 9222B
A 100mL volume of sample is filtered through a membrane, the membrane is placed on mENDO LES agar and incubated at 35–0.5°C for 24–2h. Method ID: WT-TM-1200			
TCB-MF-DW-WT	Water	Total Coliform Background	SM 9222B
A 100mL volume of sample is filtered through a membrane, the membrane is placed on mENDO LES agar and incubated at 35–0.5°C for 24–2h. Method ID: WT-TM-1200.			
TURB-MET-WT	Water	Turbidity on preserved metals sample	APHA 2130 B
Sample result is based on a comparison of the intensity of the light scattered by the sample under defined conditions with the intensity of light scattered by a standard reference suspension under the same conditions. Sample readings are obtained from a Nephelometer.			
TURBIDITY-ONT-DW-WT	Water	Turbidity	APHA 2130 B

TOWN OF CALEDON
PLANNING
RECEIVED

Jul 12, 2021

Reference Information

~~Methods Listed~~ (if applicable):

ALS Test Code	Matrix	Test Description	Method Reference**

Sample result is based on a comparison of the intensity of the light scattered by the sample under defined conditions with the intensity of light scattered by a standard reference suspension under the same conditions. Sample readings are obtained from a Nephelometer.

**ALS test methods may incorporate modifications from specified reference methods to improve performance.

Chain of Custody Numbers:

The last two letters of the above test code(s) indicate the laboratory that performed analytical analysis for that test. Refer to the list below:

Laboratory Definition Code	Laboratory Location
WT	ALS ENVIRONMENTAL - WATERLOO, ONTARIO, CANADA

GLOSSARY OF REPORT TERMS

Surrogates are compounds that are similar in behaviour to target analyte(s), but that do not normally occur in environmental samples. For applicable tests, surrogates are added to samples prior to analysis as a check on recovery. In reports that display the D.L. column, laboratory objectives for surrogates are listed there.
mg/kg - milligrams per kilogram based on dry weight of sample
mg/kg wwt - milligrams per kilogram based on wet weight of sample
mg/kg lwt - milligrams per kilogram based on lipid-adjusted weight
mg/L - unit of concentration based on volume, parts per million.
< - Less than.
D.L. - The reporting limit.
N/A - Result not available. Refer to qualifier code and definition for explanation.

Test results reported relate only to the samples as received by the laboratory.
UNLESS OTHERWISE STATED, ALL SAMPLES WERE RECEIVED IN ACCEPTABLE CONDITION.
Analytical results in unsigned test reports with the DRAFT watermark are subject to change, pending final QC review.

Application of guidelines is provided "as is" without warranty of any kind, either expressed or implied, including, but not limited to, fitness for a particular purpose, or non-infringement. ALS assumes no responsibility for errors or omissions in the information. Guideline limits are not adjusted for the hardness, pH or temperature of the sample (the most conservative values are used). Measurement uncertainty is not applied to test results prior to comparison with specified criteria values.

TOWN OF CALEDON
PLANNING
RECEIVED
Jul 12, 2021

Quality Control Report

Workorder: L2426891 Report Date: 17-MAR-20

Client: COLE ENGINEERING GROUP LTD
2620 Bristol Circle #300
Oakville ON L6H 6Z7
Contact: ARON ZHAO

Test	Matrix	Reference	Result	Qualifier	Units	RPD	Limit	Analyzed
EC-MF-DW-WT	**Water**							
Batch R5024278								
WG3291141-1 MB								
E. Coli			0		CFU/100mL		1	12-MAR-20
HPC-DW-MF-WT	**Water**							
Batch R5025877								
WG3291134-3 DUP		**L2426686-2**						
Heterotrophic Plate Count		3	2		CFU/mL	40	65	12-MAR-20
WG3291134-1 MB								
Heterotrophic Plate Count			0		CFU/mL		1	12-MAR-20
MET-ONT-DW-DIG-WT	**Water**							
Batch R5022347								
WG3291025-4 DUP		**WG3291025-3**						
Iron (Fe)-Total		1610	1790		ug/L	10	25	12-MAR-20
WG3291025-2 LCS								
Iron (Fe)-Total			102.0		%		70-130	12-MAR-20
WG3291025-1 MB								
Iron (Fe)-Total			<50		ug/L		50	12-MAR-20
WG3291025-5 MS		**WG3291025-6**						
Iron (Fe)-Total			N/A	MS-B	%		-	12-MAR-20
MET-ONT-DW-WT	**Water**							
Batch R5023648								
WG3291080-4 DUP		**WG3291080-3**						
Iron (Fe)		<50	<50	RPD-NA	ug/L	N/A	25	12-MAR-20
WG3291080-2 LCS								
Iron (Fe)			92.6		%		70-130	12-MAR-20
WG3291080-1 MB								
Iron (Fe)			<50		ug/L		50	12-MAR-20
WG3291080-5 MS		**WG3291080-6**						
Iron (Fe)			89.8		%		70-130	12-MAR-20
NO2-DW-IC-WT	**Water**							
Batch R5027802								
WG3291780-4 DUP		**WG3291780-3**						
Nitrite (as N)		<0.010	<0.010	RPD-NA	mg/L	N/A	20	13-MAR-20
WG3291780-2 LCS								
Nitrite (as N)			100.3		%		90-110	13-MAR-20
WG3291780-1 MB								
Nitrite (as N)			<0.010		mg/L		0.01	13-MAR-20

TOWN OF CALEDON
PLANNING
RECEIVED
Jul 12, 2021

Quality Control Report

Workorder: L2426891 Report Date: 17-MAR-20

Client: COLE ENGINEERING GROUP LTD
2620 Bristol Circle #300
Oakville ON L6H 6Z7
Contact: ARON ZHAO

Test	Matrix	Reference	Result	Qualifier	Units	RPD	Limit	Analyzed
NO2-DW-IC-WT	**Water**							
Batch R5027802								
WG3291780-5 MS		**WG3291780-3**						
Nitrite (as N)			100.6		%		75-125	13-MAR-20
NO3-DW-IC-WT	**Water**							
Batch R5027802								
WG3291780-4 DUP		**WG3291780-3**						
Nitrate (as N)		<0.020	<0.020	RPD-NA	mg/L	N/A	20	13-MAR-20
WG3291780-2 LCS								
Nitrate (as N)			100.5		%		90-110	13-MAR-20
WG3291780-1 MB								
Nitrate (as N)			<0.020		mg/L		0.02	13-MAR-20
WG3291780-5 MS		**WG3291780-3**						
Nitrate (as N)			95.5		%		75-125	13-MAR-20
SO4-IC-N-ONT-DW-WT	**Water**							
Batch R5027802								
WG3291780-4 DUP		**WG3291780-3**						
Sulfate (SO4)		65.7	65.6		mg/L	0.1	20	13-MAR-20
WG3291780-2 LCS								
Sulfate (SO4)			102.0		%		90-110	13-MAR-20
WG3291780-1 MB								
Sulfate (SO4)			<0.30		mg/L		0.3	13-MAR-20
WG3291780-5 MS		**WG3291780-3**						
Sulfate (SO4)			102.7		%		75-125	13-MAR-20
SOLIDS-TDS-ONT-DW-WT	**Water**							
Batch R5028144								
WG3293183-3 DUP		**L2426686-1**						
Total Dissolved Solids		368	361		mg/L	1.9	25	16-MAR-20
WG3293183-2 LCS								
Total Dissolved Solids			105.1		%		70-130	16-MAR-20
WG3293183-1 MB								
Total Dissolved Solids			<10		mg/L		10	16-MAR-20
TC-MF-DW-WT	**Water**							
Batch R5024288								
WG3291136-1 MB								
Total Coliforms			0		CFU/100mL		1	12-MAR-20
TCB-MF-DW-WT	**Water**							

TOWN OF CALEDON
PLANNING
RECEIVED
Jul 12, 2021

Quality Control Report

Workorder: L2426891 Report Date: 17-MAR-20

Client: COLE ENGINEERING GROUP LTD
2620 Bristol Circle #300
Oakville ON L6H 6Z7
Contact: ARON ZHAO

Test	Matrix	Reference	Result	Qualifier	Units	RPD	Limit	Analyzed
TCB-MF-DW-WT	**Water**							
Batch R5024288								
WG3291136-1 MB								
Total Coliform Background			0		CFU/100mL		1	12-MAR-20
TURBIDITY-ONT-DW-WT	**Water**							
Batch R5021580								
WG3290971-3 DUP		**L2426629-6**						
Turbidity		86.3	86.8		NTU	0.6	15	12-MAR-20
WG3290971-2 LCS								
Turbidity			105.0		%		85-115	12-MAR-20
WG3290971-1 MB								
Turbidity			<0.10		NTU		0.1	12-MAR-20

TOWN OF CALEDON
PLANNING
RECEIVED
Jul 12, 2021

Quality Control Report

Workorder: L2426891 Report Date: 17-MAR-20

Client: COLE ENGINEERING GROUP LTD
2620 Bristol Circle #300
Oakville ON L6H 6Z7
Contact: ARON ZHAO

Legend:

Limit	ALS Control Limit (Data Quality Objectives)
DUP	Duplicate
RPD	Relative Percent Difference
N/A	Not Available
LCS	Laboratory Control Sample
SRM	Standard Reference Material
MS	Matrix Spike
MSD	Matrix Spike Duplicate
ADE	Average Desorption Efficiency
MB	Method Blank
IRM	Internal Reference Material
CRM	Certified Reference Material
CCV	Continuing Calibration Verification
CVS	Calibration Verification Standard
LCSD	Laboratory Control Sample Duplicate

Sample Parameter Qualifier Definitions:

Qualifier	Description
MS-B	Matrix Spike recovery could not be accurately calculated due to high analyte background in sample.
RPD-NA	Relative Percent Difference Not Available due to result(s) being less than detection limit.

Hold Time Exceedances:

All test results reported with this submission were conducted within ALS recommended hold times.

ALS recommended hold times may vary by province. They are assigned to meet known provincial and/or federal government requirements. In the absence of regulatory hold times, ALS establishes recommendations based on guidelines published by the US EPA, APHA Standard Methods, or Environment Canada (where available). For more information, please contact ALS.

The ALS Quality Control Report is provided to ALS clients upon request. ALS includes comprehensive QC checks with every analysis to ensure our high standards of quality are met. Each QC result has a known or expected target value, which is compared against pre-determined data quality objectives to provide confidence in the accuracy of associated test results.

Please note that this report may contain QC results from anonymous Sample Duplicates and Matrix Spikes that do not originate from this Work Order.

TOWN OF CALEDON
PLANNING
RECEIVED
Jul 12, 2021

Chain of Custody (COC) / Analytical Request Form

L2426891-COFC

COC Number: 17 -

Page 1 of 1

www.alsglobal.com

Canada Toll Free: 1 800 668 9878

Report To	Contact and company name below will appear on the final report
Company:	COLE ENGINEERING GROUP LTD
Contact:	Aron Zhao
Phone:	905-940-6161
	Company address below will appear on the final report
Street:	2620 Bristol Circle #300
City/Province:	Oakville
Postal Code:	L6H 6Z7

Report Format / Distribution	
Select Report Format:	☑ PDF ☑ EXCEL ☐ EDD (DIGITAL)
Quality Control (QC) Report with Report	☐ YES ☐ NO
☑ Compare Results to Criteria on Report - provide details below if box checked	
Select Distribution:	☑ EMAIL ☐ MAIL ☐ FAX
Email 1 or Fax	azhao@coleengineering.ca
Email 2	Sdavies @
Email 3	

Invoice To		
	Same as Report To	☐ YES ☑ NO
	Copy of Invoice with Report	☑ YES ☐ NO
Company:	Cole Engineering Group Ltd - AP	
Contact:	cole.ap@coleengineering.ca	

Invoice Distribution	
Select Invoice Distribution:	☑ EMAIL ☐ MAIL ☐ FAX
Email 1 or Fax	azhao@coleengineering.ca
Email 2	cole.ap@coleengineering.ca

Project Information	
ALS Account # / Quote #:	Q78188 - Domestic Well Sampling
Job #:	2017-646
PO / AFE:	
LSD:	

Oil and Gas Required Fields (client use)	
AFE/Cost Center:	PO#
Major/Minor Code:	Routing Code:
Requisitioner:	
Location:	

ALS Lab Work Order # (lab use only): L2426891 R0

ALS Contact: Emily Smith

Sampler: A.Z.

Select Service Level Below - Contact your AM to confirm all E&P TATs (surcharges may apply)

Regular [R] ☑ Standard TAT if received by 3 pm - business days - no surcharges apply

PRIORITY (Business Days): 4 day [P4-20%] ☐ | 3 day [P3-25%] ☐ | 2 day [P2-50%] ☐

EMERGENCY: 1 Business day [E - 100%] ☐ | Same Day, Weekend or Statutory holiday [E2 -200% (Laboratory opening fees may apply)] ☐

Date and Time Required for all E&P TATs: dd-mmm-yy hh:mm

For tests that can not be performed according to the service level selected, you will be contacted.

Analysis Request

Indicate Filtered (F), Preserved (P) or Filtered and Preserved (F/P) below

ALS Sample # (lab use only)	Sample Identification and/or Coordinates (This description will appear on the report)	Date (dd-mmm-yy)	Time (hh:mm)	Sample Type	NUMBER OF CONTAINERS	TC, EC, HPC, TCB	NO2/NO3	Diquat	Paraquat	Glyphosate	Turbidity	Sulphate	Total Iron	TDS	SAMPLES ON HOLD	SUSPECTED HAZARD (see Special Instructions)
	TW4	Mar 11/2020	a.m.	GW	4	✓	✓				✓	✓	✓	✓		
	TW10	↓	↓	↓	4	✓	✓				✓	✓	✓	✓		

Drinking Water (DW) Samples[1] (client use)

Are samples taken from a Regulated DW System? ☐ YES ☑ NO

Are samples for human consumption/ use? ☑ YES ☐ NO

Special Instructions / Specify Criteria to add on report by clicking on the drop-down list below (electronic COC only)

ODWS

SAMPLE CONDITION AS RECEIVED (lab use only)

Frozen ☐ | SIF Observations Yes ☐ No ☐

Ice Packs ☐ Ice Cubes ☒ | Custody seal intact Yes ☐ No ☐

Cooling Initiated ☐

INITIAL COOLER TEMPERATURES °C	FINAL COOLER TEMPERATURES °C
4.9	-3.4

SHIPMENT RELEASE (client use)		
Released by: AZhao	Date: Mar 11, 2020	Time: 3:25

INITIAL SHIPMENT RECEPTION (lab use only)		
Received by: FM	Date: Mar 11/20	Time: 15:24

FINAL SHIPMENT RECEPTION (lab use only)		
Received by:	Date: MAR 11 20	Time: 18:00

REFER TO BACK PAGE FOR ALS LOCATIONS AND SAMPLING INFORMATION

WHITE - LABORATORY COPY YELLOW - CLIENT COPY

NOV 2018 FRONT

Failure to complete all portions of this form may delay analysis. Please fill in this form LEGIBLY. By the use of this form the user acknowledges and agrees with the Terms and Conditions as specified on the back page of the white - report copy.

1. If any water samples are taken from a **Regulated Drinking Water (DW) System**, please submit using an **Authorized DW COC form**

TOWN OF CALEDON
PLANNING
RECEIVED
Jul 12, 2021

COLE ENGINEERING GROUP LTD
ATTN: ARON ZHAO
2620 Bristol Circle #300
Oakville ON L6H 6Z7

Date Received: 11-MAR-20
Report Date: 20-MAR-20 11:50 (MT)
Version: FINAL

Client Phone: 905-940-6161

Certificate of Analysis

Lab Work Order #: L2426686

Project P.O. #: NOT SUBMITTED
Job Reference: 2017-646
C of C Numbers:
Legal Site Desc:

Emily Smith
Account Manager

[This report shall not be reproduced except in full without the written authority of the Laboratory.]

TOWN OF CALEDON
PLANNING
RECEIVED
Jul 12, 2021

ALS Environmental

ANALYTICAL GUIDELINE REPORT

2017-646

Sample Details Grouping / Analyte	Result	Qualifier	D.L.	Units	Analyzed	Guideline Limits #1	Guideline Limits #2
L2426686-1 TW5							
Sampled By: AZ on 10-MAR-20							
Matrix: WATER							
Physical Tests							
Total Dissolved Solids	368	DLDS	20	mg/L	16-MAR-20		500
Turbidity	1.17		0.10	NTU	12-MAR-20		5
Anions and Nutrients							
Nitrate (as N)	8.42		0.020	mg/L	12-MAR-20	10	
Nitrite (as N)	<0.010		0.010	mg/L	12-MAR-20	1	
Sulfate (SO4)	16.5		0.30	mg/L	12-MAR-20		500
Bacteriological Tests							
E. Coli	0		0	CFU/100mL	12-MAR-20	0	
Heterotrophic Plate Count	6		0	CFU/mL	12-MAR-20		
Total Coliform Background	34		0	CFU/100mL	12-MAR-20		
Total Coliforms	38		0	CFU/100mL	12-MAR-20	*0	
Total Metals							
Iron (Fe)	<50		50	ug/L	12-MAR-20		300
L2426686-2 TW11							
Sampled By: AZ on 10-MAR-20							
Matrix: WATER							
Physical Tests							
Total Dissolved Solids	314	DLDS	20	mg/L	16-MAR-20		500
Turbidity	5.13		0.10	NTU	12-MAR-20		*5
Anions and Nutrients							
Nitrate (as N)	2.72		0.020	mg/L	12-MAR-20	10	
Nitrite (as N)	<0.010		0.010	mg/L	12-MAR-20	1	
Sulfate (SO4)	15.2		0.30	mg/L	12-MAR-20		500
Bacteriological Tests							
E. Coli	0		0	CFU/100mL	12-MAR-20	0	
Heterotrophic Plate Count	3		0	CFU/mL	12-MAR-20		
Total Coliform Background	1		0	CFU/100mL	12-MAR-20		
Total Coliforms	0		0	CFU/100mL	12-MAR-20	0	
Total Metals							
Iron (Fe)-Total	1610		50	ug/L	12-MAR-20		*300
L2426686-3 TW8							
Sampled By: AZ on 10-MAR-20							
Matrix: WATER							
Physical Tests							
Total Dissolved Solids	346	DLDS	20	mg/L	16-MAR-20		500
Turbidity	14.7		0.10	NTU	12-MAR-20		*5
Anions and Nutrients							
Nitrate (as N)	5.05		0.020	mg/L	12-MAR-20	10	

** Detection Limit for result exceeds Guideline Limit. Assessment against Guideline Limit cannot be made.
* Analytical result for this parameter exceeds Guideline Limit listed on this report. Guideline Limits applied:

Ontario Drinking Water Regulation (ODWQS) JAN.1,2020 = [Suite] - ON-DW-STANDARD+GUIDELINES

#1: Schedule 1 (Microbiological) and 2 (Chemical) Standards (JAN,2020) **#2: Ontario DW Aesthetic and Operational Guidelines (June, 2006)**

TOWN OF CALEDON
PLANNING
RECEIVED
Jul 12, 2021

Environmental

ANALYTICAL GUIDELINE REPORT

2017-646

Sample Details Grouping	Analyte	Result	Qualifier	D.L.	Units	Analyzed	Guideline Limits #1	Guideline Limits #2
L2426686-3	TW8							
Sampled By:	AZ on 10-MAR-20							
Matrix:	WATER							
Anions and Nutrients								
	Nitrite (as N)	<0.010		0.010	mg/L	12-MAR-20	1	
	Sulfate (SO4)	32.9		0.30	mg/L	12-MAR-20		500
Bacteriological Tests								
	E. Coli	0		0	CFU/100mL	12-MAR-20	0	
	Heterotrophic Plate Count	13		0	CFU/mL	12-MAR-20		
	Total Coliform Background	38		0	CFU/100mL	12-MAR-20		
	Total Coliforms	7		0	CFU/100mL	12-MAR-20	*0	
Total Metals								
	Iron (Fe)-Total	1180		50	ug/L	12-MAR-20		*300
Polycyclic Aromatic Hydrocarbons								
	Benzo(a)pyrene	<0.0050		0.0050	ug/L	19-MAR-20	0.01	
	Surrogate: d14-Terphenyl	94.3		40-130	%	19-MAR-20		
Organochlorine Pesticides								
	alpha-Chlordane	<0.10		0.10	ug/L	18-MAR-20		
	gamma-Chlordane	<0.10		0.10	ug/L	18-MAR-20		
	p,p-DDD	<0.10		0.10	ug/L	18-MAR-20		
	p,p-DDE	<0.10		0.10	ug/L	18-MAR-20		
	o,p-DDT	<0.10		0.10	ug/L	18-MAR-20		
	p,p-DDT	<0.10		0.10	ug/L	18-MAR-20		
	Oxychlordane	<0.10		0.10	ug/L	18-MAR-20		
	Surrogate: d14-Terphenyl	72.9		40-130	%	18-MAR-20		
Herbicides								
	Bromoxynil	<0.20		0.20	ug/L	12-MAR-20	5	
	2,4-D	<0.20		0.20	ug/L	12-MAR-20	100	
	Dicamba	<0.20		0.20	ug/L	12-MAR-20	120	
	Glyphosate	<5.0		5.0	ug/L	14-MAR-20	280	
	MCPA	<0.20		0.20	ug/L	12-MAR-20	100	
	Picloram	<0.20		0.20	ug/L	12-MAR-20	190	
	Surrogate: 2,4-Dichlorophenylacetic Acid	106.0		50-130	%	12-MAR-20		
Pesticides								
	Alachlor	<0.10		0.10	ug/L	18-MAR-20	5	
	Atrazine	<0.10		0.10	ug/L	18-MAR-20		
	Atrazine & Metabolites	<0.20		0.20	ug/L	18-MAR-20	5	
	Azinphos-methyl	<0.10		0.10	ug/L	18-MAR-20	20	
	Carbaryl	<0.20		0.20	ug/L	18-MAR-20	90	
	Carbofuran	<0.20		0.20	ug/L	18-MAR-20	90	
	Chlorpyrifos	<0.10		0.10	ug/L	18-MAR-20	90	
	Diazinon	<0.10		0.10	ug/L	18-MAR-20	20	
	Dimethoate	<0.10		0.10	ug/L	18-MAR-20	20	
	Diquat	<1.0		1.0	ug/L	17-MAR-20	70	
	Atrazine Desethyl	<0.10		0.10	ug/L	18-MAR-20		
	Malathion	<0.10		0.10	ug/L	18-MAR-20	190	
	Diclofop-methyl	<0.20		0.20	ug/L	18-MAR-20	9	

** Detection Limit for result exceeds Guideline Limit. Assessment against Guideline Limit cannot be made.
* Analytical result for this parameter exceeds Guideline Limit listed on this report. Guideline Limits applied:

Ontario Drinking Water Regulation (ODWQS) JAN.1,2020 = [Suite] - ON-DW-STANDARD+GUIDELINES

#1: Schedule 1 (Microbiological) and 2 (Chemical) Standards (JAN,2020) **#2: Ontario DW Aesthetic and Operational Guidelines (June, 2006)**

TOWN OF CALEDON
PLANNING
RECEIVED
Jul 12, 2021

Environmental

ANALYTICAL GUIDELINE REPORT

2017-646

Sample Details Grouping	Analyte	Result	Qualifier	D.L.	Units	Analyzed	Guideline Limits #1	Guideline Limits #2		
L2426686-3	TW8									
Sampled By:	AZ on 10-MAR-20									
Matrix:	WATER									
Pesticides										
	Metolachlor	<0.10		0.10	ug/L	18-MAR-20	50			
	Metribuzin	<0.10		0.10	ug/L	18-MAR-20	80			
	Paraquat	<1.0		1.0	ug/L	17-MAR-20	10			
	Phorate	<0.10		0.10	ug/L	18-MAR-20	2			
	Prometryne	<0.10		0.10	ug/L	18-MAR-20	1			
	Simazine	<0.10		0.10	ug/L	18-MAR-20	10			
	Terbufos	<0.20		0.20	ug/L	18-MAR-20	1			
	Triallate	<0.10		0.10	ug/L	18-MAR-20	230			
	Trifluralin	<0.10		0.10	ug/L	18-MAR-20	45			
	Surrogate: 2-Fluorobiphenyl	74.1		40-130	%	18-MAR-20				

** Detection Limit for result exceeds Guideline Limit. Assessment against Guideline Limit cannot be made.
* Analytical result for this parameter exceeds Guideline Limit listed on this report. Guideline Limits applied:

Ontario Drinking Water Regulation (ODWQS) JAN.1,2020 = [Suite] - ON-DW-STANDARD+GUIDELINES

#1: Schedule 1 (Microbiological) and 2 (Chemical) Standards (JAN,2020) **#2: Ontario DW Aesthetic and Operational Guidelines (June, 2006)**

TOWN OF CALEDON
PLANNING
RECEIVED
Jul 12, 2021

Reference Information

Sample Parameter Qualifier key listed:

Qualifier	Description
DLDS	Detection Limit Raised: Dilution required due to high Dissolved Solids / Electrical Conductivity.

Methods Listed (if applicable):

ALS Test Code	Matrix	Test Description	Method Reference***
BAP-ONT-DW-WT	Water	Benzo(a)pyrene in Drinking Water	SW 846 8270
DIQUAT-ONT-DW-WT	Water	Diquat in Water by LC/MS-MS	E3503
		An aliquot of the sample is taken and internal standard is added. The sample is analyzed by LC/MS/MS.	
EC-MF-DW-WT	Water	E. coli	SM 9222D
		A 100 mL volume of sample is filtered through a membrane, the membrane is placed on mFC-BCIG agar and incubated at 44.5 –0 .2 °C for 24 – 2 h. Method ID: WT-TM-1200	
EC-SCREEN-WT	Water	Conductivity Screen (Internal Use Only)	APHA 2510
		Qualitative analysis of conductivity where required during preparation of other tests - e.g. TDS, metals, etc.	
GLYPHOSATE-ONT-DW-WT	Water	Glyphosate in Drinking Water	MOE E3500
		This analysis is carried out using procedures adapted from ON MOE E3500 "Glyphosate". Glyphosate is determined by direct injection by LC-MS/MS on a sample that bas been derivatized.	
HPC-DW-MF-WT	Water	Heterotrophic Plate Count	SM 9215D
		A 1mL volume of sample is filtered through a membrane, the membrane is placed on mHPC agar and incubated for 48–2h@35–0.5°C. Method ID: WT-TM-1200	
MET-ONT-DW-DIG-WT	Water	Metals in Water by ICPMS	EPA 200.8
		This analysis involves preliminary sample treatment by hotblock acid digestion (APHA 3030E). Instrumental analysis is by inductively coupled plasma - mass spectrometry (EPA Method 6020A).	
MET-ONT-DW-WT	Water	Drinking Water Metals	EPA 6020A
MISC-ONT-DW-WT	Water	O.Reg 170/03 Miscellaneous Pesticides	SW846 8270
		Pesticides are extracted from an aqueous sample using separate aliquots of solvent, extracts are concentrated down to a certain volume and analyzed on the GC/MSD.	
NO2-DW-IC-WT	Water	Nitrite in Water by IC	EPA 300.1 (mod)
		Inorganic anions are analyzed by Ion Chromatography with conductivity and/or UV detection.	
NO3-DW-IC-WT	Water	Nitrate in Water by IC	EPA 300.1 (mod)
		Inorganic anions are analyzed by Ion Chromatography with conductivity and/or UV detection.	
OCPEST-ONT-DW-WT	Water	O.Reg 170/03 OC Pesticides	SW846 8270
		Pesticides are extracted from an aqueous sample using separate aliquots of solvent, extracts are concentrated and analyzed on the GC/MSD.	
PAHERB-ONT-DW-WT	Water	O.Reg 170/03 PA Herbicides	MOE E3552
		Water samples are analyzed by direct injection without sample preparation using liquid chromatography tandem mass spectrometry (LC-MS/MS).	
PARAQUAT-ONT-DW-WT	Water	Paraquat in Water by LC/MS-MS	E3503
		An aliquot of the sample is taken and internal standard is added. The sample is analyzed by LC/MS/MS.	
SO4-IC-N-ONT-DW-WT	Water	Sulfate in Water by IC	EPA 300.1 (mod)
		Inorganic anions are analyzed by Ion Chromatography with conductivity and/or UV detection.	
SOLIDS-TDS-ONT-DW-WT	Water	Total Dissolved Solids	APHA 2540C
		This analysis is carried out using procedures adapted from APHA Method 2540 "Solids". Solids are determined gravimetrically. Total Dissolved Solids (TDS) are determined by filtering a sample through a glass fibre filter, TDS is determined by evaporating the filtrate to dryness at 180 degrees celsius.	
TC-MF-DW-WT	Water	Total Coliforms	SM 9222B
		A 100mL volume of sample is filtered through a membrane, the membrane is placed on mENDO LES agar and incubated at 35–0.5°C for 24–2h. Method ID: WT-TM-1200	
TCB-MF-DW-WT	Water	Total Coliform Background	SM 9222B
		A 100mL volume of sample is filtered through a membrane, the membrane is placed on mENDO LES agar and incubated at 35–0.5°C for 24–2h. Method ID: WT-TM-1200.	

TOWN OF CALEDON
PLANNING
RECEIVED
Jul 12, 2021

Reference Information

TURB-MET-WT	Water	Turbidity on preserved metals sample	APHA 2130 B

Sample result is based on a comparison of the intensity of the light scattered by the sample under defined conditions with the intensity of light scattered by a standard reference suspension under the same conditions. Sample readings are obtained from a Nephelometer.

TURBIDITY-ONT-DW-WT	Water	Turbidity	APHA 2130 B

Sample result is based on a comparison of the intensity of the light scattered by the sample under defined conditions with the intensity of light scattered by a standard reference suspension under the same conditions. Sample readings are obtained from a Nephelometer.

*** ALS test methods may incorporate modifications from specified reference methods to improve performance.

Chain of Custody numbers:

The last two letters of the above test code(s) indicate the laboratory that performed analytical analysis for that test. Refer to the list below:

Laboratory Definition Code	Laboratory Location	Laboratory Definition Code	Laboratory Location
WT	ALS ENVIRONMENTAL - WATERLOO, ONTARIO, CANADA		

GLOSSARY OF REPORT TERMS

Surrogates are compounds that are similar in behaviour to target analyte(s), but that do not normally occur in environmental samples. For applicable tests, surrogates are added to samples prior to analysis as a check on recovery. In reports that display the D.L. column, laboratory objectives for surrogates are listed there.
mg/kg - milligrams per kilogram based on dry weight of sample
mg/kg wwt - milligrams per kilogram based on wet weight of sample
mg/kg lwt - milligrams per kilogram based on lipid-adjusted weight
mg/L - unit of concentration based on volume, parts per million.
< - Less than.
D.L. - The reporting limit.
N/A - Result not available. Refer to qualifier code and definition for explanation.

Test results reported relate only to the samples as received by the laboratory.
UNLESS OTHERWISE STATED, ALL SAMPLES WERE RECEIVED IN ACCEPTABLE CONDITION.
Analytical results in unsigned test reports with the DRAFT watermark are subject to change, pending final QC review.

Application of guidelines is provided "as is" without warranty of any kind, either expressed or implied, including, but not limited to, fitness for a particular purpose, or non-infringement. ALS assumes no responsibility for errors or omissions in the information. Guideline limits are not adjusted for the hardness, pH or temperature of the sample (the most conservative values are used). Measurement uncertainty is not applied to test results prior to comparison with specified criteria values.

TOWN OF CALEDON
PLANNING
RECEIVED
Jul 12, 2021

Quality Control Report

Workorder: L2426686 Report Date: 20-MAR-20

Client: COLE ENGINEERING GROUP LTD
2620 Bristol Circle #300
Oakville ON L6H 6Z7
Contact: ARON ZHAO

Test	Matrix	Reference	Result	Qualifier	Units	RPD	Limit	Analyzed
BAP-ONT-DW-WT	**Water**							
Batch R5031483								
WG3293919-2 LCS								
Benzo(a)pyrene			74.4		%		60-130	19-MAR-20
WG3293919-1 MB								
Benzo(a)pyrene			<0.0050		ug/L		0.005	19-MAR-20
Surrogate: d14-Terphenyl			92.6		%		40-130	19-MAR-20
DIQUAT-ONT-DW-WT	**Water**							
Batch R5028084								
WG3293056-3 DUP		**WG3293056-5**						
Diquat		<1.0	<1.0	RPD-NA	ug/L	N/A	30	17-MAR-20
WG3293056-2 LCS								
Diquat			94.4		%		70-130	17-MAR-20
WG3293056-1 MB								
Diquat			<1.0		ug/L		1	17-MAR-20
WG3293056-4 MS		**WG3293056-5**						
Diquat			102.4		%		70-130	17-MAR-20
EC-MF-DW-WT	**Water**							
Batch R5024278								
WG3291141-1 MB								
E. Coli			0		CFU/100mL		1	12-MAR-20
GLYPHOSATE-ONT-DW-WT	**Water**							
Batch R5026570								
WG3290481-3 DUP		**WG3290481-5**						
Glyphosate		<5.0	<5.0	RPD-NA	ug/L	N/A	30	14-MAR-20
WG3290481-2 LCS								
Glyphosate			93.6		%		70-130	13-MAR-20
WG3290481-1 MB								
Glyphosate			<5.0		ug/L		5	13-MAR-20
WG3290481-4 MS		**WG3290481-5**						
Glyphosate			97.2		%		70-130	14-MAR-20
HPC-DW-MF-WT	**Water**							
Batch R5025877								
WG3291134-3 DUP		**L2426686-2**						
Heterotrophic Plate Count		3	2		CFU/mL	40	65	12-MAR-20
WG3291134-1 MB								
Heterotrophic Plate Count			0		CFU/mL		1	12-MAR-20
MET-ONT-DW-DIG-WT	**Water**							

TOWN OF CALEDON
PLANNING
RECEIVED
Jul 12, 2021

Quality Control Report

Client: COLE ENGINEERING GROUP LTD
2620 Bristol Circle #300
Oakville ON L6H 6Z7
Contact: ARON ZHAO

Test	Matrix	Reference	Result	Qualifier	Units	RPD	Limit	Analyzed
MET-ONT-DW-DIG-WT	**Water**							
Batch R5022347								
WG3291025-4 DUP		**WG3291025-3**						
Iron (Fe)-Total		1610	1790		ug/L	10	25	12-MAR-20
WG3291025-2 LCS								
Iron (Fe)-Total			102.0		%		70-130	12-MAR-20
WG3291025-1 MB								
Iron (Fe)-Total			<50		ug/L		50	12-MAR-20
WG3291025-5 MS		**WG3291025-6**						
Iron (Fe)-Total			N/A	MS-B	%		-	12-MAR-20
MET-ONT-DW-WT	**Water**							
Batch R5023648								
WG3291080-4 DUP		**WG3291080-3**						
Iron (Fe)		<50	<50	RPD-NA	ug/L	N/A	25	12-MAR-20
WG3291080-2 LCS								
Iron (Fe)			92.6		%		70-130	12-MAR-20
WG3291080-1 MB								
Iron (Fe)			<50		ug/L		50	12-MAR-20
WG3291080-5 MS		**WG3291080-6**						
Iron (Fe)			89.8		%		70-130	12-MAR-20
MISC-ONT-DW-WT	**Water**							
Batch R5029726								
WG3293919-2 LCS								
Alachlor			109.5		%		60-130	18-MAR-20
Atrazine			82.9		%		60-130	18-MAR-20
Atrazine Desethyl			57.9		%		50-130	18-MAR-20
Azinphos-methyl			96.4		%		60-140	18-MAR-20
Carbaryl			117.3		%		50-140	18-MAR-20
Carbofuran			107.2		%		60-140	18-MAR-20
Chlorpyrifos			96.5		%		60-130	18-MAR-20
Diazinon			90.1		%		60-130	18-MAR-20
Diclofop-methyl			93.0		%		60-140	18-MAR-20
Dimethoate			88.7		%		60-130	18-MAR-20
Malathion			90.2		%		60-130	18-MAR-20
Metribuzin			101.3		%		60-130	18-MAR-20
Metolachlor			109.4		%		60-130	18-MAR-20
Phorate			95.2		%		30-140	18-MAR-20
Prometryne			107.1		%		60-130	18-MAR-20

TOWN OF CALEDON
PLANNING
RECEIVED
Jul 12, 2021

Quality Control Report

Client: COLE ENGINEERING GROUP LTD
2620 Bristol Circle #300
Oakville ON L6H 6Z7
Contact: ARON ZHAO

Test	Matrix	Reference	Result	Qualifier	Units	RPD	Limit	Analyzed
MISC-ONT-DW-WT	**Water**							
Batch R5029726								
WG3293919-2 LCS								
Simazine			97.2		%		60-130	18-MAR-20
Terbufos			91.4		%		60-130	18-MAR-20
Triallate			100.7		%		60-130	18-MAR-20
Trifluralin			90.0		%		60-130	18-MAR-20
WG3293919-1 MB								
Alachlor			<0.10		ug/L		0.1	18-MAR-20
Atrazine			<0.10		ug/L		0.1	18-MAR-20
Atrazine Desethyl			<0.10		ug/L		0.1	18-MAR-20
Azinphos-methyl			<0.10		ug/L		0.1	18-MAR-20
Carbaryl			<0.20		ug/L		0.2	18-MAR-20
Carbofuran			<0.20		ug/L		0.2	18-MAR-20
Chlorpyrifos			<0.10		ug/L		0.1	18-MAR-20
Diazinon			<0.10		ug/L		0.1	18-MAR-20
Diclofop-methyl			<0.20		ug/L		0.2	18-MAR-20
Dimethoate			<0.10		ug/L		0.1	18-MAR-20
Malathion			<0.10		ug/L		0.1	18-MAR-20
Metribuzin			<0.10		ug/L		0.1	18-MAR-20
Metolachlor			<0.10		ug/L		0.1	18-MAR-20
Phorate			<0.10		ug/L		0.1	18-MAR-20
Prometryne			<0.10		ug/L		0.1	18-MAR-20
Simazine			<0.10		ug/L		0.1	18-MAR-20
Terbufos			<0.20		ug/L		0.2	18-MAR-20
Triallate			<0.10		ug/L		0.1	18-MAR-20
Trifluralin			<0.10		ug/L		0.1	18-MAR-20
Surrogate: 2-Fluorobiphenyl			87.6		%		40-130	18-MAR-20
NO2-DW-IC-WT	**Water**							
Batch R5024749								
WG3291070-20 DUP		**WG3291070-18**						
Nitrite (as N)		<0.010	<0.010	RPD-NA	mg/L	N/A	20	12-MAR-20
WG3291070-17 LCS								
Nitrite (as N)			99.5		%		90-110	12-MAR-20
WG3291070-16 MB								
Nitrite (as N)			<0.010		mg/L		0.01	12-MAR-20
WG3291070-19 MS		**WG3291070-18**						

TOWN OF CALEDON
PLANNING
RECEIVED
Jul 12, 2021

Quality Control Report

Client: COLE ENGINEERING GROUP LTD
2620 Bristol Circle #300
Oakville ON L6H 6Z7
Contact: ARON ZHAO

Test	Matrix	Reference	Result	Qualifier	Units	RPD	Limit	Analyzed
NO2-DW-IC-WT	**Water**							
Batch R5024749								
WG3291070-19 MS		**WG3291070-18**						
Nitrite (as N)			103.9		%		75-125	12-MAR-20
NO3-DW-IC-WT	**Water**							
Batch R5024749								
WG3291070-20 DUP		**WG3291070-18**						
Nitrate (as N)		0.543	0.543		mg/L	0.1	20	12-MAR-20
WG3291070-17 LCS								
Nitrate (as N)			100.7		%		90-110	12-MAR-20
WG3291070-16 MB								
Nitrate (as N)			<0.020		mg/L		0.02	12-MAR-20
WG3291070-19 MS		**WG3291070-18**						
Nitrate (as N)			102.0		%		75-125	12-MAR-20
OCPEST-ONT-DW-WT	**Water**							
Batch R5029887								
WG3293919-2 LCS								
Oxychlordane			72.3		%		50-150	18-MAR-20
gamma-Chlordane			68.8		%		50-150	18-MAR-20
alpha-Chlordane			70.1		%		50-150	18-MAR-20
p,p-DDE			57.1		%		50-150	18-MAR-20
p,p-DDD			63.3		%		50-150	18-MAR-20
p,p-DDT			72.7		%		50-150	18-MAR-20
o,p-DDT			62.8		%		50-150	18-MAR-20
WG3293919-1 MB								
Oxychlordane			<0.10		ug/L		0.1	18-MAR-20
gamma-Chlordane			<0.10		ug/L		0.1	18-MAR-20
alpha-Chlordane			<0.10		ug/L		0.1	18-MAR-20
p,p-DDE			<0.10		ug/L		0.1	18-MAR-20
p,p-DDD			<0.10		ug/L		0.1	18-MAR-20
p,p-DDT			<0.10		ug/L		0.1	18-MAR-20
o,p-DDT			<0.10		ug/L		0.1	18-MAR-20
Surrogate: d14-Terphenyl			73.4		%		40-130	18-MAR-20
PAHERB-ONT-DW-WT	**Water**							

TOWN OF CALEDON
PLANNING
RECEIVED
Jul 12, 2021

Quality Control Report

Client: COLE ENGINEERING GROUP LTD
2620 Bristol Circle #300
Oakville ON L6H 6Z7
Contact: ARON ZHAO

Test	Matrix	Reference	Result	Qualifier	Units	RPD	Limit	Analyzed
PAHERB-ONT-DW-WT	**Water**							
Batch R5021625								
WG3290151-3 DUP		**WG3290151-5**						
Dicamba		<0.20	<0.20	RPD-NA	ug/L	N/A	30	12-MAR-20
Bromoxynil		<0.20	<0.20	RPD-NA	ug/L	N/A	30	12-MAR-20
2,4-D		<0.20	<0.20	RPD-NA	ug/L	N/A	30	12-MAR-20
Picloram		<0.20	<0.20	RPD-NA	ug/L	N/A	30	12-MAR-20
MCPA		<0.20	<0.20	RPD-NA	ug/L	N/A	30	12-MAR-20
WG3290151-2 LCS								
Dicamba			103.5		%		65-130	12-MAR-20
Bromoxynil			95.5		%		65-130	12-MAR-20
2,4-D			98.9		%		65-130	12-MAR-20
Picloram			115.5		%		50-150	12-MAR-20
MCPA			100.0		%		65-130	12-MAR-20
WG3290151-1 MB								
Dicamba			<0.20		ug/L		0.2	12-MAR-20
Bromoxynil			<0.20		ug/L		0.2	12-MAR-20
2,4-D			<0.20		ug/L		0.2	12-MAR-20
Picloram			<0.20		ug/L		0.2	12-MAR-20
MCPA			<0.20		ug/L		0.2	12-MAR-20
Surrogate: 2,4-Dichlorophenylacetic Acid			117.0		%		50-130	12-MAR-20
WG3290151-4 MS		**WG3290151-5**						
Dicamba			87.0		%		50-150	12-MAR-20
Bromoxynil			94.8		%		50-150	12-MAR-20
2,4-D			78.0		%		50-150	12-MAR-20
Picloram			101.8		%		50-150	12-MAR-20
MCPA			79.1		%		50-150	12-MAR-20
PARAQUAT-ONT-DW-WT	**Water**							
Batch R5028084								
WG3293056-3 DUP		**WG3293056-5**						
Paraquat		<1.0	<1.0	RPD-NA	ug/L	N/A	30	17-MAR-20
WG3293056-2 LCS								
Paraquat			111.6		%		70-130	17-MAR-20
WG3293056-1 MB								
Paraquat			<1.0		ug/L		1	17-MAR-20
WG3293056-4 MS		**WG3293056-5**						
Paraquat			85.6		%		70-130	17-MAR-20
SO4-IC-N-ONT-DW-WT	**Water**							

TOWN OF CALEDON
PLANNING
RECEIVED
Jul 12, 2021

Quality Control Report

Workorder: L2426686 Report Date: 20-MAR-20

Client: COLE ENGINEERING GROUP LTD
2620 Bristol Circle #300
Oakville ON L6H 6Z7
Contact: ARON ZHAO

Test	Matrix	Reference	Result	Qualifier	Units	RPD	Limit	Analyzed
SO4-IC-N-ONT-DW-WT	**Water**							
Batch R5024749								
WG3291070-20 DUP		**WG3291070-18**						
Sulfate (SO4)		6.19	6.20		mg/L	0.2	20	12-MAR-20
WG3291070-17 LCS								
Sulfate (SO4)			101.7		%		90-110	12-MAR-20
WG3291070-16 MB								
Sulfate (SO4)			<0.30		mg/L		0.3	12-MAR-20
WG3291070-19 MS		**WG3291070-18**						
Sulfate (SO4)			103.4		%		75-125	12-MAR-20
SOLIDS-TDS-ONT-DW-WT	**Water**							
Batch R5028144								
WG3293183-3 DUP		**L2426686-1**						
Total Dissolved Solids		368	361		mg/L	1.9	25	16-MAR-20
WG3293183-2 LCS								
Total Dissolved Solids			105.1		%		70-130	16-MAR-20
WG3293183-1 MB								
Total Dissolved Solids			<10		mg/L		10	16-MAR-20
TC-MF-DW-WT	**Water**							
Batch R5024288								
WG3291136-1 MB								
Total Coliforms			0		CFU/100mL		1	12-MAR-20
TCB-MF-DW-WT	**Water**							
Batch R5024288								
WG3291136-1 MB								
Total Coliform Background			0		CFU/100mL		1	12-MAR-20
TURBIDITY-ONT-DW-WT	**Water**							
Batch R5021580								
WG3290971-3 DUP		**L2426629-6**						
Turbidity		86.3	86.8		NTU	0.6	15	12-MAR-20
WG3290971-2 LCS								
Turbidity			105.0		%		85-115	12-MAR-20
WG3290971-1 MB								
Turbidity			<0.10		NTU		0.1	12-MAR-20

TOWN OF CALEDON
PLANNING
RECEIVED
Jul 12, 2021

Quality Control Report

Workorder: L2426686 Report Date: 20-MAR-20

Client: COLE ENGINEERING GROUP LTD
2620 Bristol Circle #300
Oakville ON L6H 6Z7
Contact: ARON ZHAO

Legend:

Limit	ALS Control Limit (Data Quality Objectives)
DUP	Duplicate
RPD	Relative Percent Difference
N/A	Not Available
LCS	Laboratory Control Sample
SRM	Standard Reference Material
MS	Matrix Spike
MSD	Matrix Spike Duplicate
ADE	Average Desorption Efficiency
MB	Method Blank
IRM	Internal Reference Material
CRM	Certified Reference Material
CCV	Continuing Calibration Verification
CVS	Calibration Verification Standard
LCSD	Laboratory Control Sample Duplicate

Sample Parameter Qualifier Definitions:

Qualifier	Description
MS-B	Matrix Spike recovery could not be accurately calculated due to high analyte background in sample.
RPD-NA	Relative Percent Difference Not Available due to result(s) being less than detection limit.

Hold Time Exceedances:

All test results reported with this submission were conducted within ALS recommended hold times.

ALS recommended hold times may vary by province. They are assigned to meet known provincial and/or federal government requirements. In the absence of regulatory hold times, ALS establishes recommendations based on guidelines published by the US EPA, APHA Standard Methods, or Environment Canada (where available). For more information, please contact ALS.

The ALS Quality Control Report is provided to ALS clients upon request. ALS includes comprehensive QC checks with every analysis to ensure our high standards of quality are met. Each QC result has a known or expected target value, which is compared against pre-determined data quality objectives to provide confidence in the accuracy of associated test results.

Please note that this report may contain QC results from anonymous Sample Duplicates and Matrix Spikes that do not originate from this Work Order.

TOWN OF CALEDON
PLANNING
RECEIVED
Jul 12, 2021

Chain of Custody (COC) / Analy Request Form

L2426686-COFC

COC Number: 17 -

Page 1 of 1

ALS www.alsglobal.com

Canada Toll Free: 1 800 668 9878

Report To	Contact and company name below will appear on the final report
Company:	COLE ENGINEERING GROUP LTD
Contact:	Aron Zhao
Phone:	905-940-6161
	Company address below will appear on the final report
Street:	2620 Bristol Circle #300
City/Province:	Oakville
Postal Code:	L6H 6Z7

Report Format / Distribution	
Select Report Format:	☑ PDF ☑ EXCEL ☐ EDD (DIGITAL)
Quality Control (QC) Report with Report	☐ YES ☐ NO
☑ Compare Results to Criteria on Report - provide details below if box checked	
Select Distribution:	☑ EMAIL ☐ MAIL ☐ FAX
Email 1 or Fax	azhao@coleengineering.ca
Email 2	sdavies@...
Email 3	

Invoice To		
	Same as Report To	☐ YES ☑ NO
	Copy of Invoice with Report	☑ YES ☐ NO
Company:	Cole Engineering Group Ltd - AP	
Contact:	cole.ap@coleengineering.ca	

Invoice Distribution	
Select Invoice Distribution:	☑ EMAIL ☐ MAIL ☐ FAX
Email 1 or Fax	azhao@coleengineering.ca
Email 2	cole.ap@coleengineering.ca

Project Information	
ALS Account # / Quote #:	Q78185 - MW Sampling
Job #:	2017-646
PO / AFE:	
LSD:	

Oil and Gas Required Fields (client use)	
AFE/Cost Center:	PO#
Major/Minor Code:	Routing Code:
Requisitioner:	
Location:	

ALS Lab Work Order # (lab use only): L2426686 RD

ALS Contact: Emily Smith

Sampler: A.Z.

Select Service Level Below - Contact your AM to confirm all E&P TATs (surcharges may apply)

Regular [R] ☑ Standard TAT if received by 3 pm - business days - no surcharges apply

PRIORITY (Business Days): 4 day [P4-20%] ☐ | 3 day [P3-25%] ☐ | 2 day [P2-50%] ☐

EMERGENCY: 1 Business day [E - 100%] ☐ | Same Day, Weekend or Statutory holiday [E2 -200% (Laboratory opening fees may apply)] ☐

Date and Time Required for all E&P TATs: dd-mmm-yy hh:mm

For tests that can not be performed according to the service level selected, you will be contacted.

Analysis Request

Indicate Filtered (F), Preserved (P) or Filtered and Preserved (F/P) below

ALS Sample # (lab use only)	Sample Identification and/or Coordinates (This description will appear on the report)	Date (dd-mmm-yy)	Time (hh:mm)	Sample Type	NUMBER OF CONTAINERS	TC, EC, HPC, TCB	NO2/NO3	Diquat	Paraquat	Glyphosate	Turbidity	Sulphate	Total Iron	TDS	Herbicides	OC Pesticides	Misc Pesticides	SAMPLES ON HOLD	SUSPECTED HAZARD (see Special Instructions)
	TW5	Mar 10/20	p.m.	GW	4	✓	✓				✓	✓	✓	✓					
	TW11	↓	↓	↓	4	✓	✓				✓	✓	✓	✓					
	TW8	↓	↓	↓	10	✓	✓	✓	✓	✓	✓	✓	✓	✓	✓	✓	✓		

Drinking Water (DW) Samples[1] (client use)	Special Instructions / Specify Criteria to add on report by clicking on the drop-down list below (electronic COC only)
Are samples taken from a Regulated DW System? ☐ YES ☑ NO	
Are samples for human consumption/ use? ☑ YES ☐ NO	ODWS

SAMPLE CONDITION AS RECEIVED (lab use only)

Frozen ☐ | SIF Observations Yes ☐ No ☐

Ice Packs ☒ Ice Cubes ☐ | Custody seal intact Yes ☐ No ☐

Cooling Initiated ☐

INITIAL COOLER TEMPERATURES °C				FINAL COOLER TEMPERATURES °C			
5.1				5.2			

SHIPMENT RELEASE (client use)		
Released by:	Date: Mar 10/2020	Time:

INITIAL SHIPMENT RECEPTION (lab use only)		
Received by:	Date: 11/3/20	Time: 9:00

FINAL SHIPMENT RECEPTION (lab use only)		
Received by:	Date: 3-11-2020	Time: 1415

REFER TO BACK PAGE FOR ALS LOCATIONS AND SAMPLING INFORMATION

WHITE - LABORATORY COPY YELLOW - CLIENT COPY

NOV 2018 FRONT

Failure to complete all portions of this form may delay analysis. Please fill in this form LEGIBLY. By the use of this form the user acknowledges and agrees with the Terms and Conditions as specified on the back page of the white - report copy.

1. If any water samples are taken from a **Regulated Drinking Water (DW) System**, please submit using an **Authorized DW COC form**.

TOWN OF CALEDON
PLANNING
RECEIVED
Jul 12, 2021

COLE ENGINEERING GROUP LTD
ATTN: Aron Zhao
2620 Bristol Circle #300
Oakville ON L6H 6Z7

Date Received: 09-MAR-20
Report Date: 20-MAR-20 11:47 (MT)
Version: FINAL

Client Phone: 905-940-6161

Certificate of Analysis

Lab Work Order #: L2425776

Project P.O. #: NOT SUBMITTED
Job Reference: 2017-646
C of C Numbers: 17-731896
Legal Site Desc:

Emily Smith
Account Manager

[This report shall not be reproduced except in full without the written authority of the Laboratory.]

TOWN OF CALEDON
PLANNING
RECEIVED
Jul 12, 2021

ALS Environmental

ANALYTICAL GUIDELINE REPORT

2017-646

Sample Details Grouping / Analyte	Result	Qualifier	D.L.	Units	Analyzed	Guideline Limits #1	Guideline Limits #2
L2425776-1 TW6							
Sampled By: CLIENT on 09-MAR-20							
Matrix: WATER							
Physical Tests							
Total Dissolved Solids	389	DLDS	20	mg/L	19-MAR-20		500
Turbidity	0.34		0.10	NTU	10-MAR-20		5
Anions and Nutrients							
Nitrate (as N)	7.56		0.020	mg/L	10-MAR-20	10	
Nitrite (as N)	<0.010		0.010	mg/L	10-MAR-20	1	
Sulfate (SO4)	17.5		0.30	mg/L	10-MAR-20		500
Bacteriological Tests							
E. Coli	0		0	CFU/100mL	10-MAR-20	0	
Heterotrophic Plate Count	2		0	CFU/mL	10-MAR-20		
Total Coliform Background	4		0	CFU/100mL	10-MAR-20		
Total Coliforms	0		0	CFU/100mL	10-MAR-20	0	
Total Metals							
Iron (Fe)	<50		50	ug/L	11-MAR-20		300
Polycyclic Aromatic Hydrocarbons							
Benzo(a)pyrene	<0.0050		0.0050	ug/L	19-MAR-20	0.01	
Surrogate: d14-Terphenyl	93.7		40-130	%	19-MAR-20		
Organochlorine Pesticides							
alpha-Chlordane	<0.10		0.10	ug/L	18-MAR-20		
gamma-Chlordane	<0.10		0.10	ug/L	18-MAR-20		
p,p-DDD	<0.10		0.10	ug/L	18-MAR-20		
p,p-DDE	<0.10		0.10	ug/L	18-MAR-20		
o,p-DDT	<0.10		0.10	ug/L	18-MAR-20		
p,p-DDT	<0.10		0.10	ug/L	18-MAR-20		
Oxychlordane	<0.10		0.10	ug/L	18-MAR-20		
Surrogate: d14-Terphenyl	73.3		40-130	%	18-MAR-20		
Herbicides							
Bromoxynil	<0.20		0.20	ug/L	12-MAR-20	5	
2,4-D	<0.20		0.20	ug/L	12-MAR-20	100	
Dicamba	<0.20		0.20	ug/L	12-MAR-20	120	
Glyphosate	<5.0		5.0	ug/L	14-MAR-20	280	
MCPA	<0.20		0.20	ug/L	12-MAR-20	100	
Picloram	<0.20		0.20	ug/L	12-MAR-20	190	
Surrogate: 2,4-Dichlorophenylacetic Acid	112.0		50-130	%	12-MAR-20		
Pesticides							
Alachlor	<0.10		0.10	ug/L	18-MAR-20	5	
Atrazine	<0.10		0.10	ug/L	18-MAR-20		
Atrazine & Metabolites	<0.20		0.20	ug/L	18-MAR-20	5	
Azinphos-methyl	<0.10		0.10	ug/L	18-MAR-20	20	
Carbaryl	<0.20		0.20	ug/L	18-MAR-20	90	
Carbofuran	<0.20		0.20	ug/L	18-MAR-20	90	
Chlorpyrifos	<0.10		0.10	ug/L	18-MAR-20	90	
Diazinon	<0.10		0.10	ug/L	18-MAR-20	20	
Dimethoate	<0.10		0.10	ug/L	18-MAR-20	20	

** Detection Limit for result exceeds Guideline Limit. Assessment against Guideline Limit cannot be made.
* Analytical result for this parameter exceeds Guideline Limit listed on this report. Guideline Limits applied:

Ontario Drinking Water Regulation (ODWQS) JAN.1,2020 = [Suite] - ON-DW-STANDARD+GUIDELINES

#1: Schedule 1 (Microbiological) and 2 (Chemical) Standards (JAN,2020) **#2: Ontario DW Aesthetic and Operational Guidelines (June, 2006)**

TOWN OF CALEDON
PLANNING
RECEIVED
Jul 12, 2021

ALS Environmental

ANALYTICAL GUIDELINE REPORT

2017-646

Sample Details Grouping	Analyte	Result	Qualifier	D.L.	Units	Analyzed	Guideline Limits #1	Guideline Limits #2
L2425776-1	TW6							
Sampled By:	CLIENT on 09-MAR-20							
Matrix:	WATER							
Pesticides								
	Diquat	<1.0		1.0	ug/L	10-MAR-20	70	
	Atrazine Desethyl	<0.10		0.10	ug/L	18-MAR-20		
	Malathion	<0.10		0.10	ug/L	18-MAR-20	190	
	Diclofop-methyl	<0.20		0.20	ug/L	18-MAR-20	9	
	Metolachlor	<0.10		0.10	ug/L	18-MAR-20	50	
	Metribuzin	<0.10		0.10	ug/L	18-MAR-20	80	
	Paraquat	<1.0		1.0	ug/L	10-MAR-20	10	
	Phorate	<0.10		0.10	ug/L	18-MAR-20	2	
	Prometryne	<0.10		0.10	ug/L	18-MAR-20	1	
	Simazine	<0.10		0.10	ug/L	18-MAR-20	10	
	Terbufos	<0.20		0.20	ug/L	18-MAR-20	1	
	Triallate	<0.10		0.10	ug/L	18-MAR-20	230	
	Trifluralin	<0.10		0.10	ug/L	18-MAR-20	45	
	Surrogate: 2-Fluorobiphenyl	81.6		40-130	%	18-MAR-20		
L2425776-2	TW7							
Sampled By:	CLIENT on 09-MAR-20							
Matrix:	WATER						#1	#2
Physical Tests								
	Total Dissolved Solids	345	DLDS	20	mg/L	12-MAR-20		500
	Turbidity	1.97		0.10	NTU	10-MAR-20		5
Anions and Nutrients								
	Nitrate (as N)	7.37		0.020	mg/L	10-MAR-20	10	
	Nitrite (as N)	<0.010		0.010	mg/L	10-MAR-20	1	
	Sulfate (SO4)	18.0		0.30	mg/L	10-MAR-20		500
Bacteriological Tests								
	E. Coli	0		0	CFU/100mL	10-MAR-20	0	
	Heterotrophic Plate Count	4		0	CFU/mL	10-MAR-20		
	Total Coliform Background	30	DLM	10	CFU/100mL	10-MAR-20		
	Total Coliforms	0		0	CFU/100mL	10-MAR-20	0	
Total Metals								
	Iron (Fe)	61		50	ug/L	11-MAR-20		300
L2425776-3	TW9							
Sampled By:	CLIENT on 09-MAR-20							
Matrix:	WATER						#1	#2
Physical Tests								
	Total Dissolved Solids	310	DLDS	20	mg/L	12-MAR-20		500
	Turbidity	2.40		0.10	NTU	10-MAR-20		5
Anions and Nutrients								
	Nitrate (as N)	1.74		0.020	mg/L	10-MAR-20	10	
	Nitrite (as N)	<0.010		0.010	mg/L	10-MAR-20	1	
	Sulfate (SO4)	19.1		0.30	mg/L	10-MAR-20		500

** Detection Limit for result exceeds Guideline Limit. Assessment against Guideline Limit cannot be made.
* Analytical result for this parameter exceeds Guideline Limit listed on this report. Guideline Limits applied:

Ontario Drinking Water Regulation (ODWQS) JAN.1,2020 = [Suite] - ON-DW-STANDARD+GUIDELINES

#1: Schedule 1 (Microbiological) and 2 (Chemical) Standards (JAN,2020) **#2: Ontario DW Aesthetic and Operational Guidelines (June, 2006)**

TOWN OF CALEDON
PLANNING
RECEIVED
Jul 12, 2021

ALS Environmental

ANALYTICAL GUIDELINE REPORT

2017-646

Sample Details Grouping	Analyte	Result	Qualifier	D.L.	Units	Analyzed	Guideline Limits #1	Guideline Limits #2
L2425776-3	TW9							
Sampled By:	CLIENT on 09-MAR-20							
Matrix:	WATER							
Bacteriological Tests								
	E. Coli	0		0	CFU/100mL	10-MAR-20	0	
	Heterotrophic Plate Count	9		0	CFU/mL	10-MAR-20		
	Total Coliform Background	23		0	CFU/100mL	10-MAR-20		
	Total Coliforms	17		0	CFU/100mL	10-MAR-20	*0	
Total Metals								
	Iron (Fe)	112		50	ug/L	11-MAR-20		300
L2425776-4	DUP-2							
Sampled By:	CLIENT on 09-MAR-20							
Matrix:	WATER						#1	#2
Physical Tests								
	Total Dissolved Solids	341	DLDS	20	mg/L	12-MAR-20		500
	Turbidity	1.55		0.10	NTU	10-MAR-20		5
Anions and Nutrients								
	Nitrate (as N)	7.39		0.020	mg/L	10-MAR-20	10	
	Nitrite (as N)	<0.010		0.010	mg/L	10-MAR-20	1	
	Sulfate (SO4)	17.8		0.30	mg/L	10-MAR-20		500
Bacteriological Tests								
	E. Coli	0		0	CFU/100mL	10-MAR-20	0	
	Heterotrophic Plate Count	4		0	CFU/mL	10-MAR-20		
	Total Coliform Background	10		10	CFU/100mL	10-MAR-20		
	Total Coliforms	0		0	CFU/100mL	10-MAR-20	0	
Total Metals								
	Iron (Fe)	<50		50	ug/L	11-MAR-20		300

** Detection Limit for result exceeds Guideline Limit. Assessment against Guideline Limit cannot be made.
* Analytical result for this parameter exceeds Guideline Limit listed on this report. Guideline Limits applied:

Ontario Drinking Water Regulation (ODWQS) JAN.1,2020 = [Suite] - ON-DW-STANDARD+GUIDELINES

#1: Schedule 1 (Microbiological) and 2 (Chemical) Standards (JAN,2020) **#2: Ontario DW Aesthetic and Operational Guidelines (June, 2006)**

TOWN OF CALEDON
PLANNING
RECEIVED
Jul 12, 2021

Reference Information

Sample Parameter Qualifier key listed:

Qualifier	Description
DLDS	Detection Limit Raised: Dilution required due to high Dissolved Solids / Electrical Conductivity.
DLM	Detection Limit Adjusted due to sample matrix effects (e.g. chemical interference, colour, turbidity).

Methods Listed (if applicable):

ALS Test Code	Matrix	Test Description	Method Reference***
BAP-ONT-DW-WT	Water	Benzo(a)pyrene in Drinking Water	SW 846 8270
DIQUAT-ONT-DW-WT	Water	Diquat in Water by LC/MS-MS	E3503
		An aliquot of the sample is taken and internal standard is added. The sample is analyzed by LC/MS/MS.	
EC-DW-WT	Water	E. coli	SM 9222D
		A 100 mL volume of sample is filtered through a membrane, the membrane is placed on mFC-BCIG agar and incubated at 44.5 –0 .2 °C for 24 – 2 h. Method ID: WT-TM-1200	
EC-SCREEN-WT	Water	Conductivity Screen (Internal Use Only)	APHA 2510
		Qualitative analysis of conductivity where required during preparation of other tests - e.g. TDS, metals, etc.	
GLYPHOSATE-ONT-DW-WT	Water	Glyphosate in Drinking Water	MOE E3500
		This analysis is carried out using procedures adapted from ON MOE E3500 "Glyphosate". Glyphosate is determined by direct injection by LC-MS/MS on a sample that bas been derivatized.	
HPC-DW-MF-WT	Water	Heterotrophic Plate Count	SM 9215D
		A 1mL volume of sample is filtered through a membrane, the membrane is placed on mHPC agar and incubated for 48–2h@35–0.5°C. Method ID: WT-TM-1200	
MET-ONT-DW-WT	Water	Drinking Water Metals	EPA 6020A
MISC-ONT-DW-WT	Water	O.Reg 170/03 Miscellaneous Pesticides	SW846 8270
		Pesticides are extracted from an aqueous sample using separate aliquots of solvent, extracts are concentrated down to a certain volume and analyzed on the GC/MSD.	
NO2-DW-IC-WT	Water	Nitrite in Water by IC	EPA 300.1 (mod)
		Inorganic anions are analyzed by Ion Chromatography with conductivity and/or UV detection.	
NO3-DW-IC-WT	Water	Nitrate in Water by IC	EPA 300.1 (mod)
		Inorganic anions are analyzed by Ion Chromatography with conductivity and/or UV detection.	
OCPEST-ONT-DW-WT	Water	O.Reg 170/03 OC Pesticides	SW846 8270
		Pesticides are extracted from an aqueous sample using separate aliquots of solvent, extracts are concentrated and analyzed on the GC/MSD.	
PAHERB-ONT-DW-WT	Water	O.Reg 170/03 PA Herbicides	MOE E3552
		Water samples are analyzed by direct injection without sample preparation using liquid chromatography tandem mass spectrometry (LC-MS/MS).	
PARAQUAT-ONT-DW-WT	Water	Paraquat in Water by LC/MS-MS	E3503
		An aliquot of the sample is taken and internal standard is added. The sample is analyzed by LC/MS/MS.	
SO4-IC-N-ONT-DW-WT	Water	Sulfate in Water by IC	EPA 300.1 (mod)
		Inorganic anions are analyzed by Ion Chromatography with conductivity and/or UV detection.	
SOLIDS-TDS-ONT-DW-WT	Water	Total Dissolved Solids	APHA 2540C
		This analysis is carried out using procedures adapted from APHA Method 2540 "Solids". Solids are determined gravimetrically. Total Dissolved Solids (TDS) are determined by filtering a sample through a glass fibre filter, TDS is determined by evaporating the filtrate to dryness at 180 degrees celsius.	
TC-DW-WT	Water	Total Coliforms	SM 9222B
		A 100mL volume of sample is filtered through a membrane, the membrane is placed on mENDO LES agar and incubated at 35–0.5°C for 24–2h. Method ID: WT-TM-1200	
TCB-DW-WT	Water	Total Coliform Background	SM 9222B
		A 100mL volume of sample is filtered through a membrane, the membrane is placed on mENDO LES agar and incubated at 35–0.5°C for 24–2h. Method ID: WT-TM-1200.	
TURB-MET-WT	Water	Turbidity on preserved metals sample	APHA 2130 B
		Sample result is based on a comparison of the intensity of the light scattered by the sample under defined conditions with the intensity of light scattered by a standard reference suspension under the same conditions. Sample readings are obtained from a Nephelometer.	

TOWN OF CALEDON
PLANNING
RECEIVED
Jul 12, 2021

Reference Information

TURBIDITY-ONT-DW-WT	Water	Turbidity	APHA 2130 B

Sample result is based on a comparison of the intensity of the light scattered by the sample under defined conditions with the intensity of light scattered by a standard reference suspension under the same conditions. Sample readings are obtained from a Nephelometer.

*** ALS test methods may incorporate modifications from specified reference methods to improve performance.

Chain of Custody numbers:

17-731896

The last two letters of the above test code(s) indicate the laboratory that performed analytical analysis for that test. Refer to the list below:

Laboratory Definition Code	Laboratory Location	Laboratory Definition Code	Laboratory Location
WT	ALS ENVIRONMENTAL - WATERLOO, ONTARIO, CANADA		

GLOSSARY OF REPORT TERMS

Surrogates are compounds that are similar in behaviour to target analyte(s), but that do not normally occur in environmental samples. For applicable tests, surrogates are added to samples prior to analysis as a check on recovery. In reports that display the D.L. column, laboratory objectives for surrogates are listed there.
mg/kg - milligrams per kilogram based on dry weight of sample
mg/kg wwt - milligrams per kilogram based on wet weight of sample
mg/kg lwt - milligrams per kilogram based on lipid-adjusted weight
mg/L - unit of concentration based on volume, parts per million.
< - Less than.
D.L. - The reporting limit.
N/A - Result not available. Refer to qualifier code and definition for explanation.

Test results reported relate only to the samples as received by the laboratory.
UNLESS OTHERWISE STATED, ALL SAMPLES WERE RECEIVED IN ACCEPTABLE CONDITION.
Analytical results in unsigned test reports with the DRAFT watermark are subject to change, pending final QC review.

Application of guidelines is provided "as is" without warranty of any kind, either expressed or implied, including, but not limited to, fitness for a particular purpose, or non-infringement. ALS assumes no responsibility for errors or omissions in the information. Guideline limits are not adjusted for the hardness, pH or temperature of the sample (the most conservative values are used). Measurement uncertainty is not applied to test results prior to comparison with specified criteria values.

TOWN OF CALEDON
PLANNING
RECEIVED
Jul 12, 2021

Quality Control Report

Workorder: L2425776 Report Date: 20-MAR-20

Client: COLE ENGINEERING GROUP LTD
2620 Bristol Circle #300
Oakville ON L6H 6Z7
Contact: Aron Zhao

Test	Matrix	Reference	Result	Qualifier	Units	RPD	Limit	Analyzed
BAP-ONT-DW-WT	**Water**							
Batch R5031483								
WG3293919-2 LCS								
Benzo(a)pyrene			74.4		%		60-130	19-MAR-20
WG3293919-1 MB								
Benzo(a)pyrene			<0.0050		ug/L		0.005	19-MAR-20
Surrogate: d14-Terphenyl			92.6		%		40-130	19-MAR-20
DIQUAT-ONT-DW-WT	**Water**							
Batch R5020270								
WG3288546-3 DUP		**WG3288546-5**						
Diquat		<1.0	<1.0	RPD-NA	ug/L	N/A	30	09-MAR-20
WG3288546-2 LCS								
Diquat			100.4		%		70-130	09-MAR-20
WG3288546-1 MB								
Diquat			<1.0		ug/L		1	09-MAR-20
WG3288546-4 MS		**WG3288546-5**						
Diquat			100.0		%		70-130	09-MAR-20
EC-DW-WT	**Water**							
Batch R5021004								
WG3289454-3 DUP		**L2425657-1**						
E. Coli		0	0		CFU/100mL	0.0	50	10-MAR-20
WG3289454-4 DUP		**L2425776-1**						
E. Coli		0	0		CFU/100mL	0.0	50	10-MAR-20
WG3289454-1 MB								
E. Coli			0		CFU/100mL		1	10-MAR-20
GLYPHOSATE-ONT-DW-WT	**Water**							
Batch R5026570								
WG3290481-3 DUP		**WG3290481-5**						
Glyphosate		<5.0	<5.0	RPD-NA	ug/L	N/A	30	14-MAR-20
WG3290481-2 LCS								
Glyphosate			93.6		%		70-130	13-MAR-20
WG3290481-1 MB								
Glyphosate			<5.0		ug/L		5	13-MAR-20
WG3290481-4 MS		**WG3290481-5**						
Glyphosate			97.2		%		70-130	14-MAR-20
HPC-DW-MF-WT	**Water**							

TOWN OF CALEDON
PLANNING
RECEIVED
Jul 12, 2021

Quality Control Report

Client: COLE ENGINEERING GROUP LTD
2620 Bristol Circle #300
Oakville ON L6H 6Z7
Contact: Aron Zhao

Test	Matrix	Reference	Result	Qualifier	Units	RPD	Limit	Analyzed
HPC-DW-MF-WT	**Water**							
Batch R5021668								
WG3289448-3 DUP		**L2425646-4**						
Heterotrophic Plate Count		0	0		CFU/mL	0.0	65	10-MAR-20
WG3289448-4 DUP		**L2425634-5**						
Heterotrophic Plate Count		0	0		CFU/mL	0.0	65	10-MAR-20
WG3289448-1 MB								
Heterotrophic Plate Count			0		CFU/mL		1	10-MAR-20
MET-ONT-DW-WT	**Water**							
Batch R5020935								
WG3290165-4 DUP		**WG3290165-3**						
Iron (Fe)		<50	<50	RPD-NA	ug/L	N/A	25	11-MAR-20
WG3290165-2 LCS								
Iron (Fe)			93.5		%		70-130	11-MAR-20
WG3290165-1 MB								
Iron (Fe)			<50		ug/L		50	11-MAR-20
WG3290165-5 MS		**WG3290165-3**						
Iron (Fe)			96.1		%		70-130	11-MAR-20
MISC-ONT-DW-WT	**Water**							
Batch R5029726								
WG3293919-2 LCS								
Alachlor			109.5		%		60-130	18-MAR-20
Atrazine			82.9		%		60-130	18-MAR-20
Atrazine Desethyl			57.9		%		50-130	18-MAR-20
Azinphos-methyl			96.4		%		60-140	18-MAR-20
Carbaryl			117.3		%		50-140	18-MAR-20
Carbofuran			107.2		%		60-140	18-MAR-20
Chlorpyrifos			96.5		%		60-130	18-MAR-20
Diazinon			90.1		%		60-130	18-MAR-20
Diclofop-methyl			93.0		%		60-140	18-MAR-20
Dimethoate			88.7		%		60-130	18-MAR-20
Malathion			90.2		%		60-130	18-MAR-20
Metribuzin			101.3		%		60-130	18-MAR-20
Metolachlor			109.4		%		60-130	18-MAR-20
Phorate			95.2		%		30-140	18-MAR-20
Prometryne			107.1		%		60-130	18-MAR-20
Simazine			97.2		%		60-130	18-MAR-20
Terbufos			91.4		%		60-130	18-MAR-20

TOWN OF CALEDON
PLANNING
RECEIVED
Jul 12, 2021

Quality Control Report

Client: COLE ENGINEERING GROUP LTD
2620 Bristol Circle #300
Oakville ON L6H 6Z7
Contact: Aron Zhao

Test	Matrix	Reference	Result	Qualifier	Units	RPD	Limit	Analyzed
MISC-ONT-DW-WT	**Water**							
Batch R5029726								
WG3293919-2 LCS								
Triallate			100.7		%		60-130	18-MAR-20
Trifluralin			90.0		%		60-130	18-MAR-20
WG3293919-1 MB								
Alachlor			<0.10		ug/L		0.1	18-MAR-20
Atrazine			<0.10		ug/L		0.1	18-MAR-20
Atrazine Desethyl			<0.10		ug/L		0.1	18-MAR-20
Azinphos-methyl			<0.10		ug/L		0.1	18-MAR-20
Carbaryl			<0.20		ug/L		0.2	18-MAR-20
Carbofuran			<0.20		ug/L		0.2	18-MAR-20
Chlorpyrifos			<0.10		ug/L		0.1	18-MAR-20
Diazinon			<0.10		ug/L		0.1	18-MAR-20
Diclofop-methyl			<0.20		ug/L		0.2	18-MAR-20
Dimethoate			<0.10		ug/L		0.1	18-MAR-20
Malathion			<0.10		ug/L		0.1	18-MAR-20
Metribuzin			<0.10		ug/L		0.1	18-MAR-20
Metolachlor			<0.10		ug/L		0.1	18-MAR-20
Phorate			<0.10		ug/L		0.1	18-MAR-20
Prometryne			<0.10		ug/L		0.1	18-MAR-20
Simazine			<0.10		ug/L		0.1	18-MAR-20
Terbufos			<0.20		ug/L		0.2	18-MAR-20
Triallate			<0.10		ug/L		0.1	18-MAR-20
Trifluralin			<0.10		ug/L		0.1	18-MAR-20
Surrogate: 2-Fluorobiphenyl			87.6		%		40-130	18-MAR-20
NO2-DW-IC-WT	**Water**							
Batch R5021223								
WG3289462-14 DUP		**WG3289462-13**						
Nitrite (as N)		<0.010	<0.010	RPD-NA	mg/L	N/A	20	10-MAR-20
WG3289462-12 LCS								
Nitrite (as N)			100.0		%		90-110	10-MAR-20
WG3289462-11 MB								
Nitrite (as N)			<0.010		mg/L		0.01	10-MAR-20
WG3289462-15 MS		**WG3289462-13**						
Nitrite (as N)			99.9		%		75-125	10-MAR-20
NO3-DW-IC-WT	**Water**							

TOWN OF CALEDON
PLANNING
RECEIVED
Jul 12, 2021

Quality Control Report

Client: COLE ENGINEERING GROUP LTD
2620 Bristol Circle #300
Oakville ON L6H 6Z7
Contact: Aron Zhao

Test	Matrix	Reference	Result	Qualifier	Units	RPD	Limit	Analyzed
NO3-DW-IC-WT	**Water**							
Batch R5021223								
WG3289462-14 DUP		**WG3289462-13**						
Nitrate (as N)		0.024	0.023		mg/L	4.0	20	10-MAR-20
WG3289462-12 LCS								
Nitrate (as N)			99.8		%		90-110	10-MAR-20
WG3289462-11 MB								
Nitrate (as N)			<0.020		mg/L		0.02	10-MAR-20
WG3289462-15 MS		**WG3289462-13**						
Nitrate (as N)			96.4		%		75-125	10-MAR-20
OCPEST-ONT-DW-WT	**Water**							
Batch R5029887								
WG3293919-2 LCS								
Oxychlordane			72.3		%		50-150	18-MAR-20
gamma-Chlordane			68.8		%		50-150	18-MAR-20
alpha-Chlordane			70.1		%		50-150	18-MAR-20
p,p-DDE			57.1		%		50-150	18-MAR-20
p,p-DDD			63.3		%		50-150	18-MAR-20
p,p-DDT			72.7		%		50-150	18-MAR-20
o,p-DDT			62.8		%		50-150	18-MAR-20
WG3293919-1 MB								
Oxychlordane			<0.10		ug/L		0.1	18-MAR-20
gamma-Chlordane			<0.10		ug/L		0.1	18-MAR-20
alpha-Chlordane			<0.10		ug/L		0.1	18-MAR-20
p,p-DDE			<0.10		ug/L		0.1	18-MAR-20
p,p-DDD			<0.10		ug/L		0.1	18-MAR-20
p,p-DDT			<0.10		ug/L		0.1	18-MAR-20
o,p-DDT			<0.10		ug/L		0.1	18-MAR-20
Surrogate: d14-Terphenyl			73.4		%		40-130	18-MAR-20
PAHERB-ONT-DW-WT	**Water**							
Batch R5021625								
WG3290151-3 DUP		**WG3290151-5**						
Dicamba		<0.20	<0.20	RPD-NA	ug/L	N/A	30	12-MAR-20
Bromoxynil		<0.20	<0.20	RPD-NA	ug/L	N/A	30	12-MAR-20
2,4-D		<0.20	<0.20	RPD-NA	ug/L	N/A	30	12-MAR-20
Picloram		<0.20	<0.20	RPD-NA	ug/L	N/A	30	12-MAR-20
MCPA		<0.20	<0.20	RPD-NA	ug/L	N/A	30	12-MAR-20
WG3290151-2 LCS								

TOWN OF CALEDON
PLANNING
RECEIVED
Jul 12, 2021

Quality Control Report

Workorder: L2425776 Report Date: 20-MAR-20

Client: COLE ENGINEERING GROUP LTD
2620 Bristol Circle #300
Oakville ON L6H 6Z7
Contact: Aron Zhao

Test	Matrix	Reference	Result	Qualifier	Units	RPD	Limit	Analyzed
PAHERB-ONT-DW-WT	**Water**							
Batch R5021625								
WG3290151-2 LCS								
Dicamba			103.5		%		65-130	12-MAR-20
Bromoxynil			95.5		%		65-130	12-MAR-20
2,4-D			98.9		%		65-130	12-MAR-20
Picloram			115.5		%		50-150	12-MAR-20
MCPA			100.0		%		65-130	12-MAR-20
WG3290151-1 MB								
Dicamba			<0.20		ug/L		0.2	12-MAR-20
Bromoxynil			<0.20		ug/L		0.2	12-MAR-20
2,4-D			<0.20		ug/L		0.2	12-MAR-20
Picloram			<0.20		ug/L		0.2	12-MAR-20
MCPA			<0.20		ug/L		0.2	12-MAR-20
Surrogate: 2,4-Dichlorophenylacetic Acid			117.0		%		50-130	12-MAR-20
WG3290151-4 MS		**WG3290151-5**						
Dicamba			87.0		%		50-150	12-MAR-20
Bromoxynil			94.8		%		50-150	12-MAR-20
2,4-D			78.0		%		50-150	12-MAR-20
Picloram			101.8		%		50-150	12-MAR-20
MCPA			79.1		%		50-150	12-MAR-20
PARAQUAT-ONT-DW-WT	**Water**							
Batch R5020270								
WG3288546-3 DUP		**WG3288546-5**						
Paraquat		<1.0	<1.0	RPD-NA	ug/L	N/A	30	09-MAR-20
WG3288546-2 LCS								
Paraquat			107.6		%		70-130	09-MAR-20
WG3288546-1 MB								
Paraquat			<1.0		ug/L		1	09-MAR-20
WG3288546-4 MS		**WG3288546-5**						
Paraquat			86.8		%		70-130	09-MAR-20
SO4-IC-N-ONT-DW-WT	**Water**							
Batch R5021223								
WG3289462-14 DUP		**WG3289462-13**						
Sulfate (SO4)		70.7	70.8		mg/L	0.1	20	10-MAR-20
WG3289462-12 LCS								
Sulfate (SO4)			101.5		%		90-110	10-MAR-20
WG3289462-11 MB								

TOWN OF CALEDON
PLANNING
RECEIVED
Jul 12, 2021

Quality Control Report

Workorder: L2425776 Report Date: 20-MAR-20

Client: COLE ENGINEERING GROUP LTD
2620 Bristol Circle #300
Oakville ON L6H 6Z7
Contact: Aron Zhao

Test	Matrix	Reference	Result	Qualifier	Units	RPD	Limit	Analyzed
SO4-IC-N-ONT-DW-WT	**Water**							
Batch R5021223								
WG3289462-11 MB								
Sulfate (SO4)			<0.30		mg/L		0.3	10-MAR-20
WG3289462-15 MS		**WG3289462-13**						
Sulfate (SO4)			101.1		%		75-125	10-MAR-20
SOLIDS-TDS-ONT-DW-WT	**Water**							
Batch R5025247								
WG3291401-2 LCS								
Total Dissolved Solids			100.1		%		70-130	12-MAR-20
WG3291401-1 MB								
Total Dissolved Solids			<10		mg/L		10	12-MAR-20
Batch R5033000								
WG3294507-3 DUP		**L2425657-1**						
Total Dissolved Solids		413	434		mg/L	5.0	25	19-MAR-20
WG3294507-2 LCS								
Total Dissolved Solids			102.3		%		70-130	19-MAR-20
WG3294507-1 MB								
Total Dissolved Solids			<10		mg/L		10	19-MAR-20
TC-DW-WT	**Water**							
Batch R5021012								
WG3289455-3 DUP		**L2425776-4**						
Total Coliforms		0	<10	RPD-NA	CFU/100mL	N/A	50	10-MAR-20
WG3289455-4 DUP		**L2425776-2**						
Total Coliforms		0	<10	RPD-NA	CFU/100mL	N/A	50	10-MAR-20
WG3289455-1 MB								
Total Coliforms			0		CFU/100mL		1	10-MAR-20
TCB-DW-WT	**Water**							
Batch R5021012								
WG3289455-3 DUP		**L2425776-4**						
Total Coliform Background		10	9		CFU/100mL	11	50	10-MAR-20
WG3289455-4 DUP		**L2425776-2**						
Total Coliform Background		30	6	DUP-H,J	CFU/100mL	24	20	10-MAR-20
WG3289455-1 MB								
Total Coliform Background			0		CFU/100mL		1	10-MAR-20
TURBIDITY-ONT-DW-WT	**Water**							

TOWN OF CALEDON
PLANNING
RECEIVED
Jul 12, 2021

Quality Control Report

Client: COLE ENGINEERING GROUP LTD
2620 Bristol Circle #300
Oakville ON L6H 6Z7
Contact: Aron Zhao

Test	Matrix	Reference	Result	Qualifier	Units	RPD	Limit	Analyzed
TURBIDITY-ONT-DW-WT	**Water**							
Batch R5020266								
WG3289353-3 DUP		**L2425657-2**						
Turbidity		66.4	69.6		NTU	4.7	15	10-MAR-20
WG3289353-2 LCS								
Turbidity			102.5		%		85-115	10-MAR-20
WG3289353-1 MB								
Turbidity			<0.10		NTU		0.1	10-MAR-20

TOWN OF CALEDON
PLANNING
RECEIVED
Jul 12, 2021

Quality Control Report

Workorder: L2425776 Report Date: 20-MAR-20

Client: COLE ENGINEERING GROUP LTD
2620 Bristol Circle #300
Oakville ON L6H 6Z7

Contact: Aron Zhao

Legend:

Limit	ALS Control Limit (Data Quality Objectives)
DUP	Duplicate
RPD	Relative Percent Difference
N/A	Not Available
LCS	Laboratory Control Sample
SRM	Standard Reference Material
MS	Matrix Spike
MSD	Matrix Spike Duplicate
ADE	Average Desorption Efficiency
MB	Method Blank
IRM	Internal Reference Material
CRM	Certified Reference Material
CCV	Continuing Calibration Verification
CVS	Calibration Verification Standard
LCSD	Laboratory Control Sample Duplicate

Sample Parameter Qualifier Definitions:

Qualifier	Description
DUP-H,J	Duplicate results outside ALS DQO, due to sample heterogeneity. Duplicate results and limits are expressed in terms of absolute difference.
RPD-NA	Relative Percent Difference Not Available due to result(s) being less than detection limit.

Hold Time Exceedances:

All test results reported with this submission were conducted within ALS recommended hold times.

ALS recommended hold times may vary by province. They are assigned to meet known provincial and/or federal government requirements. In the absence of regulatory hold times, ALS establishes recommendations based on guidelines published by the US EPA, APHA Standard Methods, or Environment Canada (where available). For more information, please contact ALS.

The ALS Quality Control Report is provided to ALS clients upon request. ALS includes comprehensive QC checks with every analysis to ensure our high standards of quality are met. Each QC result has a known or expected target value, which is compared against pre-determined data quality objectives to provide confidence in the accuracy of associated test results.

Please note that this report may contain QC results from anonymous Sample Duplicates and Matrix Spikes that do not originate from this Work Order.

TOWN OF CALEDON
PLANNING
RECEIVED
Jul 12, 2021

Chain of Custody (COC) / Analytical Request Form

(ALS) Environmental
www.alsglobal.com

Canada Toll Free: 1 800 668 9878

L2425776-COFC

COC Number: 17 - 731896

Page 1 of 1

Report To	Contact and company name below will appear on the final report	Report Format / D	Contact your AM to confirm all E&P TATs (surcharges may apply)
Company:	COLE	Select Report Format: PDF EXCEL EDD (DIGITAL)	Regular [R]: Standard TAT if received by 3 pm - business days - no surcharges apply
Contact:	Aron Zhao	Quality Control (QC) Report with Report: YES NO	PRIORITY (Business Days): 4 day [P4-20%]; 3 day [P3-25%]; 2 day [P2-50%]
Phone:	905-940-6161	Compare Results to Criteria on Report - provide details below if box checked	EMERGENCY: 1 Business day [E-100%]; Same Day, Weekend or Statutory holiday [E2-200%] (Laboratory opening fees may apply)]
	Company address below will appear on the final report	Select Distribution: EMAIL MAIL FAX	Date and Time Required for all E&P TATs:
Street:	2620 Bristol Circle #300	Email 1 or Fax: azhao@coleengineering.ca	For tests that can not be performed according to the service level selected, you will be contacted.
City/Province:	Oakville	Email 2: sdavies@ "	
Postal Code:	L6H 6Z7	Email 3:	
Invoice To	Same as Report To: YES NO	Invoice Distribution	
	Copy of Invoice with Report: YES NO	Select Invoice Distribution: EMAIL MAIL FAX	
Company:	Cole AP	Email 1 or Fax: azhao@ "	
Contact:	cole.ap@coleengineering.ca	Email 2: cole.ap@ "	

Project Information			
ALS Account # / Quote #:		AFE/Cost Center:	PO#
Job #:		Major/Minor Code:	Routing Code:
PO / AFE:		Requisitioner:	
LSD:		Location:	
ALS Lab Work Order # (lab use only):	L2425776 R0	ALS Contact:	Sampler:

Analysis Request — Indicate Filtered (F), Preserved (P) or Filtered and Preserved (F/P) below

ALS Sample # (lab use only)	Sample Identification and/or Coordinates (This description will appear on the report)	Date (dd-mmm-yy)	Time (hh:mm)	Sample Type	TC,EC,HPC,TCB	NO2/NO3	Diquat/Paraquat	Glyphosate	Turbidity	Sulphate	Total Iron	TDS	Pesticide/Herbicide	SAMPLES ON HOLD	Sample is hazardous (please provide further details)	NUMBER OF CONTAINERS
	TW6	Mar 9/2020	p.m.	GW	✓	✓	✓	✓	✓	✓	✓	✓	✓			
	TW7	↓	a.m.	↓	✓	✓			✓	✓	✓	✓				
	TW9		↓		✓	✓			✓	✓	✓	✓				
	DVP-2				✓	✓			✓	✓	✓	✓				

Drinking Water (DW) Samples[1] (client use)	Special Instructions / Specify Criteria to add on report by clicking on the drop-down list below (electronic COC only)
Are samples taken from a Regulated DW System? NO	ODWS
Are samples for human consumption/ use? YES	

SAMPLE CONDITION AS RECEIVED (lab use only)

Frozen		SIF Observations	Yes		No	
Ice Packs		Ice Cubes ✓	Custody seal intact		Yes	No
Cooling Initiated						

INITIAL COOLER TEMPERATURES °C			FINAL COOLER TEMPERATURES °C			
5.6 °C			3.1			

SHIPMENT RELEASE (client use)			INITIAL SHIPMENT RECEPTION (lab use only)			FINAL SHIPMENT RECEPTION (lab use only)		
Released by:	Date: Mar 9, 2020	Time: 3:10	Received by:	Date: 3/9/2020	Time: 21:15	Received by: AP	Date: 9-MAR-20	Time: 19:00

REFER TO BACK PAGE FOR ALS LOCATIONS AND SAMPLING INFORMATION

WHITE - LABORATORY COPY YELLOW - CLIENT COPY

JULY 2017 FRONT

Failure to complete all portions of this form may delay analysis. Please fill in this form LEGIBLY. By the use of this form the user acknowledges and agrees with the Terms and Conditions as specified on the back page of the white - report copy.

1. If any water samples are taken from a **Regulated Drinking Water (DW) System**, please submit using an **Authorized DW COC form**.

TOWN OF CALEDON
PLANNING
RECEIVED

Jul 12, 2021

APPENDIX H

Typical Water and Wastewater Treatment System

TOWN OF CALEDON
PLANNING
RECEIVED
Jul 12, 2021

Advanced Septic Systems

The ideal solution for your **home** and **cottage**

Environmentally Friendly and Sustainable

Waterloo BIOFILTER

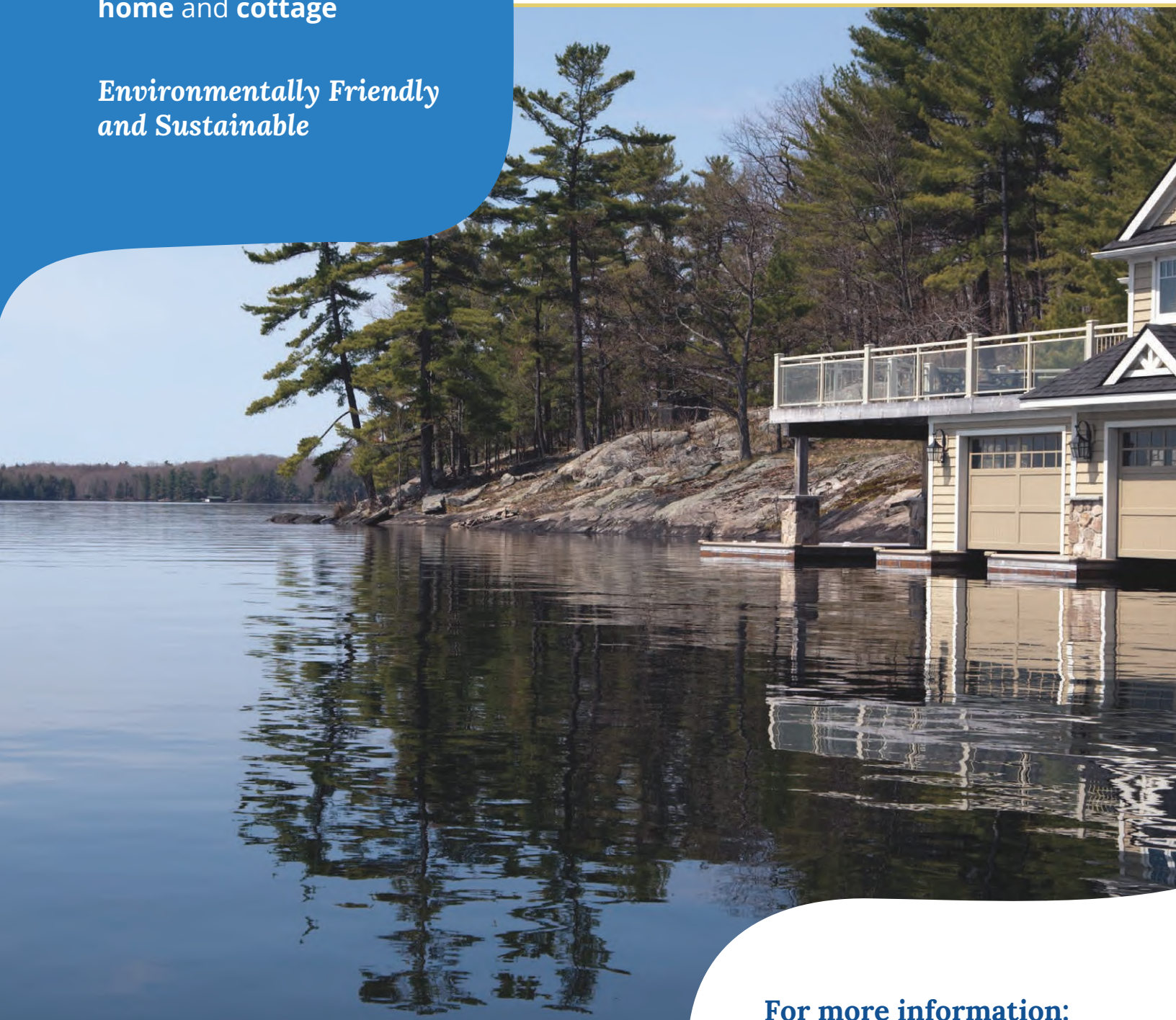

BNQ
CAN/BNQ 3680-600
Certificate No. 2312

ETV

For more information:

www.waterloo-biofilter.com
1-866-366-4329
info@waterloo-biofilter.com

TOWN OF CALEDON
PLANNING
RECEIVED
Jul 12, 2021

The Waterloo Advantage

Waterloo Biofilter Systems Inc. is a Canadian-owned and operated company that has for over 20 years developed, designed, manufactured, and maintained advanced onsite wastewater treatment systems.

We are committed to helping protect the environment with technology focused on high quality treatment, low energy usage, and system robustness.

UNIVERSITY OF WATERLOO

The patented Waterloo Biofilter system was developed at the University of Waterloo's Centre for Groundwater Research.

A Waterloo is designed to perform on difficult sites

Small or Remote Lots

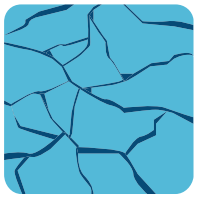

Bedrock or Clay Soils

High Watertable

Environmentally Sensitive Areas

The environmentally friendly choice

Permanent Filter Medium

The key to the Waterloo Biofilter system is the absorbent foam filter medium that has been optimized to physically filter and biologically treat sewage. This filter medium is warrantied for 20 years and will likely last generations.

Step 1

Wastewater is collected and distributed over the Waterloo foam filter medium.

Step 2

Wastewater slowly trickles down through the foam pieces where natural occurring bacteria remove contaminants.

Step 3

After passing through the foam, the treated water is put back into the environment.

TOWN OF CALEDON
PLANNING
RECEIVED
Jul 12, 2021

Low Energy, Low Operating Cost

Waterloo Biofilters use very little energy; up to **85% less** power than aeration technologies using air compressors. In the long-term we have the lowest operating costs.

Few moving parts

Less energy use

No noisy air compressor

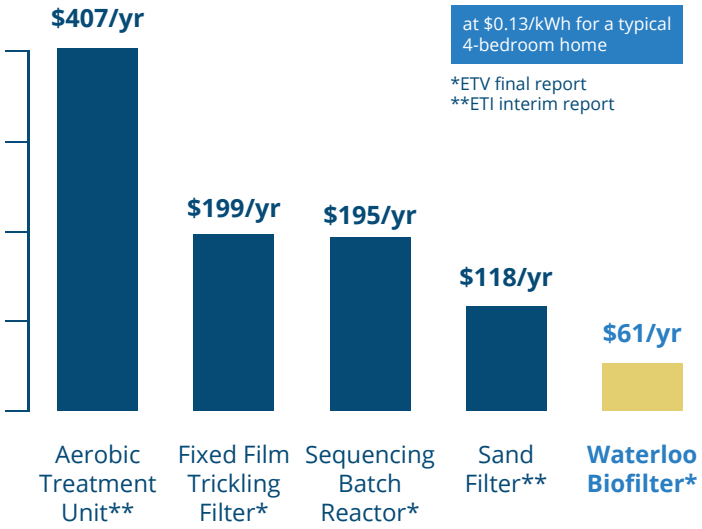

Nitrogen Removal

Standard Waterloo systems remove up to **50-65% total nitrogen**, helping to reduce nitrate levels in groundwater and protect surface waters. With the **WaterNOx-LS™** system add-on, up to **95% TN removal** can be achieved passively and cost-effectively.

Phosphorous Removal

With the **Waterloo EC-P™** system add-on, greater than **95% total phosphorus** can be removed – helping protect surface waters from blue-green algae and lake eutrophication. Compact and low energy, the Waterloo EC-P™ permanently removes phosphorus without chemicals or additional sludge production.

Small Footprint

A Waterloo is discrete and minimizes raised mounding and tree removal. A variety of product configurations are available to suit your unique site conditions and personal tastes.

Seasonal Performance

Whether for seasonal or year-round use, the Waterloo is designed to withstand extreme cold temperatures and can easily handle variable flow rates.

Made in Canada
Tough Enough for Canada

TOWN OF CALEDON
PLANNING
RECEIVED
Jul 12, 2021

Residential Products

Waterloo Shed Biofilters are spray foam insulated for winter operation, clad in attractive composite siding, and roofed with 50-year shingles. Shed Biofilters are compact and require only a single pump to operate.

Waterloo Flat Bed Biofilters are constructed of strong yet lightweight fibreglass shells. Flat Bed Biofilters easily blend in with landscaping and require only a single pump to operate.

Waterloo Basket Biofilters are constructed of a rigid steel mesh coated for corrosion protection. Basket Biofilters are placed in a below-ground concrete tank and are ideal for larger homes or increased nitrogen removal.

Waterloo HDPE Tank Biofilters are constructed using very durable below-ground high-density polyethylene tanks. HDPE Tank Biofilters are ideal for difficult access sites and increased nitrogen removal.

Proved and Approved

The Waterloo Biofilter has been thoroughly tested and proven effective by numerous 3rd party verification programs. We pride ourselves on the high treatment levels our technology consistently demonstrates.

Is *yours* a Waterloo?

CAN/BNQ Certification

	Median Concentration	Percent Removal
$cBOD_5$	4 mg/L	98%
TSS	4 mg/L	> 98%
Fecal Coliforms	17,900 cfu/100mL	> 99%

ETV Verification

	Median Concentration	Percent Removal
$cBOD_5$	7 mg/L	96%
TSS	5 mg/L	97%
Total Nitrogen	13 mg/L	65%

TOWN OF CALEDON
PLANNING
RECEIVED

Jul 12, 2021

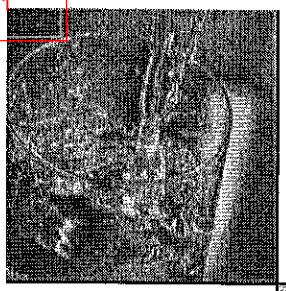

Culligan®

Culligan® Aqua-Cleer® Advanced Drinking Water Systems Owners Guide

TOWN OF CALEDON
PLANNING
RECEIVED
Jul 12, 2021

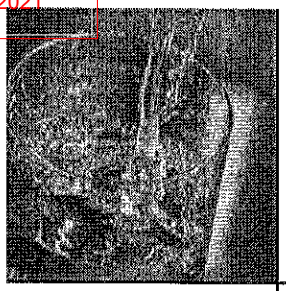

About Your System

Thank you for choosing a Culligan Aqua-Cleer advanced drinking water system. Your new system is designed to bring you years of deliciously crystal-clear Culligan water. The best part is it comes right from the tap. No more lugging around bottles or waiting for pitchers to slowly fill up. With your continuous supply of great tasting water, not only can you get your 8 glasses a day but you can easily use it for cooking, coffee, juice, baby formula, ice cubes, anything you use water with.

The important thing to remember is to change out your filters on a regular basis. The quality of your water is only as good as the quality of your filters. Each filter is designed to last for 1,000 gallons (roughly 12 months). Membranes will last longer if used with pre-filtration. A flow monitor is available with your system to let you know when you have consumed 1,000 gallons of water through your system. If you did not purchase one with your system, you may consider asking your Culligan man about having one installed. Faucets with reminder lights are also available.

System Specifications:

Dimensions	Filter Assembly Standard Storage Tank Medium Storage Tank Large Storage Tank	13.8" wide x 4.2" deep x 15.5" high 9" diameter x 14" high 11" diameter x 14" high 15.5: diameter x 24" high
Storage Tank Capacity	Standard Medium Large	2 gallons 3 gallons ✓ 9 gallons
Reverse Osmosis Efficiency Rating	Standard Medium Large	16.86% 16.86% ✓ 16.86%
Reverse Osmosis Recovery Rating	Standard Medium Large	33.49% 33.49% ✓ 33.49%

Filtration Options:

Sequence of Filtration	Type of Filtration	Specification
Pre-Filtration	Sediment	1 2 3
	Carbon	Block Granulated Active Carbon Granulated Active Carbon - Large
Membrane	Reverse Osmosis	30 gpd ✓ 50 gpd*
	Nano Filtration†	30 gpd

* Cartridges not for sale in California.

† Cartridges not for sale in California or Iowa.

TOWN OF CALEDON
PLANNING
RECEIVED

Jul 12, 2021

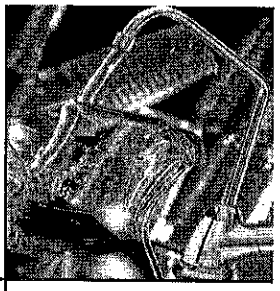

Sequence of Filtration	Type of Filtration	Specification
Advanced Filtration	Total Defense Arsenic	Speciality Carbon Block Specialty Media [1]
	Perchlorate*	Specialty Media [1]
Post-Filtration	Carbon	Granulated Activated Carbon Block

* Cartridges not for sale in California

[1] Specialty media cartridges must be installed after the RO membrane and system must have a Performance Indicator Device (PID) installed to track gallon usage.

Purpose of each level of filtration:

Pre-Filtration:

Pre-filtration for this system is used to reducing large contaminants from the water before they reach either the reverse osmosis or nano filtration membrane. The use of pre-filtration cartridges helps extent the membrane's life. There are two types of pre-filtration available with this system: sediment filtration and carbon filtration.

Sediment Filtration: Sediment is defined as sand, dirt, silt, fine sand and or coarse sand that can be found in many water supplies.

Carbon Filtration: Carbon is used to reduce chlorine taste and odor. Most people often describe this taste as being slightly chemical or they equate their drinking water to that of the local pool. Municipalities use chlorine to disinfect the water on the way to your home. This is a necessary step to delivering safe water to your home but depending on the level of chlorine by the time it reaches your home the taste of your water may be unpalatable.

Membrane Technologies:

The Aqua-Cleer system can utilize two different membrane technologies; reverse osmosis and nano filtration. Each one of these technologies use a tightly woven membrane that acts as a barrier to contaminants. Water is pushed up against this membrane at pressure. Depending on the weave of the membrane only a certain percentage of contaminants can pass through. Reverse Osmosis can reduce up to 99% of contaminants. The reason you may choose nano filtration versus reverse osmosis is often a question of taste. Some of the things that give water its taste are minerals such as calcium and magnesium. A nano filtration membrane will leave more of those minerals in the water.

Advanced Filtration:

The advanced filtration cartridges are specifically designed to reduce contaminants that reverse osmosis membranes are not efficient in removing.

TOWN OF CALEDON
PLANNING
RECEIVED

Jul 12, 2021

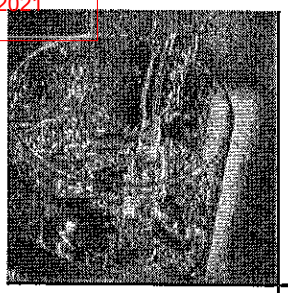

About Your System (con't)

Total Defense: OPTIONAL 5 Stage system only.

The Total Defense cartridge should be added to your system to deal with lead, mercury, aesthetic chloramines, aesthetic chlorine taste and odor, cysts, Volatile Organic Compounds (VOC) and MTBE.

- Chloramines have a stronger taste and are more difficult to remove than chlorine.
- Mercury is a toxin that can cause kidney damage.
- Lead is a toxin that can cause kidney problems or high blood pressure in adults and developmental problems in children.
- Cysts are a common cause of health issues. They can be found in some municipal water sources but more often found in wells under the influence of surface water.
- VOC is a name given to a wide range of organic contaminants, some are known to be carcinogenic.
- MTBE was used in gasoline to reduce emissions and is considered harmful.

Perchlorate*:

Perchlorate is a by-product of munitions manufacturing (common in solid rocket fuel, road flares, etc) that can be found in some water sources.

Arsenic:

Arsenic (As) is found naturally in some well water. Arsenic in water has no color, taste or odor. It must be measured by a lab test. Public water utilities must have their water tested for arsenic. You can get the result from your water utility. If you have your own well, you can have the water tested by an accredited lab. The local health department or the state environmental health agency can provide a list of certified labs. Culligan International is one such lab. For more information please contact your local Culligan dealer. For additional information about the arsenic in water can be found through the EPA's website at www.epa.gov/safewater/arsenic.html.

There are two forms of arsenic: pentavalent arsenic (As (V)) and trivalent arsenic (As (III)). Special sampling procedures are needed for a lab to determine what type and how much of each type of arsenic is in the water. In well water, arsenic may be pentavalent, trivalent, or a combination of both. Reverse osmosis membranes are effective at reducing pentavalent arsenic but not trivalent arsenic. The Arsenic specific cartridge was specifically designed to reduce trivalent arsenic.

* Cartridges not for sale in California.

TOWN OF CALEDON
PLANNING
RECEIVED

Jul 12, 2021

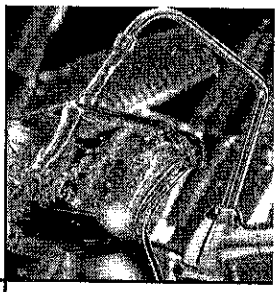

Performance Data Sheet (con't)

Carbon Block (CB)

The Carbon Block pre-filter has been tested according to NSF/ANSI 42 for the reduction of the substances listed below. The concentration of the indicated substances in the water entering the system was reduced to a concentration less than or equal to the permissible limit for water leaving the system, as specified in NSF/ANSI 42.

Substance	Influent Challenge Concentration	Maximum Permissible Product water Concentration	Reduction Requirements	Minimum Reduction	Average Reduction
Standard 42					
Aesthetic Chlorine	2.0 mg/L + 10%		>50%	97.6%	97.3%

Granular Activated Carbon (GAC)

The Granular Activated Carbon has been tested according to NSF/ANSI 42 for the reduction of the substances listed below. The concentration of the indicated substances in the water entering the system was reduced to a concentration less than or equal to the permissible limit for water leaving the system, as specified in NSF/ANSI 42.

Substance	Influent Challenge Concentration	Maximum Permissible Product water Concentration	Reduction Requirements	Minimum Reduction	Average Reduction
Standard 42					
Aesthetic Chlorine	2.0 mg/L + 10%		>50%	79.4%	64.4%

Granular Activated Carbon - Large (GAC-L)

The Granular Activated Carbon - Large has been tested according to NSF/ANSI 42 for the reduction of the substances listed below. The concentration of the indicated substances in the water entering the system was reduced to a concentration less than or equal to the permissible limit for water leaving the system, as specified in NSF/ANSI 42.

Substance	Influent Challenge Concentration	Maximum Permissible Product water Concentration	Reduction Requirements	Minimum Reduction	Average Reduction
Standard 42					
Aesthetic Chlorine	2.0 mg/L + 10%		>50%	86.1%	80.3%

TOWN OF CALEDON
PLANNING
RECEIVED
Jul 12, 2021

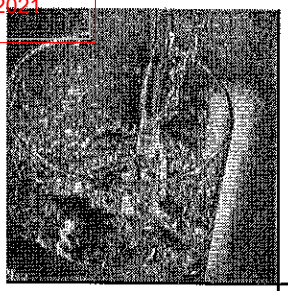

Performance Data Sheet (con't)

Total Defense (TD) ✓ S Shower only.

The Total Defense has been tested according to NSF/ANSI 42 and 53 for the reduction of the substances listed below. The concentration of the indicated substances in the water entering the system was reduced to a concentration less than or equal to the permissible limit for water leaving the system, as specified in NSF/ANSI 42 and 53.

Substance	Influent Challenge Concentration	Maximum Permissible Product water Concentration	Reduction Requirements	Minimum Reduction	Average Reduction
Standard 42					
Aesthetic Chlorine	2.0 mg/L + 10%		>50%	97.6%	98.0%
Aesthetic Chloramines	3.0 mg/L + 10%	0.5 mg/L		97.6%	98.0%
Particulate (0.5 - < um) Class I	At least 10,000 particles/mL		>85%	99.9%	99.9%
Standard 53					
MTBE	0.015 + 20%	0.005 mg/L		74.6%	83.3%
Cyst [t]	Minimum 50,000/L		99.95%	99.99%	99.99%
Turbidity	11 mg/L + 1 NTU	0.5 NTU		96.6%	98.0%
Lead (pH 6.5)	0.15 mg/L + 10%	0.010 mg/L		99.3%	99.3%
Lead (pH 8.5)	0.15 mg/L + 10%	0.010 mg/L		99.3%	99.3%
Mercury (pH 6.5)	0.006 mg/L + 10%	0.002 mg/L		96.6%	96.6%
Mercury (pH 8.5)	0.006 mg/L + 10%	0.002 mg/L		72.4%	95.4%
Chloro-form (VOC surrogate chemical)	0.300 mg/L + 10%	0.015 mg/L		95.2%	91.0%

Flow Rate = 0.5 gpm (1.89 Lpm)
Capacity = 1,000 gallons (3786 L)
t Based on the use of microspheres or Cryptosporidium parvum oocysts
Testing was performed under standard laboratory conditions, actual performance may vary.

TOWN OF CALEDON
PLANNING
RECEIVED
Jul 12, 2021

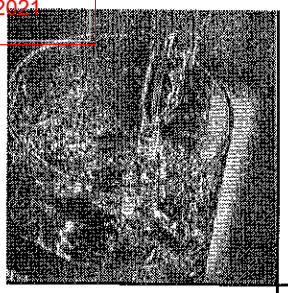

Performance Data Sheet (con't)

RO30 with TD

These systems have been tested and certified by NSF International according to NSF/ANSI 42, 53, and 58 for the reduction of the substances listed below. The concentration of the indicated substances in water entering the system was reduced to a concentration less than or equal to the permissible limit for water leaving the system, as specified in NSF/ANSI 42, 53, and 58.

This system is acceptable for treatment of influent concentrations of no more than 27 mg/L nitrate and 3 mg/L nitrite in combination measured as N and is certified for nitrate/nitrite reduction only for water supplies with a pressure of 280 kPa (40 psig) or greater.

Substance Reduction[1]

Substance	Influent Challenge Concentration mg/L	Maximum Permissible Product water Concentration mg/L	Reduction Requirements	Minimum Reduction	Average Reduction
Arsenic (pentavalent)[2]	0.050 +/- 10%	0.01			97.4%
Barium	10.0 +/- 10%	2			98.3%
Cadmium	0.03 +/- 10%	0.005			98.7%
Hexavalent Chromium	0.30 +/- 10%	0.05			91.2%
Trivalent Chromium	0.30 +/- 10%	0.05			97.8%
Copper	3.00 +/- 10%	1.3			98.9%
Fluoride	8.0 +/- 10%	1.5			95.6%
Lead	0.15 +/- 10%	0.010			98.7%
Nitrate/Nitrite (both as N)	30 +/- 10%			83.1%	86.8%
Nitrate[5]	27.0 +/- 10%	10.0		83.4%	87.0%
Nitrite	3.0 +/- 10%	1.0		79.5%	84.8%
Radium 226/2283	25pCi/L +/- 10%	5pCi/L			80.0%
Selenium	0.10 +/- 10%	0.05			96.0%
Cyst[4]	>50,000/mL		99.95%	99.99%	99.99%
Turbidity	11 +/- 1 NTU	0.5 NTU			99.00%

1 While testing was performed under standard laboratory conditions, actual performance may vary depending on water pressure, temperatures and other substances, which may be found in your water.
2 This system has been tested for the treatment of water containing pentavalent arsenic (also known as As(V), As(+5) or arsenate) at concentrations of 0.050 mg/L or less. This system reduces pentavalent arsenic, but may not remove other forms of arsenic. This system is to be used on water supplies containing a detectable free chlorine residual at the system inlet or on water supplies that have been demonstrated to contain only pentavalent arsenic. Treatment with chloramines (combined chlorine) is not sufficient to ensure complete conversion of trivalent arsenic to pentavalent arsenic. Please see the Arsenic Facts Sheet for further information.
3 Based upon testing methods using Barium as a surrogate. All concentrations in pCi/L pico curie/L.
4 Includes Giardia lamblia, Entamoeba histolyca and Cryptosporidium.
5 Units are not certified on water supplies with a pressure less than 40 psi (280 kPa). A booster pump is strongly recommended.

TOWN OF CALEDON
PLANNING
RECEIVED

Jul 12, 2021

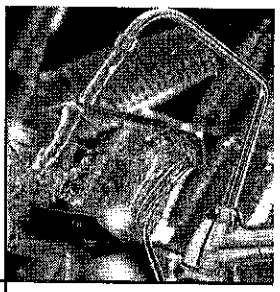

Performance Data Sheet (con't)

Total Defense (TD)

The Total Defense has been tested according to NSF/ANSI 42 and 53 for the reduction of the substances listed below. The concentration of the indicated substances in the water entering the system was reduced to a concentration less than or equal to the permissible limit for water leaving the system, as specified in NSF/ANSI 42 and 53.

Substance Reduction[1]

Substance	Influent Challenge Concentration mg/L	Maximum Permissible Product water Con-centration mg/L	Reduction Require-ments	Minimum Reduction	Average Reduction
Standard 42					
Aesthetic Chlorine	2.0 mg/L + 10%		>50%	97.6%	98.0%
Aesthetic Chloramines	3.0 mg/L + 10%	0.5 mg/L		97.6%	98.0%
Particulate (0.5 - < um) Class I	at least 10,000 particles/mL		>85%	99.9%	99.9%
Standard 53					
MTBE	0.015 + 20%	0.005 mg/L		74.6%	83.3%
Cyst †	Minimum 50,000/L		99.95%	99.99%	99.99%
Turbidity	11 mg/L + 1 NTU	0.5 NTU		96.6%	98.0%
Lead (pH 6.5)	0.15 mg/L + 10%	0.010 mg/L		99.3%	99.3%
Lead (pH 8.5)	0.15 mg/L + 10%	0.010 mg/L		99.3%	99.3%
Mercury (pH 6.5)	0.006 mg/L + 10%	0.002 mg/L		96.6%	96.6%
Mercury (pH 8.5)	0.006 mg/L + 10%	0.002 mg/L		72.4%	95.4%
Chloroform (VOC surro-gate chemical)	0.300 mg/L + 10%	0.015 mg/L		95.2%	91.0%

Flow Rate = 0.5 gpm (1.89 Lpm)
Capacity = 1,000 gallons (3786 L)
† Based on the use of microspheres or Cryptosporidium parvum oocysts
Testing was performed under standard laboratory conditions, actual performance may vary
Organic Chemicals included in Surrogate Testing:
Applies to Total Defense (TD) only

TOWN OF CALEDON
PLANNING
RECEIVED
Jul 12, 2021

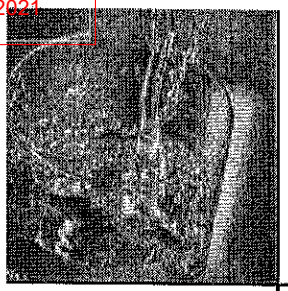

Performance Data Sheet (con't)

4 Stage

The Aqua-Cleer Advanced Drinking Water System with CB, GAC, or GAC-L cartridge has been tested and certified by NSF International against NSF/ANSI Standard 42 for the effective reduction of aesthetic Chlorine Taste and Odor, the TD cartridge for the effective reduction of aesthetic Chlorine Taste and Odor and Nominal Particulate Class 1 and against CSA B483.1.

NSF C US

5 Stage

The Aqua-Cleer Advanced Drinking Water System with TD cartridge has been tested and certified by NSF International against NSF/ANSI Standard 53 for the effective reduction of Cyst, Lead, Mercury, VOC, MTBE and Turbidity and against CSA B483.1.

The Aqua-Cleer Advanced Drinking Water System with RO30 or RO50* has been tested and certified by NSF International against NSF/ANSI Standard 58 for the effective reduction of TDS, pentavalent arsenic, barium, cadmium, hexavalent and trivalent chromium, copper, lead, nitrate/nitrite, radium 226/228 and selenium. The concentration of the indicated substances in water entering the system was reduced to a concentration less than or equal to the permissible limit for water leaving the system as specified in NSF/ANSI 58 and against CSA B483.1.

The Aqua-Cleer Advanced Drinking Water System with AS3 has been tested and certified by NSF International against NSF/ANSI Standard 53 for the effective reduction of arsenic (trivalent and pentavalent) when following an RO and against CSA B483.1.

Refer to your Installation and Operating Instructions and printed limited Warranties for more specific product information. To avoid contamination from improper handling and installation, your system should only be installed and serviced by your Culligan Man. Performance will vary based on local water conditions. The substances reduced by these systems are not necessarily in your water.

*RO50 not for sale in California.

TOWN OF CALEDON
PLANNING
RECEIVED

Jul 12, 2021

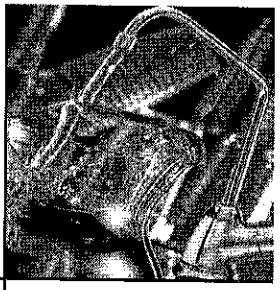

Culligan Lifetime Limited Warranty

Culligan Aqua-Cleer Advanced Drinking Water System

You have just purchased one of the finest drinking water systems made. As an expression of our confidence in Culligan products, your drinking water system is warranted to the original end-user, when installed in accordance with Culligan International Company specifications, against defects in material and workmanship from the date of original installation, as follows:

• **For the LIFETIME of the original end-user**	**The entire reverse osmosis water conditioning unit, EXCLUDING THE EXPENDABLE FILTER CARTRIDGES AND REVERSE OSMOSIS MEMBRANE FILTER USED IN THE UNIT.**
• **For a period of ONE YEAR**	**The Culligan brand reverse osmosis membrane filter.**

If a part described above is found defective within the specified period, you should notify your independently operated Culligan dealer and arrange a time during normal business hours for the dealer to inspect the drinking water system on your premises. Any part found defective within the terms of this warranty will be repaired or replaced by the dealer. You pay only freight from our factory and local dealer charges.

Damage caused by accident, fire, flood, freezing, Act of God, misuse, misapplication, neglect, alteration, installation or operation contrary to our printed instructions, or by the use of accessories or components which do not meet Culligan specifications, is not covered by this warranty.

Our product performance specifications are furnished with each drinking water system. TO THE EXTENT PERMITTED BY LAW, CULLIGAN DISCLAIMS ALL IMPLIED WARRANTIES INCLUDING, WITHOUT LIMITATION, WARRANTIES OF MERCHANTABILITY AND FITNESS FOR PARTICULAR PURPOSE; TO THE EXTENT REQUIRED BY LAW, ANY SUCH IMPLIED WARRANTIES ARE LIMITED IN DURATION TO THE ONE-YEAR PERIOD SPECIFIED ABOVE FOR THE PARTS DESCRIBED IN THIS LIMITED WARRANTY. As manufacturer, we do not know the characteristics of your water supply or the purpose for which you are purchasing a drinking water system. Please understand that the quality of water supplies may vary seasonally or over a period of time, and that your water usage rate may vary as well. Water characteristics can also change considerably if your drinking water system is moved to a new location. For these reasons, we assume no liability for the determination of the proper equipment necessary to meet your requirements, and we do not authorize others to assume such obligations for us. Further, we assume no liability and extend no warranties, express or implied, for the use of this product on a non-potable water source. OUR OBLIGATIONS UNDER THIS WARRANTY ARE LIMITED TO THE REPAIR OR REPLACEMENT OF THE FAILED PARTS OF THE DRINKING WATER SYSTEM, AND WE ASSUME NO LIABILITY WHATSOEVER FOR DIRECT, INCIDENTAL, CONSEQUENTIAL, SPECIAL, GENERAL, OR OTHER DAMAGES, WHETHER FROM CORROSION OR OTHER CAUSES.

CONSUMERS:
Some states do not allow limitations on how long an implied warranty lasts, so the above limitation may not apply to you. Similarly, some states do not allow the exclusion of incidental or consequential damages, so the above limitation or exclusion may not apply to you. This warranty gives you specific legal rights, and you may also have other rights which vary from state to state. Consult your telephone directory for your local independently-operated Culligan dealer, or write Culligan International Company, for warranty and service information.

Culligan International Company
9399 W. Higgins Road, Suite 1100
Rosemont, Illinois 60018

01020485C

©2010 Culligan International Company

TOWN OF CALEDON
PLANNING
RECEIVED

Jul 12, 2021

APPENDIX I

MECP Well Record Search

TOWN OF CALEDON
PLANNING
RECEIVED
Jul 12, 2021

Well ID	Zone	Easting	Northing	First Use	Second Use	Final Status
4908977	17	579679	4849026			Abandoned-Other
7226686	17	579410	4849408			Abandoned-Other
7226687	17	579458	4849364			Abandoned-Other
7227270	17	579267	4849590			Abandoned-Other
7244358	17	579305	4849431			Abandoned-Other
4900935	17	580130	4849589	Not Used		Abandoned-Supply
4901017	17	579561	4849643			Abandoned-Supply
4902928	17	580334	4849763			Abandoned-Supply
4902973	17	580414	4849923			Abandoned-Supply
7104809	17	579297	4849532	Domestic		Abandoned-Supply
7109610	17	579143	4848750	Not Used		Abandoned-Supply
7225052	17	579813	4848777	Monitoring and Test Hole		Monitoring and Test Hole
4906840	17	579466	4848761	Not Used		Observation Wells
4906842	17	579567	4848299	Not Used		Observation Wells
4906845	17	579466	4848759	Not Used		Observation Wells
4906846	17	579180	4849396	Not Used		Observation Wells
4906847	17	579567	4848301	Not Used		Observation Wells
4906848	17	579584	4848324	Not Used		Observation Wells
7225053	17	579814	4848771	Monitoring		Observation Wells
6712134	17	578800	4848946	Not Used		Test Hole
7140490	17	579080	4848673	Test Hole		Test Hole
7225054	17	579491	4848283	Test Hole		Test Hole
7225055	17	579995	4849204	Test Hole		Test Hole
7225056	17	579614	4848788	Test Hole		Test Hole
7225057	17	580008	4849203	Test Hole		Test Hole
7226632	17	579631	4849072	Test Hole		Test Hole
4906841	17	579469	4848760	Not Used		Unfinished
4900936	17	580155	4849605	Domestic		Water Supply
4900937	17	580329	4849762	Domestic		Water Supply
4900938	17	580347	4849883	Domestic		Water Supply
4901005	17	580366	4849130	Domestic		Water Supply
4901006	17	579779	4849344	Livestock	Domestic	Water Supply
4901007	17	579352	4849464	Domestic		Water Supply
4901008	17	579460	4849367	Domestic		Water Supply
4901009	17	578984	4848882	Public		Water Supply
4901010	17	579304	4849391	Domestic		Water Supply

TOWN OF CALEDON
PLANNING
RECEIVED
Jul 12, 2021

4901011	17	579622	4849394	Domestic		Water Supply
4901012	17	579011	4849211	Domestic		Water Supply
4901016	17	579285	4849524	Domestic		Water Supply
4901018	17	579581	4849479	Domestic		Water Supply
4901020	17	579076	4849263	Domestic		Water Supply
4901021	17	578822	4848994	Domestic		Water Supply
4901022	17	579329	4849559	Domestic		Water Supply
4901023	17	578871	4849235	Domestic		Water Supply
4901025	17	579347	4849667	Domestic		Water Supply
4901048	17	578747	4848905	Domestic		Water Supply
4902929	17	580334	4849753	Domestic		Water Supply
4902940	17	580524	4849773	Domestic		Water Supply
4902941	17	580524	4849793	Domestic		Water Supply
4902947	17	580364	4849723	Domestic		Water Supply
4902948	17	580234	4849683	Domestic		Water Supply
4903143	17	579089	4849323	Domestic		Water Supply
4903144	17	579139	4849533	Domestic		Water Supply
4903703	17	579614	4849823	Domestic		Water Supply
4903832	17	579314	4849473	Domestic		Water Supply
4903893	17	579564	4849763	Domestic		Water Supply
4904041	17	579374	4849613	Domestic		Water Supply
4904255	17	579712	4849856	Livestock	Domestic	Water Supply
4904256	17	579882	4849907	Domestic		Water Supply
4904407	17	578846	4848676	Domestic		Water Supply
4904412	17	580774	4849521	Domestic		Water Supply
4904488	17	580349	4849567	Domestic		Water Supply
4904489	17	580624	4849458	Domestic		Water Supply
4904555	17	579438	4849307	Domestic		Water Supply
4904661	17	580509	4849246	Domestic		Water Supply
4904662	17	580648	4849216	Domestic		Water Supply
4904689	17	580618	4849631	Domestic		Water Supply
4904724	17	580682	4849561	Domestic		Water Supply
4904725	17	580580	4849183	Domestic		Water Supply
4904726	17	580541	4849306	Domestic		Water Supply
4904727	17	580640	4849222	Domestic		Water Supply
4904728	17	580555	4849441	Domestic		Water Supply
4904750	17	579384	4849547	Domestic		Water Supply

TOWN OF CALEDON
PLANNING
RECEIVED
Jul 12, 2021

4904772	17	580617	4849298	Domestic		Water Supply
4904798	17	580670	4849458	Domestic		Water Supply
4904812	17	580541	4849360	Domestic		Water Supply
4904813	17	578861	4849089	Domestic		Water Supply
4904816	17	579434	4849486	Domestic		Water Supply
4904854	17	579373	4849527	Domestic		Water Supply
4904879	17	578914	4849123	Domestic		Water Supply
4904971	17	580464	4849323	Domestic		Water Supply
4904973	17	580664	4849573	Domestic		Water Supply
4905014	17	580549	4849543	Domestic		Water Supply
4905033	17	579164	4849523	Domestic		Water Supply
4905085	17	578914	4849273	Domestic		Water Supply
4905174	17	580414	4849423	Domestic		Water Supply
4905176	17	580784	4849463	Domestic		Water Supply
4905259	17	579114	4849323	Domestic		Water Supply
4905271	17	579364	4849623	Domestic		Water Supply
4905347	17	580364	4849473	Domestic		Water Supply
4905356	17	579064	4849123	Domestic		Water Supply
4905490	17	579514	4849523	Domestic		Water Supply
4905619	17	578914	4849273	Domestic		Water Supply
4905863	17	578864	4849023	Domestic		Water Supply
4905867	17	578814	4848873	Domestic		Water Supply
4906310	17	579338	4849346	Public		Water Supply
4906377	17	579397	4849397	Domestic		Water Supply
4906378	17	579513	4849315	Domestic		Water Supply
4906385	17	579728	4849854	Domestic		Water Supply
4906488	17	579324	4849607	Domestic		Water Supply
4906608	17	579325	4849619	Domestic		Water Supply
4906673	17	579338	4849346	Domestic		Water Supply
4906792	17	579549	4849813	Domestic		Water Supply
4906802	17	579320	4849612	Domestic		Water Supply
4906918	17	579035	4849190	Domestic		Water Supply
4906948	17	579627	4848237			Water Supply
4906996	17	579033	4849190	Domestic		Water Supply
4907142	17	579458	4849367	Domestic		Water Supply
4907143	17	579465	4848760	Domestic		Water Supply
4907305	17	579325	4849619	Domestic		Water Supply

TOWN OF CALEDON
PLANNING
RECEIVED
Jul 12, 2021

4907450	17	579342	4848016	Domestic		Water Supply
4907527	17	579431	4849421	Domestic		Water Supply
4907566	17	579432	4849369	Domestic		Water Supply
4907588	17	579513	4848057	Domestic		Water Supply
4907667	17	579467	4849324	Domestic		Water Supply
4907835	17	580054	4849565	Domestic		Water Supply
4907914	17	579020	4849145	Domestic		Water Supply
4907937	17	578605	4848620	Domestic		Water Supply
4908028	17	579359	4849439	Domestic		Water Supply
4908046	17	579773	4849928	Domestic		Water Supply
4908201	17	579212	4849382	Domestic		Water Supply
4908259	17	579615	4849394	Domestic		Water Supply
4908260	17	579070	4849102	Domestic		Water Supply
4908261	17	578985	4849116	Domestic		Water Supply
4908300	17	579279	4849618	Domestic		Water Supply
4908348	17	579255	4848557	Domestic		Water Supply
4908409	17	579237	4849428	Domestic		Water Supply
4908458	17	579548	4848006	Domestic		Water Supply
4908511	17	580573	4849178	Domestic		Water Supply
4908686	17	579519	4849115	Domestic		Water Supply
4908830	17	579562	4849797	Domestic		Water Supply
4908979	17	579679	4849026	Domestic		Water Supply
4909426	17	579463	4849114	Domestic		Water Supply
4909875	17	578977	4848892	Public		Water Supply
7106064	17	578821	4848647	Domestic		Water Supply
7206790	17	578914	4848423	Domestic		Water Supply
7206791	17	578897	4848407	Domestic		Water Supply
7224239	17	579530	4849753	Domestic		Water Supply
7255729	17	579229	4849417	Domestic		Water Supply
7259263	17	580086	4849091	Domestic		Water Supply
7259264	17	579801	4849157	Domestic	Test Hole	Water Supply
7259265	17	579945	4848906	Domestic	Test Hole	Water Supply
7259266	17	579789	4848906	Domestic	Test Hole	Water Supply
7259267	17	579692	4849093	Domestic		Water Supply
7259268	17	579469	4848667	Domestic	Test Hole	Water Supply

TOWN OF CALEDON
PLANNING
RECEIVED

Jul 12, 2021

APPENDIX J

Water Balance Analysis

TOWN OF CALEDON
PLANNING
RECEIVED

Jul 12, 2021

Pre-Development Monthly Water Balance Analysis - Thornthwaite and Mather model
Manors of Belfountain, Caledon, ON
Hydrogeological Investigation

Total Site Area (ha)	70.28	
Land Description Factors	**Area A (Agricultural)**	**Sub-Area B (Wooded)**
Topography	0.30	0.10
Soils	0.40	0.40
Cover	0.10	0.20
Sum (Infiltration Factor)	0.80	0.70
Soil Moisture Capacity (mm)	75	250
Site Area	50.27	20.01
Percentage of Total Site Area	72%	28%

100%

	Jan	Feb	Mar	Apr	May	Jun	Jul	Aug	Sep	Oct	Nov	Dec	Year
Climate Data (Data from Orangeville MOE Station, Ontario via Environment Canada Website - 2010 to 2015													
Average Daily Temperature (°C)	-8.3	-8.5	-1.8	5.3	13.3	17.0	19.9	18.5	14.3	8.1	2.1	-2.7	**6.4**
Precipitation (mm)	66.8	68.8	48.3	68.2	72.0	114.7	91.5	65.2	79.4	98.8	63.7	60.5	**897.8**
Evapotranspiration Analysis (Sub-Area A)													
Heat Index	0.0	0.0	0.0	1.1	4.4	6.4	8.1	7.2	4.9	2.1	0.3	0.0	**34**
Unadjusted Potential Evapotranspiration (mm)	0.0	0.0	0.0	25.0	65.2	84.5	99.5	92.1	70.8	38.9	9.4	0.0	**485**
Potential Evapotranspiration Adjusting Factor for Latitude	0.80	0.81	1.03	1.13	1.27	1.29	1.31	1.21	1.05	0.94	0.80	0.77	
Adjusted Potential Evapotranspiration (mm)	0	0	0	28	83	109	130	111	74	37	8	0	**580**
PET (Malstrom, 1969) (mm/month)	0	0	0	28	83	109	130	111	74	37	8	0	**580**
Precipitation - PET (mm)	67	69	48	40	-11	5	-39	-46	5	62	56	60	**318**
Accumulated Potential Water Loss (APWL)	0	0	0	0	-11	-6	-44	-90	-85	-23	0	0	**-259**
Storage (S)	75	75	75	75	65	70	42	23	24	55	75	75	
Change in Storage	0	0	0	0	-10	5	-28	-19.0	2	31	20	0	**0**
Actual Evapotranspiration (mm)	**0**	**0**	**0**	**28**	**82**	**109**	**120**	**84**	**74**	**37**	**8**	**0**	**542**
Recharge/Runoff Analysis													
Water Surplus (mm)	67	69	48	40	0	1	0	0	4	31	36	60	**356**
Potential Infiltration (I)	53	55	39	32	0	0	0	0	3	25	29	48	**285**
Potential Direct Surface Water Runoff (R)	**13**	**14**	**10**	**8**	**0**	**0**	**0**	**0**	**1**	**6**	**7**	**12**	**71**
Evapotranspiration (m^3)	0	0	0	14,125	41,395	54,891	60,079	42,359	37,269	18,454	3,790	0	272,363
Runoff (m^3)	6,714	6,920	4,851	4,030	0	58	0	0	364	3,113	3,663	6,080	35,793
Infiltration (m^3)	26,856	27,681	19,404	16,119	0	232	0	0	1,458	12,451	14,654	24,319	143,173

Evapotranspiration Analysis (Sub-Area B)													
Accumulated Potential Water Loss (APWL)	0	0	0	0	-11	-6	-44	-90	-85	-23	0	0	
Storage (S)	250	250	250	250	239	244	209	174	178	228	250	250	
Change in Storage	0	0	0	0	-11	5	-35	-35	4	50	22	0	**0**
Actual Evapotranspiration (mm)	**0**	**0**	**0**	**28**	**83**	**109**	**127**	**100**	**74**	**37**	**8**	**0**	**565**
Recharge/Runoff Analysis													
Water Surplus (mm)	67	69	48	40	0	0	0	0	2	12	34	60	**332**
Potential Infiltration (I)	47	48	34	28	0	0	0	0	1	8	24	42	**233**
Potential Direct Surface Water Runoff (R)	**20**	**21**	**14**	**12**	**0**	**0**	**0**	**0**	**0**	**4**	**10**	**18**	**100**
Evapotranspiration (m^3)	0	0	0	5622	16586	21850	25314	20088	14835	7346	1508	0	113149
Runoff (m^3)	4009	4132	2896	2406	0	11	0	0	93	715	2058	3630	19951
Infiltration (m^3)	9354	9641	6758	5614	0	25	0	0	218	1669	4803	8470	46552

Water Balance Total	**Inputs**	**Outputs**
Precipitation (mm)	897.8	
Soil Storage (mm)		0.0
Evapotranspiration+Evaporation (mm)		549
Infiltration (mm)		270
Runoff (mm)		79
Total	**897.8**	**897.8**

Water Balance T	**Inputs**	**Outputs**
Precipitation (m^3)	630980.9	
Soil Storage (m^3)		0.00
Evapotranspiration+Evaporation (m		385512
Infiltration (m^3)		189725
Runoff (m^3)		55744
Total	**630980.9**	**630980.9**

TOWN OF CALEDON
PLANNING
RECEIVED

Jul 12, 2021

Post-Development Monthly Water Balance Analysis - Thornthwaite and Mather model
Manors of Belfountain, Caledon, ON
Hydrogeological Investigation

Total Site Area (ha) 70.19

Land Description Factors	Area A (Residential)	Sub-Area B (Open Space)	Sub-Area C (Wooded)	Sub-Area D (Impervious)
Topography	0.30	0.30	0.10	NA
Soils	0.40	0.40	0.40	NA
Cover	0.05	0.15	0.20	NA
Sum (Infiltration Factor)	0.75	0.85	0.70	0.00
Soil Moisture Capacity (mm)	50	100	250	NA
Site Area	30.54	7.90	22.19	9.56
Percentage of Total Site Area	44%	11%	32%	14%

100%

	Jan	Feb	Mar	Apr	May	Jun	Jul	Aug	Sep	Oct	Nov	Dec	Year
Climate Data (Data from Orangeville MOE Climate Station, Ontario via Environment Canada Website - 2010 to 2015													
Average Daily Temperature (°C)	-8.3	-8.5	-1.8	5.3	13.3	17.0	19.9	18.5	14.3	8.1	2.1	-2.7	**6.4**
Precipitation (mm)	66.8	68.8	48.3	68.2	72.0	114.7	91.5	65.2	79.4	98.8	63.7	60.5	**897.8**
Evapotranspiration Analysis (Sub-Area A)													
Heat Index	0.0	0.0	0.0	1.1	4.4	6.4	8.1	7.2	4.9	2.1	0.3	0.0	**34**
Unadjusted Potential Evapotranspiration (mm)	0.0	0.0	0.0	25.0	65.2	84.5	99.5	92.1	70.8	38.9	9.4	0.0	**485**
Potential Evapotranspiration Adjusting Factor for Latitude	0.80	0.81	1.03	1.13	1.27	1.29	1.31	1.21	1.05	0.94	0.80	0.77	
Adjusted Potential Evapotranspiration (mm)	0	0	0	28	83	109	130	111	74	37	8	0	**580**
PET (Malstrom, 1969) (mm/month)	0	0	0	28	83	109	130	111	74	37	8	0	**580**
Precipitation - PET (mm)	67	69	48	40	-11	5	-39	-46	5	62	56	60	**318**
Accumulated Potential Water Loss (APWL)	0	0	0	0	-11	-6	-44	-90	-85	-23	0	0	**-259**
Storage (S)	50	50	50	50	40	45	21	8	9	32	50	50	
Change in Storage	0	0	0	0	-10	5	-24	-12.4	1	22	18	0	**0**
Actual Evapotranspiration (mm)	**0**	**0**	**0**	**28**	**82**	**109**	**116**	**78**	**74**	**37**	**8**	**0**	531
Recharge/Runoff Analysis													
Water Surplus (mm)	67	69	48	40	0	1	0	0	4	40	38	60	**367**
Potential Infiltration (I)	50	52	36	30	0	1	0	0	3	30	28	45	**275**
Potential Direct Surface Water Runoff (R)	**17**	**17**	**12**	**10**	**0**	**0**	**0**	**0**	**1**	**10**	**9**	**15**	**92**
Evapotranspiration (m^3)	0	0	0	8,581	25,037	33,348	35,289	23,705	22,642	11,211	2,302	0	162,115
Runoff (m^3)	5,099	5,255	3,684	3,060	0	64	0	0	332	3,022	2,886	4,617	28,019
Infiltration (m^3)	15,296	15,766	11,052	9,181	0	192	0	0	996	9,066	8,658	13,851	84,057

Evapotranspiration Analysis (Sub-Area B)													
Accumulated Potential Water Loss (APWL)	0	0	0	0	-11	-6	-44	-90	-85	-23	0	0	
Storage (S)	100	100	100	100	89	95	64	41	43	80	100	100	
Change in Storage	0	0	0	0	-11	5	-30	-24	2	37	20	0	**0**
Actual Evapotranspiration (mm)	**0**	**0**	**0**	**28**	**83**	**109**	**122**	**89**	**74**	**37**	**8**	**0**	**549**
Recharge/Runoff Analysis													
Water Surplus (mm)	67	69	48	40	0	0	0	0	3	25	36	60	**349**
Potential Infiltration (I)	57	59	41	34	0	0	0	0	3	21	30	51	**297**
Potential Direct Surface Water Runoff (R)	**10**	**10**	**7**	**6**	**0**	**0**	**0**	**0**	**0**	**4**	**5**	**9**	**52**
Evapotranspiration (m^3)	0	0	0	2220	6520	8626	9622	7022	5857	2900	596	0	43363
Runoff (m^3)	791	816	572	475	0	5	0	0	36	300	423	717	4135
Infiltration (m^3)	4484	4622	3240	2691	0	29	0	0	206	1698	2397	4061	23430

Evapotranspiration Analysis (Sub-Area C)													
Accumulated Potential Water Loss (APWL)	0	0	0	0	-11	-6	-44	-90	-85	-23	0	0	
Storage (S)	250	250	250	250	239	244	209	174	178	228	250	250	
Change in Storage	0	0	0	0	-11	5	-35	-35	4	50	22	0	**0**
Actual Evapotranspiration (mm)	**0**	**0**	**0**	**28**	**83**	**109**	**127**	**100**	**74**	**37**	**8**	**0**	**565**
Recharge/Runoff Analysis													
Water Surplus (mm)	67	69	48	40	0	0	0	0	2	12	34	60	**332**
Potential Infiltration (I)	47	48	34	28	0	0	0	0	1	8	24	42	**233**
Potential Direct Surface Water Runoff (R)	**20**	**21**	**14**	**12**	**0**	**0**	**0**	**0**	**0**	**4**	**10**	**18**	**100**
Evapotranspiration (m^3)	0	0	0	6235	18393	24230	28071	22277	16451	8146	1673	0	125476
Runoff (m^3)	4446	4582	3212	2668	0	12	0	0	104	793	2282	4025	22125
Infiltration (m^3)	10373	10691	7495	6226	0	28	0	0	242	1851	5326	9393	51624

Evaporation Analysis (Sub-Area D - Impervious)													
Evaporation Facotr (assume 20% of precipitation is evaporated from Impervious surfaces)	0.2	0.2	0.2	0.2	0.2	0.2	0.2	0.2	0.2	0.2	0.2	0.2	
Actual Evaporation (mm)	**13**	**14**	**10**	**14**	**14**	**23**	**18**	**13**	**16**	**20**	**13**	**12**	**180**
Recharge/Runoff Analysis													
Potential Infiltration (I)	0	0	0	0	0	0	0	0	0	0	0	0	**0**
Potential Direct Surface Water Runoff (R)	**53**	**55**	**39**	**55**	**58**	**92**	**73**	**52**	**64**	**79**	**51**	**48**	**718**
Evaporation (m^3)	1277	1316	923	1304	1377	2192	1750	1247	1518	1888	1218	1156	17166
Runoff (m^3)	5107	5264	3690	5214	5508	8768	6999	4988	6073	7554	4873	4625	68665
Infiltration (m^3)	0	0	0	0	0	0	0	0	0	0	0	0	0

Water Balance Total	Inputs	Outputs
Precipitation (mm)	897.8	
Soil Storage (mm)		0.00
Evapotranspiration+Evaporation (mm)		496
Infiltration (mm)		227
Runoff (mm)		175
Total	**897.8**	**897.8**

Water Balance	Inputs	Outputs
Precipitation (m^	630172.8	
Soil Storage (m^3)		0.00
Evapotranspiration+Evaporation (r		348119.8
Infiltration (m^3)		159110
Runoff (m^3)		122943
Total	**630172.8**	**630172.8**

TOWN OF CALEDON
PLANNING
RECEIVED

Jul 12, 2021

Water Budget Summary

Water Balance/ Water Budget Assessment

Characteristic	Site			
	Pre-Development	**Post-Development**	**Change (Pre- to Post-) (m3/yr)**	**Change (Pre- to Post-) (%)**
Input (mm)				
Precipitation (m^3/yr)	630981	630173	-808	-0.1%
Run-On (m^3/yr)	0	0	0	0.0%
Other Inputs (m^3/yr) - soil moisture	0	0	0	-39.2%
Total Inputs (m^3/yr)	**630981**	**630173**	-808	-0.1%
Outputs (Volumes)				
Precipitation Surplus (m^3/yr)			0	
Net Surplus (m^3/yr)			0	
Evapotranspiration (m^3/yr)	385512	348120	-37392	**-9.7%**
Infiltration (m^3/yr)	189725	159110	-30615	**-16.1%**
Total Infiltration (m^3/yr)	189725	159110	-30615	**-16.1%**
Runoff Pervious Areas (m^3/yr)			0	
Runoff Impervious Areas (m^3/yr)			0	
Total Runoff (m^3/yr)	55744	122943	67198	**120.5%**
Total Outputs (m^3/yr)	**630981**	**630173**	-808	-0.1%

TOWN OF CALEDON
PLANNING
RECEIVED

Jul 12, 2021

APPENDIX K

Caledon Road Salt Management Plan

TOWN OF CALEDON
PLANNING
RECEIVED

Jul 12, 2021

Staff Report 2019-0206

Meeting Date:	October 22, 2019
Subject:	Salt Management Plan 2019 Update
Submitted By:	Steven Dollmaier, Superintendent, Roads & Fleet, Finance & Infrastructure Services

RECOMMENDATION

That the Salt Management Plan 2019 Update attached as Schedule A to Staff Report 2019-0206, be approved; and

That a copy of the Salt Management Plan 2019 Update be provided to Environment Canada for information.

REPORT HIGHLIGHTS

- To inform Council on recent amendments and updates to the 2016 Salt Management Plan and report on the efforts to mitigate the negative effect which salt has on the environment, vulnerable areas, municipal infrastructure and public/private property.

DISCUSSION

Road Salts are used in Canada as de-icing and anti-icing chemicals for winter road maintenance, and less commonly as summer dust suppressants.

Under the Canadian Environmental Protection Act, 1999, the Federal Government of Canada published a “Code of Practice for the Environmental Management of Road Salts” (the “Code of Practice”) in 2004. The Code of Practice is designed to help municipalities and other road authorities better manage of the use of road salts to reduce the environmental impact while maintaining road safety.

A comprehensive five-year scientific assessment by Environment Canada in 2005, determined that in sufficient concentrations, road salts pose a risk to plants, animals and the aquatic environment. A Risk Management Strategy for Road Salts was subsequently developed to outline the measures that Environment Canada proposes in order to manage the risks associated with the application and use of road salts.

The Code of Practice recommends that road authorities prepare salt management plans that identify actions they will take to improve salt management practices including storage, general use on roads and snow disposal. Environment Canada has completed their Five-year Review of Progress and has stated that the Code of Practice has been effective in increasing the use of best practices for managing road salts in Canada. The Code of Practice and Review were developed in consultation with a Multi-Stakeholder Working Group for Road Salts.

TOWN OF CALEDON
PLANNING
RECEIVED

Jul 12, 2021

Existing Salt Management Plan

In 2005, the Town prepared its first Salt Management Plan which was subsequently adopted by Council and submitted to Environment Canada. Since the last update in 2016, a number of changes have taken place that warrant an update to the Town's Salt Management Plan. These changes can be summarized as follows:

- Updated road inventory;
- Eliminated the application of winter sand on urbanized roads within the Town;
- Reduced material application rates based on a 2018 Salt Vulnerability Study published by OGRA/Conservation Ontario;
- Updated Salt Vulnerable Areas;
- Updated to reflect changes to Ontario's Minimum Maintenance Standards (MMS) for roads. A further update in 2020 will be required for MMS changes related to sidewalks and parking lots.

The above changes are detailed in the Salt Management Plan 2019 Update attached as Schedule A to this report (Staff Report 2019-0206).

The Town's Salt Management Plan is activity-based and follows an Environmental Management System framework. It includes the following elements:

- Periodic review and analysis of legislative requirements and industry practices;
- Implementation and documentation of the Salt Management Plan;
- Education and training of staff;
- Monitoring and analysis of operations;
- Management review and revisions;
- Environmental review;
- Policy and practices revisions.

The implementation and improvement of the Town's Salt Management Plan will promote the continuous development of practices and procedures to improve winter maintenance activities while striving to reduce the effects of road salt on the environment. The Salt Management Plan is a dynamic and living document and it will be reviewed and refined on an on-going basis and will function at all levels of the organization. All personnel related to winter maintenance have a role in ensuring that the Salt Management Plan is implemented, monitored, improved and updated.

In order to provide a safe transportation network and meet Environment Canada's goal of managing the use of salt for winter maintenance, it is recommended that the Proposed

TOWN OF CALEDON
PLANNING
RECEIVED

Jul 12, 2021

Caledon Salt Management Plan, as amended and attached as Schedule A to this report, be adopted.

The Salt Management Plan 2019 Update, attached as Schedule A to this report will replace the Town of Caledon's Salt Management Plan adopted by Council in 2016.

FINANCIAL IMPLICATIONS

There are no immediate financial implications to this report.

COUNCIL WORK PLAN

Improved Service Delivery - improve roads and long term plan to maintain roads to standard.

ATTACHMENTS

Schedule A: Salt Management Plan 2019 Update

TOWN OF CALEDON
PLANNING
RECEIVED

Jul 12, 2021

TOWN OF CALEDON

Salt Management Plan

2019 Update

TOWN OF CALEDON
PLANNING
RECEIVED

Jul 12, 2021

Table of Contents

Salt Management Plan 1
1.0 Introduction 1
1.1 Overview 1
1.2 The Purpose of the Document 2
1.3 Legislation 2
2.0 Salt Management Policy 3
2.1 Vision, Mission, Mandate 3
2.2 Policy Statement 3
2.3 Application 3
2.4 Principles 3
3.0 Current Weather Maintenance Program and Policies 4
3.1 Introduction 4
3.2 Town of Caledon Program and Policies 4
3.3 Winter Patrol 5
3.4 Level of Service 6
3.5 Material Usage 7
3.6 Equipment 7
3.7 Yard Facilities 8
3.8 Snow Removal and Disposal 8
3.9 Weather Monitoring and Communications 9
3.10 Training and Documentation 9
4.0 Salt Management Plan 11
4.1 Overview 11
4.2 Winter Maintenance Policies 11
4.3 Optimization of Winter Maintenance and Patrol Routes 12
4.4 Equipment Calibration 12
4.5 Equipment Washing 13
4.6 Material Ordering, Delivery, Storage, and Handling 13
4.7 Material Record Keeping 15
4.8 Weather Forecasting 16

TOWN OF CALEDON
PLANNING
RECEIVED

Jul 12, 2021

4.9 Storm Response 17
4.10 Snow Disposal Sites 17
4.11 Winter Patrol and Level of Service 18
4.12 Snow and Ice Control Training 19
4.13 Communications Strategy 19
5.0 Monitoring and Updating 21
Glossary of Terms .....
References .....
Appendix A .....
Appendix B .....
Appendix C .....

TOWN OF CALEDON
PLANNING
RECEIVED

Jul 12, 2021

Salt Management Plan

1.0 Introduction

1.1 Overview

In response to concerns over the impacts of road salt on the environment, Environment Canada published in April 2004 the Code of Practice for the Environmental Management of Road Salts in the Canada Gazette stating that road salts are on the Priority Substance List compiled under the Canadian Environmental Protection Act, 1999. The Code of Practice was developed by Environment Canada through a multi-stakeholder consultation and includes practices relating to:

- Salt storage;
- Snow disposal; and
- Salt application with all the environmental impacts considered.

This code applies to organizations that:

- Use more than 500 tonnes of road salts per year (five-year rolling average); and
- Have vulnerable areas that could be potentially impacted by road salts.

Any organization which meets the criteria listed in the code is required to prepare a Salt Management Plan (SMP) and file an annual report with Environment Canada by June 30th each year. The implementation of the SMP is to begin in the financial period of fiscal year immediately following the preparation of the plan.

Since the Town of Caledon meets the criteria listed in the Code of Practice for the Environmental Management of Road Salts the Town has developed this plan to outline their strategies to manage salt use. The maintenance of Caledon's roadways during the winter season is both challenging and costly due to the large area, variety of road types, and diverse topography. Municipal staff currently utilize a salt/sand mix as their main tool in maintaining a safe and efficient roadway systems during the winter season. An efficient winter maintenance plan has many benefits to the community, including but not limited to:

- Providing efficient effective transportation routes for emergency services, residents of all mobility levels, and commuters;
- Lower automobile collision rates;
- Lower associated insurance and liability claims;
- Saving time and fuel from faster travel, better traction, and reduced congestion;
- Minimize productivity losses due to late days and absenteeism;
- Avoidance of lost sales due to inaccessibility or unavailability; and
- Lower the cost of commodities by reducing the transportation costs.

These benefits have also shown to have benefit/cost ratios[1] between 2:1 and 18:1. For every dollar spent on winter maintenance activities two to eighteen dollars are derived in benefits.

An effective winter maintenance plan must include methods to provide safe roadway conditions and to ensure that the right amount of salt is used in the right place at the right time. Reduction

[1] TAC Road Salt (NaCl) Management Guide, Transportation Association of Canada, December 1999.

TOWN OF CALEDON
PLANNING
RECEIVED

Jul 12, 2021

of salt usage may also be achieved through improved training, new techniques, new technologies, as well as improvements in the type of anti-icing/de-icing materials used.

The SMP is considered to be a "living" document. Once developed, the Town of Caledon will be required to undertake a formal annual review with the goal of improving their winter maintenance operations. This review will also require new technologies be investigated where appropriate, trial/pilots can be conducted and monitored to determine the cost/effectiveness of incorporating new developments into the capital and current budget planning.

1.2 The Purpose of the Document

This SMP is intended to set out a policy and procedural framework for ensuring that the Town of Caledon continuously improves on the effective delivery of winter maintenance services and the management of road salt used in winter maintenance operations, as outlined in the Code of Practice for the Environmental Management of Road Salts.

The SMP is meant to be dynamic to allow the Town to evaluate and phase in any changes, new approaches and technologies in winter maintenance activities in a fiscally sound manner. At the same time any modifications to Caledon's winter maintenance activities must ensure that roadway safety is not compromised.

As specified in the Code of Practice for the Environmental Management of Road Salts, the SMP is endorsed by the "highest level of government". Therefore, Town Council will be requested to endorse this plan.

1.3 Legislation

The minimum standards for winter maintenance are mandated under provincial legislation. The standards set within the Town of Caledon are currently at the same level or higher than the minimum standards specified in the Ontario Regulation 239/02 of the Municipal Act, 2001. As well, the Town is mandated under provincial legislation to maintain public roads in a good state of repair.

The Code of Practice for the Environmental Management of Road Salts, under the Canadian Environmental Protection Act, 1999 recommends that the Salt Management Plan follow the best management practices that have been set out by the Transportation Association of Canada. This Code of Practice was prompted by subsection 54 (1) of the Act which allows the Ministry of the Environment to issue codes of practice respecting pollution prevention or specifying procedures, practices or release limits for environmental control relating to works, undertakings and activities during any phase of their development and operation.

TOWN OF CALEDON
PLANNING
RECEIVED

Jul 12, 2021

2.0 Salt Management Policy

2.1 Vision, Mission, Mandate

Vision:	The Town of Caledon will be recognized as a leader in improving winter maintenance operations while reducing environmental impacts and ensuring public safety.
Mission:	The Town of Caledon Finance & Infrastructure Services Department will continue to optimize the use of deicers on all Town Roads while striving to minimize salt impacts to the environment.
Mandate:	The Town of Caledon Finance & Infrastructure Services Department will provide safe winter traveling surface conditions for vehicular and pedestrian movements as required by the level of service policies and funding established by Council.

2.2 Policy Statement

The Town of Caledon will provide efficient and effective winter maintenance to ensure the safety of users of the road network in keeping with applicable Provincial Legislation and accepted standards while striving to minimize adverse impacts to the environment. These commitments will be met by:

- Adhering to the procedures contained within the SMP;
- Monitoring, reviewing, and upgrading the SMP on an annual basis to incorporate new technologies and/or new developments and to ensure the effectiveness of the Plan;
- Committing to ongoing winter maintenance staff training and education; and
- Council allocating sufficient financial resources.

2.3 Application

The SMP is to be endorsed by the Town Council of Caledon, and the SMP, as adopted, will apply to all Caledon Finance & Infrastructure Services Department employees who are involved in winter maintenance operations.

2.4 Principles

To allow for the continued progression of the SMP several principles will be set in place to guide decision making. These include:

- Implementation and documentation of the plan;
- Education and training of staff;
- Monitoring and analysis;
- Yearly management review; and
- Practices and policy revision.

TOWN OF CALEDON
PLANNING
RECEIVED

Jul 12, 2021

3.0 Current Weather Maintenance Program and Policies

3.1 Introduction

This chapter is intended to provide a brief overview of the present activities, conditions, and policies currently in place for the Town of Caledon as it relates to winter maintenance. The major activities related to winter maintenance are:

- Snow Plowing
- Salt/Sand Application
- Salt/Sand Storage
- Snow Removal
- Snow Storage
- Sidewalk Plowing & De-icing.

3.2 Town of Caledon Program and Policies

Overall the Town is responsible for the maintenance and construction of some 1591.66 lane km of road which is 912.41 lane km are paved; 339.6 lane km are surface treated; and 239.74 lane km is gravel. In turn, the Town roads have been classified (Class 1, 2, 3, 4, 5 and 6) based on the posted/regulated speed and annual average daily traffic (ADT) in order that levels of service and maintenance standards can be clearly defined and accepted by the community at large.

Within these classifications:

- Class 1, 2, and 3 roadways are considered as an arterial in nature;
- Class 4 roadway is considered as a collector in nature; and
- Class 5 and 6 roadways are considered local streets.

Table 3.1 provides a breakdown of the road system by urban/rural and class of road.

Road Class	Lane Km of Roadway		
	Rural	Urban	Total
1	0.00	7.70	7.70
2	0.00	1.97	1.97
3	242.08	29.65	271.73
4	496.94	118.16	615.10
5	194.18	345.63	539.45
6	24.19	130.54	154.73

Table 3.1: Road Classification, Town of Caledon

In compliance with the applicable law, the Town is utilizing the Minimum Maintenance Standards for Municipal Highways (Ontario Regulation 239/02 made under the Municipal Act). Staffs have established winter level of service and maintenance guidelines that have been accepted by the community at large.

For winter operations, these regulations specify for each class of highway:

- Patrol frequency; and

TOWN OF CALEDON
PLANNING
RECEIVED

Jul 12, 2021

- Clearance of snow/ice.

In addition, Town staff provides winter maintenance services for some 91.7km of sidewalks and paths within the communities of:

- Alton;
- Bolton;
- Caledon East;
- Caledon Village;
- Inglewood;
- Mayfield West; and
- Palgrave.

Council has approved a Level of Service for Winter Operations, Sidewalk Maintenance (Appendix A) which provides for all sidewalks and pathways to be cleared within 48 hours following a storm event. With back to back storms, priority service is focused on priority 1 routes which exceed and ADT of 1000 or within 500m of schools. Once normal operations are restored, all remaining secondary routes would be plowed.

Also, approximately 39 community and Town Hall parking lots, fire, and police facilities are maintained and cleaned of ice and snow during the winter season.

3.3 Winter Patrol

Commencing on October 1st, winter maintenance operations and patrol coverage are maintained around the clock 7 days a week until April 30th each year. As well, the Road Supervisors and alternates will remain on call with a protocol in place to mobilize staff in response to storm and weather conditions.

Table 3.2 outlines the minimum patrol frequency established for each class of highway within Regulation 239/02.

Routine Patrolling Frequency	
Class of Highway	**Patrolling Frequency**
1	Three times every 7 days
2	Two times every 7 days
3	Once every 7 days
4	Once every 14 days
5	Once every 30 days

Table 3.2 Routine Patrolling Frequency

At the present time Town staff covers all roads at least once within a 1 to 2-week time period. To supplement the Town patrol, Region of Peel staff also provides patrol coverage on all regional roads within Caledon and maintain contact with Town staff to advise changing weather and/or pavement conditions.

TOWN OF CALEDON
PLANNING
RECEIVED

Jul 12, 2021

3.4 Level of Service

The target timeframe to restore an asphalt roadway to bare pavement will vary depending on the winter traffic, volume, highway type, and surrounding landscape. Some highways that are sheltered from wind and sun, with low volumes of traffic, may remain snow packed longer than others, however winter road maintenance is still completed on these roads to ensure compliance with Ontario Standards.

Bare pavement standard target by highway class:

Highway Class	Vehicles per day	Bare Pavement Standard
Freeway/Urban Highway (Class 1)	More than 10,000	Bare pavement within eight hours of the end of a winter storm.
Major Highway (Class 2)	2,001-10,000	Bare pavement within 16 hours of the end of a winter storm.
Intermediate Highway (Class 3)	1,0001-2,000	Bare pavement within 24 hours of the end of a winter storm.
Minor Highway (Class 4)	501-1,000	Centre bare pavement within 24 hours of the end of a winter storm; fully bare pavement when conditions permit. (Centre bare means a 2.5m strip in the middle of the road.)
Local Highway (Class 5)	Fewer than 500	Snow packed driving surface within 24 hours of the end of a winter storm. Excess snow is plowed off and sand is applied where required to improve friction.

Table 3.3 was created referencing bare pavement standards from (Ontario Ministry of Transportation, 2019)

These Levels of Service are intended to meet the roadway needs of residential, commercial, and commuter traffic at an economic cost under most road and weather conditions.

While this section's Levels of Service are for Caledon roads, it is acknowledged that conditions may occur which temporarily prevent achieving the Levels of Service assigned. In such cases, attempts should be made to keep roadways open by utilizing all resources available at maximum efficiency.

Salt should never be applied to snow packed gravel surface roadways or surface treated roads. This is because salt aids thawing of the snow pack during sunny periods, this increases the occurrence and severity of potholes in the snow pack and the gravel surface of the roadway. Make note about how salt will deteriorate the flexibility of the road.

TOWN OF CALEDON
PLANNING
RECEIVED

Jul 12, 2021

3.5 Material Usage

In 2018-2019, the stockpile contained 100 percent salt for use on paved surfaces; while winter sand and three (3) percent salt mix was used to prevent freezing on gravel roads.

During the 2018/2019 winter season, salt brine was used as a pre-wetting agent in conjunction with on board pre-wet equipment. Moving forward in the 2019/2020 winter season the Town will be using treated salt instead of prewetting to ensure that all material is used the same and is not dependent on the ability of the piece of equipment or the operator to complete.

The use of calcium chloride for dust control during the summer months is a function of the number of gravel roads and general weather conditions. A continuation of the current program of paving rural gravel roads will achieve a reduction in calcium chloride usage. In 2019 the Town successfully surface treated 56.4 lane km of road. This will not only improve the driving experience for the roadway user but, will also improve the Town's ability to winter maintain and reduce the amount of salt used in those areas. Table 3.4 portrays the chloride material usage over the past 5-year period

Winter Season	Salt Tonnes	Salt/Sand Mix Tonnes	Sand Tonnes	Liquid Liters
2018 - 2019	11729	4725	4500	182661
2017 - 2018	7119	6300	6000	182661
2016 - 2017	11183	7725	7500	151538
2015 - 2016	7679.94	5150	5000	288000
2014 - 2015	5972	5000	2000	25000

Table 3.4 Material Usage

3.6 Equipment

For winter maintenance the Town's fleet consists of:

- 5 Light Duty Pick Up Trucks for parking lot maintenance;
- 7 Trackless machines for sidewalk maintenance;
- 4 Loaders;
- 2 Backhoe;
- 4 Graders;
- 14 Tandem combination spreader/plow/wing units; and
- 13 Single Axle combination spreader/plow units

This equipment is garaged at Yards 1 and 2.

Prior to each winter season the fleet undergoes a preseason mechanical review to determine road worthiness; the appropriate winter equipment is installed, and safety checked.

The Town has also equipped vehicles with computerized spreader controllers, air and pavement temperature sensors, and automatic vehicle location devices to maximize route and material application efficiency.

TOWN OF CALEDON
PLANNING
RECEIVED

Jul 12, 2021

The tandem combination spreader/plow/wing units and the single axle combinations spreader/plow units are equipped with PolarFlex carbide blades and Highware Blades which maximizes snow removal efficiency while still ensuring the protect the wearing surface of the roadway.

All spreader units are tested and calibrated prior to each winter season and are tested periodically to ensure the right amounts of material are being applied.

3.7 Yard Facilities

The Town currently has 3 yards:

- Yard 1, Castlederg Road
- Yard 2, Quarry Road; and
- Yard 3, Highway 50/Columbia Way.

Table 3.7 provides a summary audit of these facilities. While Yard 3 does not contain winter material storage, it is used as a vehicle storage and mobilization area for winter operations.

There is a lack of containment cells for the existing salt brine tanks to contain leaks or a major tank rupture. Yard grading and paving of the outdoor circulation area would improve surface drainage and minimize ponding in all three yards. Plans are underway for Yard 1 and 2 for site improvements in the future which would accommodate these deficiencies. Ongoing Yard grading is completed at all locations. There is currently no set timeline for paving at any location.

3.8 Snow Removal and Disposal

The removal of snow from Town roadways and facilities is undertaken when the accumulation of snow impacts public safety, emergency access routes, street parking in commercial areas, vehicular and pedestrian traffic, and/or parking lot capacity. As well, cul-de-sacs having little or no capacity to store snow are candidates for snow removal.

Location	Ground Conditions		Run off		Surrounding Land Used
	Paved	Unpaved	Controlled	Uncontrolled	
Highway 50 and Columbia Way		Yes		Yes	East – Highway 50 West – Conservation lands North – Yard 3 South – Nursery/Residential

Table 3.5 Snow Disposal Site

Over the course of a normal winter some 300 truckloads of snow are hauled to one of the two sites:

- Vacant lands on the south side of Yard 3; and
- Region of Peel site, located in Alton (Porterfield Road/Peel regional Road 136)

TOWN OF CALEDON
PLANNING
RECEIVED

Jul 12, 2021

Table 3.5 describes the general site conditions for the Town's snow storage area south of Yard 3. The storage site at Highway 50/Columbia Way accommodates the snow storage from the eastern sector of the Town. For the western sector, staff currently relies on the Peel Regional facility in Alton. Currently, the Region is reviewing their snow storage sites from an environmental perspective with a view to initiating best practices for the continued storage of snow and/or finding new storage sites.

3.9 Weather Monitoring and Communications

To supplement the Town road patrol information, staff interfaces with emergency service providers and Regional patrollers who monitor regional roads within Caledon. Staff are emailed 4 times per day from the Town's weather monitoring contractor with hourly and daily weather coverage. Staff also accesses the Weather Network website for event and forecast weather information. Weather forecasts are posted, as updates are received, at each yard so that staff who do not have access to the electronic copies are kept informed of the changes in the weather.

Infra-red thermometers (IRT's) mounted on all of the winter maintenance fleet are capable of measuring pavement temperatures which further improves the storm response capabilities. All winter maintenance vehicles are equipped with two-way radios and staff is responsible for reporting changing weather and/or road conditions. External communication with the general public ranges from media press releases to responding to individual inquires through the Town's customer service centre.

3.10 Training and Documentation

The Finance & Infrastructure Services Department provides training for the Town's maintenance staff annually. Each year the Superintendent, Roads & Fleet together with the key staff within the Department assesses the needs and available resources required for the winter maintenance staff training programs. All current winter maintenance staff have successfully completed training modules to effectively deal with ice/snow control. The Town continues to update their training modules to ensure that all winter road maintenance staff are current with the Regulatory requirements and industry best practices. Training is completed in both a classroom setting as well as hands on practical training.

Prior to each winter season, senior staff convene a full day winter focus session with staff to review the goals and objectives for the upcoming winter season, reinforce procedures and protocols, discuss equipment, material and timing requirements, assignment of tasks and schedules, health and safety issues, and clarify questions or any areas of concern. During the winter season daily meetings are held with the operators at the start of each shift to review operations, areas of concern, upcoming forecasted weather events, and compliance issues. All hazards, areas of concern, and equipment notes are tracked in the Town's electronic asset and work order management system, hard copy tracking forms, as well as on white boards in the office of each yard to provide operators with the most up to date information possible. In addition, operator training courses and external winter maintenance seminars for supervisors and staff have been provided in the past.

Key staff maintains documentation on:

TOWN OF CALEDON
PLANNING
RECEIVED

Jul 12, 2021

- Vehicle call numbers by staff;
- Employee/yard/key contacts;
- Sidewalk and walkway winter maintenance route inventory;
- Roadway snow plow routes; and
- Parking lot inventory.

On a daily basis, winter response details are summarized as outlined in Appendix B Daily Activity Sheet that supervisors, patrollers, and operators are required to complete and hand in. Town staff also retains records for the purchase of salt, salt brine, and winter sand. Staff utilized the download capabilities of the electronic controller on their spreaders to obtain detailed spread data by routes and winter events.

Staff have developed winter patrol routes which ensure that all areas are patrolled in a timely manner. These patrol routes are a series of representation roads and areas of winter concern. These routes are patrolled in addition to the daily patrols completed by staff. This is to ensure that the most area is covered in the shortest amount of time during a winter weather event to relay up to date road condition information to supervisory staff.

TOWN OF CALEDON
PLANNING
RECEIVED

Jul 12, 2021

4.0 Salt Management Plan

4.1 Overview

This chapter will present the elements of the SMP for the Town of Caledon. The plan will outline the steps required to effectively manage road salt for winter maintenance activities within the Town, and will cover the following areas:

- Winter maintenance policies;
- Optimization of Winter Maintenance and Patrol Routes
- Equipment upgrading, calibration and washing;
- Materials ordering, delivery, storage, handling, and record keeping;
- Weather forecasting;
- Storm response;
- Snow removal and disposal;
- Snow and ice control training;
- Technology review;
- Communications strategy; and
- Environmentally sensitive areas.

These plans are not meant to be a comprehensive consideration of every possible best management practice, yet rather a listing of improvements that are seen to be beneficial and feasible considering current conditions. Each element within the plan will cover:

- The activity intent and current situation;
- The goals;
- The timetable for achieving the stated goals;
- The environmental impacts; and
- Performance measures.

The following provides the elements of the SMP pertaining to the Town of Caledon:

4.2 Winter Maintenance Policies

General	• It is intended that the various policies relating to the winter maintenance program be reviewed on an annual basis to determine whether any revisions are required or warranted. • Staff has established the level of service and maintenance operating guidelines in accordance with Minimum Maintenance Standard for Municipal Highways. Which have been accepted by the community; Council has also adopted a level of service policy for the winter maintenance of Town sidewalks and paths. • Staff will continue to work in compliance with the Minimum Maintenance Standards for Municipal Highways.
Goal/Timetable	• Winter maintenance operating guidelines will be reviewed annually and updated as needed. If changes are required, Council endorsement is to be obtained.

TOWN OF CALEDON
PLANNING
RECEIVED

Jul 12, 2021

Environmental Impacts	• Winter maintenance operating guidelines outline controls to be implemented to manage and prevent negative environmental impacts. Some examples would be a containment site for salt and salt brine storage facilities; another would be researching and testing more environmentally friendly alternatives to the deicer that the Town currently uses. Winter maintenance operating procedures are the foundation for program delivery and can have a significant impact on the environment.
Performance Measure	• Updating SMP annually; • # of Standard operating guidelines for winter maintenance reviewed annually; and • # of training sessions to staff on operating procedures guidelines.

4.3 Optimization of Winter Maintenance and Patrol Routes

General	• As the development of the Town increases the winter road maintenance and patrol routes will be modified to ensure maximum efficiency for snow and ice removal and monitoring.
Goal/Timetable	• Updating maintenance and patrol routes prior to November 1st each year.
Environmental Impacts	• Minimizing the fuel used by equipment and lowers the emissions from equipment.
Performance Measure	• Maximizing the number of kilometers covered in the shortest amount of time ensuring that areas of concern are also included in the routes for both patrolling and maintenance.

4.4 Equipment Calibration

General	• Properly calibrating equipment is important to the effective placement of deicer material on Town roadways. • The spreaders are being calibrated and the spreader routes are benchmarked. • The Ontario Good Roads Association's (OGRA) Good Practices for Winter Maintenance in Salt Vulnerable Areas are being reviewed to determine how best to apply them to the existing and updated maintenance routes.
Goal/Timetable	• All spreaders are to be calibrated and all routes benchmarked each year (i.e. calculate the theoretical material spread /km). During the winter season as the equipment comes in for maintenance the spreader units are to be checked and recalibrated as needed. As a minimum the calibration setting should be rechecked mid-winter. • All spreader operators to understand the reasons for the calibrations and how to operate the equipment correctly.

TOWN OF CALEDON
PLANNING
RECEIVED

Jul 12, 2021

	• Reviews of spreader rates and material application practices completed at annual winter operations meeting.
Environmental Impacts	• Effective equipment calibration and maintenance will ensure that the proper volume of de-icing salts is spread onto the roadway, reducing the usage of road salt.
Performance Measure	• Spreaders calibrated by November 1st of each year. • Routes benchmarked by November 1st of each year. • Number of spreaders checked/recalibrated each year. • Comparisons are to be developed over the winter season: ○ Material spread rates across routes, across vehicle units and across operators; of each spread and vehicle unit; and of actual spread ratio performance against industry spread rates.

4.5 Equipment Washing

General	• Reduce the amount of chlorides, oil, grease, and grit that is discharged into the environment. • All the equipment is washed outside. • Building revisions are being explored for Yard 2 to accommodate washing of equipment indoors and collection of all wash runoff.
Goal/Timetable	• All equipment washing will be brought inside to minimize any discharge into the environment. • Obtain proper curtains to minimize contaminants being released into the environment. • At the conclusion of each storm cycle, all vehicles involved in winter maintenance activities are to be washed and placed in readiness for the next storm event.
Environmental Impacts	• The treatment of wash water by removing chlorides, and oil/grease to suitable levels prior to discharge into the natural environment.
Performance Measure	• Percentage of vehicles washed indoors and passed through oil/water separator before being placed in readiness for the next shift.

4.6 Material Ordering, Delivery, Storage, and Handling

General	• Maintain best practices and procedures in the ordering, delivery of deicer materials, handling, and storage of winter maintenance materials. • In the fall season salt, winter sand, and salt brine is delivered and stockpiled at Yards 1 and 2.

TOWN OF CALEDON
PLANNING
RECEIVED

Jul 12, 2021

	• The salt and winter sand are stored in permanent structures at Yards 1 and 2. • Paved loading pads are used for delivery and loading/unloading the spreaders. • The loading pads however are not graded inwards, therefore not preventing any water from leaving the inside storage areas. • The inside storage areas are an impervious surface. • The structures are inspected each spring to identify and repair any deficiencies to the floor or exterior areas of the structures. • Repairs to the structures are scheduled and completed prior to the start of the following winter season. • Salt is the only material used on urbanized paved roads. • Three (3) percent salt is mixed with sand for use on rural gravel roads. • The mixing of materials occurs on paved surfaces at the Yards; all materials are transferred into a covered structure within 24 hours. • Liquid salt brine is stored in outdoor tanks at Yards 1 and 2. • The tanks do not have any secondary containment to protect against spills or leaks.
Goal/Timetable	• Tracking of inventory for materials on site, materials being taken to apply on roads, and materials being returned to the stock pile. • Complete tracking of material with every delivery from suppliers as well as during and after every winter weather event using operators, material tracking and equipment timesheets. • Minimize salt loss to the environment by taking the following measures: o Deliveries of salt and sand are covered with a waterproof tarp and occur in good weather. o Loading pads are swept clean following the transfer of the materials to storage. o Salt brine tanks have been inspected for leaks and transfer areas are in place to prevent major spills to accepting salt brine deliveries. o Storage tanks are protected against damage from vehicles. o Storage tanks possess automatic shut off valves. o Planning to install containment units for all liquid storage tanks. o All deliveries are to be recorded. o The initial stockpiling at each yard should be completed prior to October 31st of each year. During the initial stockpiling a sample to ascertain the material gradation and moisture content shall be completed and appropriate action taken should the samples fail. o Loading and unloading spreaders occurs on impervious surfaces. Any material spilled on the impervious surface is collected and conveyed back into the storage area. o Spreaders are not loaded beyond their capacity. o No frozen chunks of material are placed in the spreaders while loading; any frozen chunks are to be placed in a

TOWN OF CALEDON
PLANNING
RECEIVED

Jul 12, 2021

	corner of the storage area and allowed to thaw and dry prior to placing the material back in the stockpile. o Review area lighting daily and report any issues to Supervisor. o Document the inspection and repair of storage structures and report any issues to Supervisor. o When replacing a storage, a storage structure or adding a new structure the TAC Code of Practice for Design and Operation of Road Maintenance Yards shall be followed. • Grading and paving of the yard is required to improve drainage and direct overland run off to areas of runoff collection. • Review designs for secondary containment of the salt brine tanks as well as for drainage tanks for the salt storage areas.
Environmental Impacts	• Reducing amounts of salt being delivered and stored onsite. • Lowering the possibility of accidental material release into the environments surrounding the stockpile locations. • Improve housekeeping practices relating to the delivery, storage, and handling of salt will decrease the loss to the environment.
Performance Measure	• Tracking amount of inventory delivered and comparing it to the amount of material applied to roads and sidewalks. • Percentage of deliveries tarped/ordered in good weather. • Percentage of material put into inside storage within 24 hours. • Percentage of liquid material placed in containment tanks without incident. • Percentage of material deliveries passing gradation and moisture contents. • Loading pad thoroughly cleaned following transfer of material to storage. • Review compliance through a yard inspection following each winter.

4.7 Material Record Keeping

General	• Retain an accurate record of the amount of material used by route, vehicle, and storm event. • Material usage by route, vehicle, and storm summaries are reported by daily Operator logs. Material usage is rationalized by comparing the amount of material ordered with the residual inventory. • Staff have a process for downloading data from the electronic controllers; currently creating process to review and analyze data collected.
Goal/Timetable	• The material tracking system by vehicle, route, and storm. This information has been compared to the benchmark information collected in past years. By providing an accurate records of material usage, staff are able to ensure the amount of material to be spread is appropriate for varying climatic and road conditions.

TOWN OF CALEDON
PLANNING
RECEIVED

Jul 12, 2021

	• Staff continue to experiment with spread rates taking into consideration the OGRA Good Practices for Winter Maintenance in Salt Vulnerable Areas on vehicles equipped with prewet capability with the goal of reducing the amount of material spread. • On a seasonal basis the amount of material used versus the amount stored is to be reconciled with the deliveries and the daily usage records. • Staffs are to download data from the electronic controllers to assist in maintaining material records.
Environmental Impacts	• Accurate measurements, monitoring, and record keeping of salt use allows the Town to track the effectiveness of salt management programs and overall environmental performance to assist in identifying continual improvement strategies.
Performance Measure	• Records of material usage by winter event, route, and vehicle together with a year-end material reconciliation.

4.8 Weather Forecasting

General	• Provide timely and accurate weather information to assist in decision making. • Staff have access to various meteorological sources (Section 3.9). In addition to the weather forecast data, the Town's supervisory and patrol fleet are equipped with IRT's to measure pavement and air temperatures.
Goal/Timetable	• Continue to utilize the pavement and air temperature data from the IRT's to assist in decision making of when to apply material. • Continue to use meteorological services to obtain accurate weather forecasting information four (4) times daily through the winter season. • Ensure that the weather forecast data is made available to the appropriate supervisory staff and after-hours patrol staff. • Explore opportunities and options with the Region in providing enhanced forecasted and real time weather and pavement information on Town Roads.
Environmental Impacts	• The effective use of de-icing material is dependent on accurate weather information and informed decision making. Inaccurate weather information and/or misinformed decision making can result in untimely and/or unnecessary use of salt.
Performance Measure	• Delivery of clear, accurate weather forecast at least 4 times daily between November and April each year.

TOWN OF CALEDON
PLANNING
RECEIVED

Jul 12, 2021

4.9 Storm Response

General	• Provide criteria and guidelines to standardize staff response for various combinations of precipitation, pavement temperatures, and traffic volumes. • Staff react to visual patrols and weather reports from various sources to initiate the mobilization of the operators for plowing and de-icing actions. General guidelines are available to patrollers and operators for storm response. • The Town of Caledon has implemented 24/7 coverage for when winter events occur.
Goal/Timetable	• A 2 to 5-year goal will be to monitor the records of storm response in relation to the established guidelines to assess any necessary changes. • Understand and document storm response approaches for different storm scenarios and improve upon practices.
Environmental Impacts	• Snow and ice control decisions that are not consistent with actual road conditions will lead to inefficiencies and inappropriate material usage.
Performance Measure	• Accurate and complete record of winter event

4.10 Snow Disposal Sites

General	• Examine the Town's existing snow disposal site to reduce or eliminate the environmental impacts. • Collected snow is stored in the Town of Caledon's Yard 3. There has been no benchmark established to determine the levels of salt, oil/grease, and sedimentation at the Yard. The Region of Peel is in the process of assessing the environmental issues surrounding their snow storage areas.
Goal/Timetable	• Plan for monitoring of Yard 3 to determine the levels of salt, oil/grease, and heavy metals present. Monitoring would occur prior to, during, and immediately after the winter season. The results of the monitoring program would be used to initiate the mitigation of any adverse environmental impacts which have been identified. • Each spring, all litter and debris are collected from the snow storage area and disposed of. • Staff are to develop a long-term strategy for snow removal from Town facilities which may include the use of mechanical melters, new storage sites, revised criteria for removal, and site-specific storage design (i.e. ensure storage areas have impervious lines and melt water directed to a collection area prior to its release into a storm water system). • Best Practices for site operation and record keeping as it related to snow storage areas (Synthesis of Best Practices, Road Salt

TOWN OF CALEDON
PLANNING
RECEIVED

Jul 12, 2021

	Management, Transportation Association of Canada) are followed on an annual basis.
Environmental Impacts	• Review of the snow disposal site and the disposal operations together with a long-term strategy for snow removal operations can lead to a reduction of environmental impacts.
Performance Measure	• Compliance with Ministry of Environment and Climate Change regulations. • Monitoring of the surface water and soil to see if the it complies with the Ministry of Environment and Climate Change's specifications.

4.11 Winter Patrol and Level of Service

General	• It is intended that winter road conditions are monitored in an appropriate fashion to be able to react to changing weather and road conditions and to ensure that the levels of service for the monitoring public are maintained. • The Town provides a patrol to inspect and monitor roads conditions in compliance with the Provincial Minimum Maintenance Standards. • It should be noted that in providing 24-hour around the clock winter patrol between November and April each year, staff resources are stretched (in some cases beyond the limit) in dealing with "hot spots" between storms, response to public inquires, and adhering to. Regional patrol offices offer updates and information on road conditions which help to supplement in between shift changes at the Town. • Winter patrol is completed prior to and throughout the duration of a winter weather event by road supervisors and alternate staff.
Goal/Timetable	• The operating procedures are to be reviewed annually to ensure that the guidelines are consistent with the Town's level of service expectations. • Review and update annually patrol routes. • Provide training and retraining to supervisory and patrol staff annually. • Complete winter weather road patrol tracking forms prior to and throughout each winter weather event • Relay information to supervisory staff prior to and throughout winter weather events to ensure they are receiving the most up to date road condition statuses.
Environmental Impacts	• Accurate interpretation of conditions and appropriate levels of action to provide safe road conditions will result in timely and efficient application of winter de-icing materials, therefore, lowering the amount of salt on the roads.
Performance Measure	• Percentage of staff trained in snow and ice decision making.

TOWN OF CALEDON
PLANNING
RECEIVED

Jul 12, 2021

4.12 Snow and Ice Control Training

General	• All staff involved in snow and ice control and effective salt management are adequately trained. • Staff receives training on an annual basis which is geared to upcoming winter season, any legislative changes, and hands on training to ensure winter readiness.
Goal/Timetable	• All staff is trained, and their training is refreshed annually in snow and ice control including salt management practices, training modules are to be provided in the following areas: o Review of good housekeeping practices; o Interpretation of weather and pavement conditions; o Proper use of infrared thermometers; o When and how to apply chemicals; o Understanding of the environmental impacts; o Health and safety requirements, environmental concerns; and o Proper record keeping and review. o Appendix C provides Winter Treatment Chart Priority I & II
Environmental Impacts	• Good housekeeping practices, the measures of snow and ice control, proper training in salt management, and the expectations of program delivery will result in a greater probability of success with the salt management plan.
Performance Measure	• Percentage of staff receiving snow and ice control training.

4.13 Communications Strategy

General	• A communications strategy with respect to the Town's winter maintenance program is effectively communicated to not only staff but also the public. • The Town posts a brief winter road operations message on the time to clear roads following winter events. • Staffs have produced an Operations Manual which provides: o Key staff contact list with emergency telephone numbers. o Sand/salt, plow, and patrol routes. • The Town has partnered with the Region of Peel and the CVC to improve our communication strategies with municipalities and the public including education about the proper uses of road salt.
Goal/Timetable	• Develop a Communications Plan for Winter Maintenance by 2020. • Annually inform Council, public, and local regulatory agencies about Caledon's Salt Management Plan and current actions.

TOWN OF CALEDON
PLANNING
RECEIVED

Jul 12, 2021

	• Notify Environment Canada upon completion of the Salt Management Plan and update them annually on the status of Salt Management activities.
Environmental Impacts	• Increased awareness of the role and management of snow and ice control in winter maintenance operations will provide the area residents and staff with greater understanding of the challenges in combating winter storms.
Performance Measure	• Annual revision of Winter Maintenance and Control guidelines.

TOWN OF CALEDON
PLANNING
RECEIVED

Jul 12, 2021

5.0 Monitoring and Updating

The Salt Management Plan is intended as a starting point for the Town of Caledon to proceed with the implementation and continuance of best management practices for winter maintenance operations. The long-term goal of this plan is to protect the environment from excessive concentrations of road salts while at the same time, ensure that winter roads and their users are kept safe.

The Salt Management Plan proposes goals and estimated timelines for implementation by Caledon. Subject to endorsement and resource allocation by Council, the plan elements are to be programmed into the capital and operating budgets.

As well, in order that Environment Canada is kept abreast with the existence of a Salt Management Plan, its stage of implementation and the use of road salts, each municipality has been requested to submit a report by June 30th, 2004 and every June 30th thereafter.

TOWN OF CALEDON
PLANNING
RECEIVED

Jul 12, 2021

Glossary of Terms

Anti-icing: means the application of liquid deicers directly to the road surface in advance of a winter event.

Continuous Winter Event Response: is a response to a winter event with full deployment of manpower and equipment that plow/salt/sand the entire system.

De-icing: means the application of solids, liquids, pre-treated material to the road surface after the on-set of the winter event.

Highway: includes a common and public highway, street, avenue, parkway, driveway, square, place, bridge, viaduct or trestle, any part of which is intended for or used by the general public for the passage of vehicles and includes the area between the lateral property lines thereof.

Paved Road: is a road with an asphalt surface, concrete surface, composite pavement, or Portland cement.

Pre-treat: means the application of liquids (calcium chloride, sodium chloride, etc.) to dry sand or salt prior to being loaded for storage or applied to the road surface.

Pre-wetting: means the application of liquids (calcium chloride, sodium chloride, etc.) at the spinner of the truck just prior to application to the road surface.

Surface Treated Road: is a road with bituminous surface treatment comprised of one or two applications of asphalt emulsion and stone chips over a gravel road.

Spot Winter Event Response: is a response to a winter event with only a part deployment of manpower and equipment or with full deployment to only part of the system.

Unpaved Road: is a road where the surface is not paved i.e. gravel is the wearing surface.

Winter Event: is a weather condition affecting roads such as snowfall, wind-blown snow, freezing rain, frost, black ice, etc. to which a winter event response is required.

Winter Event Response: is a series of winter control activities performed in response to a winter event.

Winter Event Response Hours: are the total numbers of person-hours per year (plowing, salting/sanding, winging back, etc.) to respond to winter events.

TOWN OF CALEDON
PLANNING
RECEIVED

Jul 12, 2021

References

Ontario Good Roads Association (OGRA). (2018, June). *Good Practices for Winter Maintenance.* Retrieved from https://www.ogra.org/files/Combined%20SVA%20Document.pdf

O. Reg. 239/02: MINIMUM MAINTENANCE STANDARDS FOR MUNICIPAL HIGHWAYS. (n.d.). Retrieved from https://www.ontario.ca/laws/regulation/020239

Ontario Ministry of Transportation. (2019, August 13). *How Ontario's highways are cleared in winter.* Retrieved from http://www.mto.gov.on.ca/english/ontario-511/winter-highway-maintenance.shtml

TOWN OF CALEDON
PLANNING
RECEIVED

Jul 12, 2021

Appendix A

IN THIS SECTION:

- Staff Report 2004-31 Winter Operations Sidewalk Maintenance

TOWN OF CALEDON
PLANNING
RECEIVED

Jul 12, 2021

TOWN OF CALEDON

PUBLIC WORKS & ENGINEERING
OPERATIONS

Report 2004-31

To: Mayor and Members of Council

From: C. A. Campbell, C.E.T.
Acting Director, Public Works & Engineering

Meeting: October 26, 2004

Subject: WINTER OPERATIONS - SIDEWALK MAINTENANCE

RECOMMENDATION **Requires Action** [X] **For Information Only** [ ]

1. It is recommended that Council for the Corporation of the Town of Caledon adopt Public Works and Engineering Report 2004-31, Winter Operations – Sidewalk Maintenance;

2. That Public Works and Engineering continue to maintain the existing service level;

3. And that as our community grows, this service level should be re-evaluated to determine financial impacts.

ORIGIN/BACKGROUND

The Town provides winter operations on sidewalks and walkways for safe passage of members of the public.

A review of Town of Caledon service obligations was presented to Council in Infrastructure Report 2001-13, September 2001.

As a result of that report, Council directed that staff provide an expanded service for winter operations on all sidewalks in the Town of Caledon.

Costs for delivery of the existing service level, are in the order of $128,000.00.

Prior to the winter of 2001 residents were required by By-law 93-21 to remove snow and ice off sidewalks in front of their properties where the Town was not providing winter maintenance. Town staff were responsible for the enforcement of that by-law.

TOWN OF CALEDON
PLANNING
RECEIVED

Jul 12, 2021

TOWN OF CALEDON

DISCUSSION

Existing Service Delivery

Town staff currently provides winter maintenance on approximately 91 km of sidewalks and paths, based on priorities for areas of high pedestrian use, business areas, and routes for children walking to schools.

Existing sidewalks have been broken into two categories in the table below, primary and secondary routes. (See Appendix A for routes)

Sidewalk Plow Routes

Village	Primary Routes (m)	Secondary Routes (m)	Total (m)
Alton	3,949	0	**3,494**
Caledon East	5,500	3,568	**9,068**
Caledon Village	3,787	0	**3,787**
Inglewood	1,240	0	**1,240**
Mayfield West	3,897	3,897	**7,794**
Palgrave	2,886	0	**2,886**
North Bolton	6,605	9,910	**16,515**
Central Bolton	12,815	5,490	**18,305**
South Bolton	14,300	14,300	**28,600**
Total Distance	**54,524**	**55,320**	**91,689**
	54.5 km	55.3 km	91.7km

Service Delivery Option I

Service Delivery Option I would continue to provide winter maintenance on all sidewalk routes, with safe access depending on weather conditions, within 48 hours following a storm.

When back to back storm conditions dictate, priority service will be focussed on (priority routes) streets exceeding an average annual daily vehicular traffic of 1,000 or within 500m of schools. All remaining sidewalk routes (secondary routes) would be plowed once normal operations have been restored.

Under extreme weather conditions, Public Works and Engineering may postpone service on secondary routes.

TOWN OF CALEDON
PLANNING
RECEIVED

Jul 12, 2021

TOWN OF CALEDON

The service level for winter maintenance on municipal sidewalks is based on:

a) one side of the street on sidewalks and paths within settlement area boundaries,
b) both sides of the street on Regional Roads, and Queensgate Blvd,
c) not through parklands, or open spaces where street based links are available.

Where sidewalks exist on both sides of a street, the Public Works and Engineering Department will determine the most effective side to be clear based on safety, connectivity of routes, and maintenance demand.

Service Delivery Option II

Service Delivery Option II would provide winter maintenance only on the priority sidewalk routes, no service would be provided on the remaining secondary routes. Safe access to the priority routes would be provided depending on weather conditions within 48 hours following a storm.

Option II will provide safe pedestrian access on cleared sidewalks, however there will be sidewalks in the town that will not be maintained through the entire winter season. Residents will be required to clear the sidewalks adjacent to their property in accordance with By-law 93-21.

Risk Assessment

The *Municipal Act* provides that the municipality is liable in gross negligence if a personal injury is caused by the presence of snow or ice on the sidewalk. The Town of Caledon has received very few of these claims.

In the circumstances of this report, if Council were to select Service Delivery Option II, this would mean a reduction in the level of winter maintenance on sidewalks. Such a reduction would require the Town to notify those homeowners and pedestrians who are accustomed to sidewalks being cleared by the Town that this service is no longer being provided so that they have notice of the need to be more careful.

Preferred Service Delivery Option

Public Works and Engineering recommends winter maintenance on Town sidewalks and paths based on the service standard outlined in Option I. This option will continue to provide adequate safe pedestrian access to sidewalks, and mitigate the Town's risk associated with winter maintenance. Operationally this standard will be more efficient in deployment of resources decreasing non-productive "deadheading" from one location to another.

TOWN OF CALEDON
PLANNING
RECEIVED

Jul 12, 2021

TOWN OF CALEDON

Equipment Requirements for Service Delivery

For the past four years winter sidewalk maintenance has been delivered by Town staff using park turf lawn mowers equipped to clear and sand sidewalks. This strategy has resulted in a significant maintenance demand to keep the equipment operational during the winter season, and lead to a shortened life cycle of the equipment.

Staff researched equipment that could be effective for both summer turf and winter sidewalk maintenance, and concluded that no joint use piece of equipment could be recommended. Therefore it was not recommend that the park turf equipment purchased this year be outfitted with any attachments for winter sidewalk operations.

Rental equipment dedicated to winter sidewalk maintenance has been confirmed for the upcoming winter season.

FINANCIAL

Funding is included in the Operating Budget for delivery of winter operations sidewalk maintenance. The budget includes funding for equipment, and for manpower to deal with this service.

Staff estimate the total cost for delivery of Option I for winter operations sidewalk maintenance over the next season, depending on winter conditions, is in the order of $128,000.00.

Equipment @ $75,000.00
Manpower @ $45,000.00
Material @ $2,500.00
Miscellaneous repairs due to winter damage @ $5,500.00.

If alternative service delivery Option II is preferred, staff estimate that one piece of equipment and one operator would be removed from the operation. Savings for the reduced service level would be in the order of $24,500.00, for a total program cost in the order of $103,500.00.

Funding will need to be identified in the 2005 and future Operating Budgets to continue to provide winter operations on sidewalks to meet the Town's approved service standard and legal responsibility.

CALEDON COMMUNITY WORK PLAN

N/A

CONSULTATIONS

Town Counsel
Risk Management Committee
Public Works and Engineering Supervisory and Management Staff.

TOWN OF CALEDON
PLANNING
RECEIVED

Jul 12, 2021

TOWN OF CALEDON

POLICIES/LEGISLATION

Town of Caledon Service Standards

ATTACHMENTS

Priority sidewalk routes for 2004/2005 winter season.

CONCLUSION

The Town of Caledon has provided winter operations maintenance on all sidewalks for the last three seasons.

There are savings associated with Option II for winter operations maintenance on priority sidewalks. However, in the interests of safety, uniform service delivery and continuity of pedestrian access, Town of Caledon Public Works and Engineering staff recommend that the Corporation of the Town of Caledon endorse preferred Option I for winter operations maintenance on sidewalks across the entire Town.

Prepared by:
Robin L. Dunn, C.E.T., PAdm.
Manager of Public Works
Public Works & Engineering

Approved by:
C. A. Campbell, C.E.T.
Acting Director
Public Works & Engineering

TOWN OF CALEDON
PLANNING
RECEIVED

Jul 12, 2021

Appendix B

IN THIS SECTION:

- Town of Caledon Daily Activity/ Hours of Work Time Sheet

TOWN OF CALEDON
PLANNING
RECEIVED
Jul 12, 2021

TOWN OF CALEDON

Daily Activity/Hours of Work Timesheet

Start Time _____

Finish Time _____

Employee #	Employee Name:	Employee Signature:	Authorization:	Month Day Year

	HOURS			EQUIPMENT					
Location/Road Section	RT	OT	DT	#	Hours	Activity #	Activity Description	Work Units	Traffic Prot Plan

Comment:

MATERIALS	Description:	Unit:	Quantity:	Description:	Unit:	Quantity:

	HOURS			EQUIPMENT					
Location/Road Section	RT	OT	DT	#	Hours	Activity #	Activity Description	Work Units	Traffic Prot Plan

Comment:

MATERIALS	Description:	Unit:	Quantity:	Description:	Unit:	Quantity:

	HOURS			EQUIPMENT					
Location/Road Section	RT	OT	DT	#	Hours	Activity #	Activity Description	Work Units	Traffic Prot Plan

Comment:

MATERIALS	Description:	Unit:	Quantity:	Description:	Unit:	Quantity:

Personal Protective Equipment for all jobs includes: Safety Boots, Vests and Hard Hats

Hours of Work Daily Record Status – Day Starts at 7:00 a.m. 7-Day Cycle Declared (Daily Status Total Must Equal 24)

	7	8	9	10	11	12	13	14	15	16	17	18	19	20	21	22	23	24	1	2	3	4	5	6	7	Status Total
Off Duty																										
On Duty (Driving)																										
On Duty (Not Driving)																										
Pavement Temperature																										
	7	8	9	10	11	12	13	14	15	16	17	18	19	20	21	22	23	24	1	2	3	4	5	6	7	

Schedule A to Staff Report 2019-0206

TOWN OF CALEDON
PLANNING
RECEIVED
Jul 12, 2021

Work Activity Comments:

Winter Maintenance Materials							Drive Times - Route Activity Log		
Route	Salt	Salt/Sand	Sand	Brine	Other	Temperature & Weather	On Road	Off Road	Comments (on route, vehicle (equipment) conditions
Material Returned									
Total									

TOWN OF CALEDON
PLANNING
RECEIVED

Jul 12, 2021

Appendix C

IN THIS SECTION:

- Recommended Treatments for Level I – Bare Pavement
- Recommended Treatments for Level II – Snow Packed Roadway

TOWN OF CALEDON
PLANNING
RECEIVED
Jul 12, 2021

	TEMPERATURE RANGE (Celcius)	TYPE OF PRECIPITATION	ROAD SURFACE CONDITION	ACTIVITY	RECOMMENDED TREATMENTS FOR LEVEL I - BARE PAVEMENT LEVEL OF SERVICE		
					BEGINNING OF STORM	DURING STORM (1)	AFTER STORM (2)
1	Below -18° C.	Dry Snow	No Packing Dry Pavement	Plowing	YES: After 6 cm. of Snow Accumulation	YES: Continuously	YES: Bare Pavement/Wing Shoulders/Cleanup
				Sanding	YES: ONLY IF SLIPPERY	YES: After Plowing & ONLY IF SLIPPERY	YES: SLIPPERY SECTIONS ONLY
				Salting	NO	NO	YES: If Temperature Rising: To Bare or Assist In Baring Pavement
2	-18° C. to -12° C.	Dry Snow	No Packing Dry Pavement	Plowing	YES: After 6 cm. of Snow Accumulation	YES: Continuously	YES: Bare Pavement/Wing Shoulders/Cleanup
				Sanding	YES: ONLY IF SLIPPERY	NO	YES: SLIPPERY SECTIONS ONLY
				Salting	NO	NO	YES: If Temperature Rising: To Bare or Assist In Baring Pavement
3	-18° C. to -12° C.	Dry Snow	Packing	Plowing	YES: If Temp. Rising; After Salting YES: If Temp. Falling; After 6 cm. Accum.	YES: Continuously	YES: Bare Pavement/Wing Shoulders/Cleanup
				Sanding	YES: If Temp. Falling: Only If Slippery	YES: If Temperature Falling; After Plowing, ONLY IF SLIPPERY	YES: If Temperature Falling; SLIPPERY SECTIONS ONLY
				Salting	NO	YES: If Temperature Rising; As Necessary After Plowing	YES: If Temperature Rising: To Bare or Assist In Baring Pavement
4	-12° C. to -7° C.	Dry Snow	No Packing	Plowing	YES: After 6 cm. of Snow Accumulation	YES: Continuously	YES: Bare Pavement/Wing Shoulders/Cleanup
				Sanding	YES: If Temp. Falling: Only If Slippery	YES: After Plowing & ONLY IF SLIPPERY	YES: SLIPPERY SECTIONS ONLY
				Salting	NO	NO	YES: If Temperature Rising: To Bare or Assist In Baring Pavement
5	-12° C. to -7° C.	Dry Snow	Packing	Plowing	YES: 0.5 Hours After Salting	YES: Continuously	YES: Bare Pavement/Wing Shoulders/Cleanup
				Sanding	NO	YES: After Plowing & ONLY IF SLIPPERY	YES: SLIPPERY SECTIONS ONLY
				Salting	YES: If Temp. Rising; Before 1.0 cm. of Snow Accumulation	YES: As Necessary After Plowing	YES: If Temperature Rising: To Bare or Assist In Baring Pavement
6	Above -7° C.	Wet Snow	Packing Wet Pavement	Plowing	YES: 0.5 Hours After Salting	YES: Continuously	YES: Bare Pavement/Wing Shoulders/Cleanup
				Sanding	NO	YES: After Plowing & ONLY IF SLIPPERY	YES: SLIPPERY SECTIONS ONLY
				Salting	YES: Before 1.0 cm. of Snow Accum.	YES: As Necessary After Plowing	YES: To Bare or Assist in Baring Pavement
7	Above -7° C.	Sleet Or Freezing Rain	Possible Icing Wet Pavement	Plowing	NO	NO	YES: To Remove Any Slush Accumulation
				Sanding	NO	YES	YES: SLIPPERY SECTIONS ONLY
				Salting	YES: Only When Icing Starts	YES	YES: SLIPPERY SECTIONS ONLY

NOTES:
1. During storm conditions, plowing should be undertaken to ensure that the snow accumulation on the road surface DOES NOT EXCEED 6.0 cm. for Priority I Level of Service.
2. After the storm, plowing should continue to achieve Bare Pavement or to achieve baring of the centre 2.5 metres of pavement within 24 hours, whenever possible, then bared full width when favourable weather prevails. Winging back of the roadway shoulder areas should usually be done only ONCE after the storm.
3. Recommended treatment for various conditions shown on this chart should be used IN MOST CASES however, unusual circumstances may necessitate departure from the recommended treatment.
4. Temperature rising means temperature to remain in or rise above th temperature range shown.
5. Temperature falling maens temperature to remain in or fall below the temperature range shown.

TOWN OF CALEDON
PLANNING
RECEIVED
Jul 12, 2021

	TEMPERATURE RANGE (Celcius)	TYPE OF PRECIPITATION	ROAD SURFACE CONDITION	ACTIVITY	RECOMMENDED TREATMENTS FOR LEVEL II - SNOW PACKED ROADWAY LEVEL OF SERVICE		
					BEGINNING OF STORM	DURING STORM (1)	AFTER STORM (2)
1	Any Temperature	Dry or Wet Snow	Snow Packed	Plowing	**YES:** CONTINUOUS (Maintain Snow Packed Condition)		**YES:** Wing Back Shoulder Areas; Scarify Slippery Sections; Cleanup
				Sanding	**NO**	**ONLY IF REQUIRED:** On Hills, Curves, Hazardous Locations, and Slippery Sections	
				Salting	**NO**	**NO**	**NO:** on Gravel Surface: **YES:** on Paved Surface If Temperature -12° C. and Rising
2	Any Temperature	Sleet or Freezing Rain	Possible Icing	Plowing	**NO**	**NO**	**YES:** Scarify Slippery Sections
				Sanding	**NO**	**YES:** SLIPPERY SECTIONS ONLY	
				Salting	**NO**	**NO**	**NO:** on Gravel Surface; **YES:** on Paved Surface If Temperature -12° C. and Rising
3	Any Temperature After Storm	No Precipitation	Drifting	Plowing			**YES:** Cleanup (Maintain Snow Packed Condition)
				Sanding			**YES:** SLIPPERY SECTIONS ONLY
				Salting			**NO**

NOTES: 1. Recommended treatment for various conditions shown on this chart should be used IN MOST CASES however, unusual circumstances may necessitate departure from the recommended treatment.

2. During storm conditions, plowing should be undertaken to ensure that the snow accumulation on the road surface DOES NOT EXCEED 8.0 cm. for Priority II Level of Service.

3. Winging back of the roadway shoulder areas should usually be done only ONCE after the storm.

TOWN OF CALEDON
PLANNING
RECEIVED

Jul 12, 2021

APPENDIX L

Pumping Test Data

TOWN OF CALEDON
PLANNING
RECEIVED
Jul 12, 2021

Belfountain
6 Hour Pupmping Test Results TW1 - Test Well
TW1 (fully penetrating)

Well depth (mbgs)	53.94
Open hole interval (mbgs)	30.78 to 53.94
standing water level (mbTOC)	19.19
stick up (m above gs)	1.1
Datalogger at (mbTOC)	28.2
Pumping Rate L/sec	0.75
Pumping Rate L/min	45

TW1 Pumping

Elapsed Time Manual (min)	Water Level Manual (mbTOC)	Drawdown manual (m)
0.1	19.02	-0.17
1	23.3	4.11
2	26.27	7.08
4	30.12	10.93
5	31.7	12.51
6	32.59	13.4
7	33.23	14.04
8	33.54	14.35
9	33.66	14.47
10	33.72	14.53
12	33.86	14.67
15	34.06	14.87
17	34.07	14.88
18	34.08	14.89
20	34.1	14.91
25	34.05	14.86
30	34.26	15.07
35	34.22	15.03
40	34.16	14.97
45	34.19	15
50	34.25	15.06
55	34.23	15.04
60	34.24	15.05
70	34.26	15.07
80	34.27	15.08
90	34.22	15.03
100	34.28	15.09
120	34.26	15.07
135	34.27	15.08
150	34.31	15.12
165	34.4	15.21
180	34.29	15.1
195	34.23	15.04
210	34.52	15.33
225	34.43	15.24
240	34.41	15.22
255	34.39	15.2
270	34.52	15.33
285	34.54	15.35
300	34.55	15.36
315	34.58	15.39
330	34.58	15.39
345	34.62	15.43
360	34.59	15.4

TW1 Recovery

Elapsed Time Manual (min)	Water Level Manual (mbTOC)	Drawdown manual (m)
0.1	34.58	0
1	32.51	2.07
2	30.57	4.01
3	28.93	5.65
4	27.51	7.07
5	26.29	8.29
6	25.28	9.3
7	24.39	10.19
8	23.65	10.93
9	23.03	11.55
10	22.53	12.05
12	21.76	12.82
14	21.27	13.31
15	21.08	13.5
16	20.92	13.66
18	20.72	13.86
20	20.56	14.02
25	20.33	14.25
30	20.19	14.39
40	20.13	14.45
45	20.11	14.47
50	20.02	14.56
55	19.96	14.62
60	19.92	14.66

TOWN OF CALEDON
PLANNING
RECEIVED
Jul 12, 2021

Belfountain
6 Hour Pupmping Test Results TW2 - Test Well

TW2 (partially penetrating)

Well depth (mbgs)	20.11
Open hole interval (mbgs)	12.49 to 20.11
standing water level (mbTOC)	14.07
stick up (m above gs)	0.88
Datalogger at (mbTOC)	20
Pumping Rate L/sec	0.189
Pumping Rate L/min	11.34

TW2 Pumping

Elapsed Time Manual (min)	Water Level Manual (mbTOC)	Drawdown manual (m)
0.1	14.07	0.01
1	14.1	0.04
2	14.11	0.05
3	14.11	0.05
4	14.11	0.05
5	14.11	0.05
6	14.11	0.05
7	14.11	0.05
8	14.11	0.05
9	14.12	0.06
10	14.12	0.06
12	14.12	0.06
14	14.12	0.06
15	14.12	0.06
16	14.12	0.06
18	14.12	0.06
20	14.12	0.06
25	14.13	0.07
30	14.13	0.07
35	14.13	0.07
40	14.13	0.07
45	14.13	0.07
50	14.13	0.07
55	14.135	0.075
60	14.14	0.08
75	14.14	0.08
90	14.15	0.09
105	14.15	0.09
120	14.15	0.09
135	14.15	0.09
150	14.15	0.09
165	14.15	0.09
180	14.16	0.1
195	14.16	0.1
210	14.16	0.1
225	14.16	0.1
240	14.16	0.1
255	14.16	0.1
270	14.16	0.1
285	14.16	0.1
300	14.16	0.1
315	14.16	0.1
330	14.16	0.1
345	14.16	0.1
360	14.16	0.1

TW2 Recovery

Elapsed Time Manual (min)	Water Level Manual (mbTOC)	Drawdown manual (m)
0.1	14.16	0
1	14.13	0.03
2	14.12	0.04
3	14.12	0.04
4	14.12	0.04
5	14.12	0.04
6	14.12	0.04
7	14.12	0.04
8	14.12	0.04
9	14.11	0.05
10	14.11	0.05
12	14.11	0.05
15	14.11	0.05
20	14.11	0.05
25	14.1	0.06
30	14.1	0.06
40	14.1	0.06
50	14.09	0.07
60	14.09	0.07

Belfountain
6 Hour Pupmping Test Results TW3 - Test Well

TW3 (fully penetrating)

Well depth (mbgs)	35.96
Open hole interval (mbgs)	22.8 to 35.96
standing water level (mbTOC)	15.8
stick up (m above gs)	0.79
Datalogger at (mbTOC)	21.62
Pumping Rate L/sec	1.61
Pumping Rate L/min	96.6

TW3 Pumping

Elapsed Time Manual (min)	Water Level Manual (mbTOC)	Drawdown manual (m)
0.1	15.8	0
1	19.01	3.21
2	20.77	4.97
3	21.42	5.62
4	21.84	6.04
5	22.22	6.42
6	22.3	6.5
7	22.3	6.5
8	22.6	6.8
9	22.6	6.8
10	22.76	6.96
12	23.02	7.22
15	23.08	7.28
16	23.12	7.32
18	23.18	7.38
20	23.22	7.42
25	23.32	7.52
30	23.38	7.58
35	23.41	7.61
40	23.46	7.66
45	23.5	7.7
50	23.52	7.72
55	23.53	7.73
60	23.55	7.75
70	23.59	7.79
80	23.62	7.82
90	23.64	7.84
100	23.65	7.85
110	23.65	7.85
120	23.64	7.84
135	23.65	7.85
150	23.66	7.86
165	23.63	7.83
186	23.63	7.83
195	23.63	7.83
210	23.63	7.83
225	23.64	7.84
240	23.64	7.84
255	23.65	7.85
270	23.64	7.84
285	23.64	7.84
300	23.64	7.84
315	23.65	7.85
330	23.64	7.84
345	23.62	7.82
360	23.62	7.82

TW3 Recovery

Elapsed Time Manual (min)	Water Level Manual (mbTOC)	Drawdown manual (m)
0.1	23.62	0
1.1	20.01	3.61
2.1	18.43	5.19
3.1	17.55	6.07
4.1	17.09	6.53
5.1	16.86	6.76
6.1	16.73	6.89
7.1	16.64	6.98
8.1	16.59	7.03
9.1	16.54	7.08
10.1	16.51	7.11
11.1	16.45	7.17
12.1	16.41	7.21
13.1	16.38	7.24
14.1	16.36	7.26
15.1	16.32	7.3
16.1	16.28	7.34
17.1	16.22	7.4
18.1	16.16	7.46
19.1	16.11	7.51
20.1	16.07	7.55
21.1	16.02	7.6
22.1	16.01	7.61
23.1	15.99	7.63

TOWN OF CALEDON
PLANNING
RECEIVED
Jul 12, 2021

Belfountain
6 Hour Pupmping Test Results TW4 - Test Well

TW4 (fully penetrating)

Well depth (mbgs)	35.66
Open hole interval (mbgs)	17.67 to 35.66
standing water level (mbTOC)	19.56
stick up (m above gs)	0.94
Datalogger at (mbTOC)	27.72
Pumping Rate L/sec	0.5
Pumping Rate L/min	30

Belfountain
6 Hour Pupmping Test Results TW5 - Test Well

TW5 (fully penetrating)

Well depth (mbgs)	32.3
Open hole interval (mbgs)	13.41 to 32.30
standing water level (mbTOC)	15.34
stick up (m above gs)	0.83
Datalogger at (mbTOC)	30
Pumping Rate L/sec	1.26
Pumping Rate L/min	75.6

TW4 Pumping

Elapsed Time Manual (min)	Water Level Manual (mbTOC)	Drawdown manual (m)
0.1	19.56	0
1	19.68	0.12
2	19.69	0.13
3	19.69	0.13
4	19.69	0.13
5	19.69	0.13
6	19.69	0.13
7	19.69	0.13
8	19.69	0.13
9	19.69	0.13
10	19.69	0.13
12	19.69	0.13
15	19.69	0.13
16	19.69	0.13
18	19.69	0.13
20	19.69	0.13
25	19.69	0.13
30	19.69	0.13
35	19.69	0.13
40	19.695	0.135
45	19.695	0.135
50	19.695	0.135
55	19.7	0.14
60	19.7	0.14
70	19.7	0.14
80	19.7	0.14
90	19.705	0.145
100	19.705	0.145
110	19.705	0.145
120	19.705	0.145
135	19.705	0.145
150	19.705	0.145
165	19.705	0.145
186	19.705	0.145
195	19.705	0.145
210	19.705	0.145
225	19.705	0.145
240	19.705	0.145
255	19.705	0.145
270	19.705	0.145
285	19.705	0.145
300	19.705	0.145
315	19.71	0.15
330	19.71	0.15
345	19.71	0.15
360	19.71	0.15

TW4 Recovery

Elapsed Time Manual (min)	Water Level Manual (mbTOC)	Drawdown manual (m)
0.1	19.71	0
1	19.51	
2	19.58	0.13
3	19.58	0.13
4	19.58	0.13
5	19.575	0.135
6	19.575	0.135
7	19.575	0.135
8	19.575	0.135
9	19.575	0.135
10	19.575	0.135
12	19.575	0.135
14	19.575	0.135
15	19.575	0.135
16	19.575	0.135
18	19.575	0.135
20	19.575	0.135
25	19.575	0.135
30	19.575	0.135
35	19.575	0.135
40	19.575	0.135
45	19.575	0.135
50	19.57	0.14
55	19.57	0.14
60	19.57	0.14

TW5 Pumping

Elapsed Time Manual (min)	Water Level Manual (mbTOC)	Drawdown manual (m)
0.1	15.34	0
1	16.97	1.63
2	18.23	2.89
3	20.34	5
4	22.89	7.55
5	23.09	7.75
6	21.98	6.64
7	21.95	6.61
8	21.95	6.61
9	21.97	6.63
10	22	6.66
12	22.13	6.79
14	22.19	6.85
16	22.24	6.9
18	22.3	6.96
20	22.38	7.04
25	22.56	7.22
30	22.65	7.31
35	22.74	7.4
40	22.81	7.47
45	22.9	7.56
50	22.99	7.65
55	23.02	7.68
60	23.06	7.72
70	23.16	7.82
80	23.28	7.94
90	23.31	7.97
100	23.37	8.03
115	23.52	8.18
130	23.64	8.3
145	23.8	8.46
160	23.85	8.51
175	24.13	8.79
190	24.4	9.06
205	24.56	9.22
220	24.67	9.33
235	24.84	9.5
250	25.04	9.7
265	25.79	10.45
280	25.96	10.62
295	26.21	10.87
310	26.49	11.15
322	27.12	11.78

TW5 Recovery

Elapsed Time Manual (min)	Water Level Manual (mbTOC)	Drawdown manual (m)
0.1	22.48	0
1	22.01	0.47
2	21.33	1.15
3	19.76	2.72
4	18.47	4.01
5	18.13	4.35
6	17.8	4.68
7	17.52	4.96
8	17.36	5.12
9	17.24	5.24
13	17.14	5.34
15	16.96	5.52
20	16.89	5.59
25	16.81	5.67
35	16.76	5.72
45	16.7	5.78
60	16.66	5.82

TOWN OF CALEDON
PLANNING
RECEIVED
Jul 12, 2021

Belfountain
6 Hour Pupmping Test Results TW6 - Test Well
TW6 (fully penetrating)

Well depth (mbgs)	32.39
Open hole interval (mbgs)	13.41 to 32.30
standing water level (mbTOC)	14.69
stick up (m above gs)	0.79
Datalogger at (mbTOC)	30
Pumping Rate L/sec	1.14
Pumping Rate L/min	68.4

TW6 Pumping

Elapsed Time Manual (min)	Water Level Manual (mbTOC)	Drawdown manual (m)
0.1	14.69	0
2	18.21	3.52
3	18.49	3.8
5	19.8	5.11
6	19.86	5.17
7	19.96	5.27
8	19.94	5.25
9	19.93	5.24
10	20.36	5.67
12	20.02	5.33
14	19.83	5.14
15	19.76	5.07
16	19.72	5.03
18	19.69	5
23	19.68	4.99
25	19.68	4.99
30	19.7	5.01
35	19.73	5.04
40	19.75	5.06
45	19.78	5.09
50	19.84	5.15
55	19.81	5.12
60	19.83	5.14
70	19.87	5.18
80	19.9	5.21
90	19.93	5.24
100	19.96	5.27
110	19.98	5.29
120	20.01	5.32
135	20.03	5.34
150	20.06	5.37
165	20.09	5.4
180	20.12	5.43
195	20.15	5.46
210	20.18	5.49
225	20.22	5.53
240	20.24	5.55
255	20.27	5.58
270	20.29	5.6
285	20.32	5.63
300	20.34	5.65
315	20.35	5.66
330	20.36	5.67
345	20.38	5.69
360	20.41	5.72

TW6 Recovery

Elapsed Time Manual (min)	Water Level Manual (mbTOC)	Drawdown manual (m)
0.1	20.41	0
1	18.49	1.92
2	17.19	3.22
3	16.38	4.03
4	16.01	4.4
5	15.82	4.59
6	15.74	4.67
7	15.7	4.71
9	15.66	4.75
10	15.65	4.76
12.5	15.62	4.79
15	15.6	4.81
22	15.55	4.86
25	15.55	4.86
30	15.53	4.88
35	15.51	4.9
40	15.5	4.91
45	15.47	4.94
50	15.46	4.95
55	15.44	4.97
60	15.42	4.99

TOWN OF CALEDON
PLANNING
RECEIVED

Jul 12, 2021

APPENDIX M

Long-Term Safe-Yield Analysis

TOWN OF CALEDON
PLANNING
RECEIVED
Jul 12, 2021

Long-term Drawdown Calculations (20 and 50 years)

Table 1 - Based on Peak Pumping Rates (27,000 L/day)

Well ID	Estimated Transmissivity (m^2/day)	Pumping rate (m^3/day)	Radius from pumping well (m)	Storage	20 years			50 years			Static Water Level (mbgs)	Available Drawdown (m)	Calculated Drawdown (m)	
					Time (days) 20 years	u	W(u)	Time (days) 50 years	u	W(u)			20 years	50 years
TW1	9.37	27	0.075	5	7300	1.0E-07	15.5409	18250	4.1E-08	16.4825	19.19	23.17	3.56	3.78
TW2	14.94	27	0.075	5	7300	6.4E-08	15.9872	18250	2.6E-08	16.888	14.07	2.23	2.30	2.43
TW3	84.85	27	0.075	5	7300	1.1E-08	17.7482	18250	4.5E-09	18.642	15.8	13.58	0.45	0.47
TW4	403.19	27	0.075	5	7300	2.4E-09	19.2706	18250	9.6E-10	20.1869	19.56	7.105	0.10	0.11
TW5	26.60	27	0.075	5	7300	3.6E-08	16.5625	18250	1.4E-08	17.507	15.34	7.515	1.34	1.41
TW6	72.10	27	0.075	5	7300	1.3E-08	17.5811	18250	5.3E-09	18.4783	14.69	8.165	0.52	0.55

Table 2 - Based on Average Pumping Rates (2,250 L/day)

Well ID	Estimated Transmissivity (m^2/day)	Pumping rate (m^3/day)	Radius from pumping well (m)	Storage	20 years			50 years			Static Water Level (mbgs)	Available Drawdown (m)	Calculated Drawdown (m)	
					Time (days) 20 years	u	W(u)	Time (days) 50 years	u	W(u)			20 years	50 years
TW1	9.37	2.25	0.075	5	7300	1.0E-07	15.5409	18250	4.1E-08	16.4825	19.19	23.17	0.30	0.31
TW2	14.94	2.25	0.075	5	7300	6.4E-08	15.9872	18250	2.6E-08	16.888	14.07	2.23	0.19	0.20
TW3	84.85	2.25	0.075	5	7300	1.1E-08	17.7482	18250	4.5E-09	18.642	15.8	13.58	0.04	0.04
TW4	403.19	2.25	0.075	5	7300	2.4E-09	19.2706	18250	9.6E-10	20.1869	19.56	7.105	0.01	0.01
TW5	26.60	2.25	0.075	5	7300	3.6E-08	16.5625	18250	1.4E-08	17.507	15.34	7.515	0.11	0.12
TW6	72.10	2.25	0.075	5	7300	1.3E-08	17.5811	18250	5.3E-09	18.4783	14.69	8.165	0.04	0.05

Notes:
Where available drawdown is considered to be the distance between the static water level and the centre of the well screer

TOWN OF CALEDON
PLANNING
RECEIVED

Jul 12, 2021

Safe Yield Calculator - TW1

Farvolden Method

Equation B.1:

$$Q_{20} = \frac{4\pi T(H_A/8)}{2.30} S_f = 0.683 T H_A S_f$$

Definitions:

Q_{20} = 20 year safe pumping rate for the well (m^3/day)
T = Transmissivity (m^2/day)
S_f = Safety factor = 0.7 (no units)
H_A = Available head (m)
Q = Pumping rate used during the pumping test (m^3/day)
S_{100min} = Drawdown observed in well during the pumping test at 100 minutes (m)
$(S_{20yrs} - S_{100min})_{theor}$ = The theoretical drawdown in the well after 20 years of pumping minus the theoretical drawdown in the well at 100 minutes, based on the most appropriate theoretical equation for the aquifer, e.g., Theis, Hantush, etc. (m)

Input data:

T (m^2/day) =	9.4
H_A (m) =	32.21

Results:

Q_{20} (m^3/day) =	144.76
Q_{20} (L/min) =	100.53

Notes:

a. This workbook calculates a 20-year safe pumping rate for a well using the method described in: Farvolden, R.N. 1959. Groundwater supply in Alberta. Alberta Research Council. Unpublished report.

b. Values in the colour shaded cells can be updated by the user; all other cells are protected.

van der Kamp and Maathuis Method

Equation B.2:

$$Q_{20} = \frac{S_f * H_A * Q}{s_{100\,\mathrm{min}} + \left(s_{20\,yrs} - s_{100\,\mathrm{min}}\right)_{theo}}$$

Definitions:

Q_{20} = 20 year safe pumping rate for the well (m^3/day)
T = Transmissivity (m^2/day)
S_f = Safety factor = 0.7 (no units)
H_A = Available head (m)
Q = Pumping rate used during the pumping test (m^3/day)
S_{100min} = Drawdown observed in well during the pumping test at 100 minutes (m)
$(S_{20yrs} - S_{100min})_{theor}$ = The theoretical drawdown in the well after 20 years of pumping minus the theoretical drawdown in the well at 100 minutes, based on the most appropriate theoretical equation for the aquifer, e.g., Theis, Hantush, etc. (m)

Input data:

Q (m^3/day) =	64.8	S_{100}min (m) =	8.95
H_A (m) =	32.21	$(S_{20yrs} - S_{100min})_{theor}$ (m) =	2.66

Results:

Q_{20} (m^3/day) =	125.84
Q_{20} (L/min) =	87.39

Notes:

a. This workbook calculates a 20-year safe pumping rate for a well using the method described in: van der Kamp, G. and H. Maathuis. 2005. The applicability of Q20 methods for determining sustainable groundwater yields. In Proceedings of the 58th Canadian Geotechnical and 7th Joint IAH-CNC and CGS Groundwater Specialty Conference. Saskatoon, SK, Canada.

b. Values in the colour shaded cells can be updated by the user; all other cells are protected.

TOWN OF CALEDON
PLANNING
RECEIVED

Jul 12, 2021

Safe Yield Calculator - TW2

Farvolden Method

Equation B.1:

$$Q_{20} = \frac{4\pi T(H_A/8)}{2.30} S_f = 0.683 T H_A S_f$$

Definitions:

Q_{20} = 20 year safe pumping rate for the well (m^3/day)
T = Transmissivity (m^2/day)
S_f = Safety factor = 0.7 (no units)
H_A = Available head (m)
Q = Pumping rate used during the pumping test (m^3/day)
S_{100min} = Drawdown observed in well during the pumping test at 100 minutes (m)
$(S_{20yrs} - S_{100min})_{theor}$ = The theoretical drawdown in the well after 20 years of pumping minus the theoretical drawdown in the well at 100 minutes, based on the most appropriate theoretical equation for the aquifer, e.g., Theis, Hantush, etc. (m)

Input data:

T (m^2/day) =	14.9
H_A (m) =	5.55

Results:

Q_{20} (m^3/day) =	39.54
Q_{20} (L/min) =	27.46

Notes:

a. This workbook calculates a 20-year safe pumping rate for a well using the method described in: Farvolden, R.N. 1959. Groundwater supply in Alberta. Alberta Research Council. Unpublished report.

b. Values in the colour shaded cells can be updated by the user; all other cells are protected.

van der Kamp and Maathuis Method

Equation B.2:

$$Q_{20} = \frac{S_f * H_A * Q}{s_{100\,\mathrm{min}} + \left(s_{20\,yrs} - s_{100\,\mathrm{min}}\right)_{theo}}$$

Definitions:

Q_{20} = 20 year safe pumping rate for the well (m^3/day)
T = Transmissivity (m^2/day)
S_f = Safety factor = 0.7 (no units)
H_A = Available head (m)
Q = Pumping rate used during the pumping test (m^3/day)
S_{100min} = Drawdown observed in well during the pumping test at 100 minutes (m)
$(S_{20yrs} - S_{100min})_{theor}$ = The theoretical drawdown in the well after 20 years of pumping minus the theoretical drawdown in the well at 100 minutes, based on the most appropriate theoretical equation for the aquifer, e.g., Theis, Hantush, etc. (m)

Input data:

Q (m^3/day) =	16.3296	S_{100}min (m) =	0.06
H_A (m) =	5.55	$(S_{20yrs} - S_{100min})_{theor}$ (m) =	1.66

Results:

Q_{20} (m^3/day) =	36.88
Q_{20} (L/min) =	25.61

Notes:

a. This workbook calculates a 20-year safe pumping rate for a well using the method described in: van der Kamp, G. and H. Maathuis. 2005. The applicability of Q20 methods for determining sustainable groundwater yields. In Proceedings of the 58th Canadian Geotechnical and 7th Joint IAH-CNC and CGS Groundwater Specialty Conference. Saskatoon, SK, Canada.

b. Values in the colour shaded cells can be updated by the user; all other cells are protected.

TOWN OF CALEDON
PLANNING
RECEIVED

Jul 12, 2021

Safe Yield Calculator - TW3

Farvolden Method

Equation B.1:

$$Q_{20} = \frac{4\pi T(H_A/8)}{2.30} S_f = 0.683 T H_A S_f$$

Definitions:

Q_{20} = 20 year safe pumping rate for the well (m^3/day)
T = Transmissivity (m^2/day)
S_f = Safety factor = 0.7 (no units)
H_A = Available head (m)
Q = Pumping rate used during the pumping test (m^3/day)
S_{100min} = Drawdown observed in well during the pumping test at 100 minutes (m)
$(S_{20yrs} - S_{100min})_{theor}$ = The theoretical drawdown in the well after 20 years of pumping minus the theoretical drawdown in the well at 100 minutes, based on the most appropriate theoretical equation for the aquifer, e.g., Theis, Hantush, etc. (m)

Input data:

T (m^2/day) =	84.9
H_A (m) =	17.72

Results:

Q_{20} (m^3/day) =	719.27
Q_{20} (L/min) =	499.49

Notes:

a. This workbook calculates a 20-year safe pumping rate for a well using the method described in: Farvolden, R.N. 1959. Groundwater supply in Alberta. Alberta Research Council. Unpublished report.

b. Values in the colour shaded cells can be updated by the user; all other cells are protected.

van der Kamp and Maathuis Method

Equation B.2:

$$Q_{20} = \frac{S_f * H_A * Q}{s_{100\,\mathrm{min}} + \left(s_{20\,yrs} - s_{100\,\mathrm{min}}\right)_{theo}}$$

Definitions:

Q_{20} = 20 year safe pumping rate for the well (m^3/day)
T = Transmissivity (m^2/day)
S_f = Safety factor = 0.7 (no units)
H_A = Available head (m)
Q = Pumping rate used during the pumping test (m^3/day)
S_{100min} = Drawdown observed in well during the pumping test at 100 minutes (m)
$(S_{20yrs} - S_{100min})_{theor}$ = The theoretical drawdown in the well after 20 years of pumping minus the theoretical drawdown in the well at 100 minutes, based on the most appropriate theoretical equation for the aquifer, e.g., Theis, Hantush, etc. (m)

Input data:

Q (m^3/day) =	139.1	S_{100}min (m) =	5.48
H_A (m) =	17.72	$(S_{20yrs} - S_{100min})_{theor}$ (m) =	0.29

Results:

Q_{20} (m^3/day) =	299.03
Q_{20} (L/min) =	207.66

Notes:

a. This workbook calculates a 20-year safe pumping rate for a well using the method described in: van der Kamp, G. and H. Maathuis. 2005. The applicability of Q20 methods for determining sustainable groundwater yields. In Proceedings of the 58th Canadian Geotechnical and 7th Joint IAH-CNC and CGS Groundwater Specialty Conference. Saskatoon, SK, Canada.

b. Values in the colour shaded cells can be updated by the user; all other cells are protected.

TOWN OF CALEDON
PLANNING
RECEIVED

Jul 12, 2021

Safe Yield Calculator - TW4

Farvolden Method

Equation B.1:

$$Q_{20} = \frac{4\pi T(H_A/8)}{2.30} S_f = 0.683 T H_A S_f$$

Definitions:

Q_{20} = 20 year safe pumping rate for the well (m^3/day)
T = Transmissivity (m^2/day)
S_f = Safety factor = 0.7 (no units)
H_A = Available head (m)
Q = Pumping rate used during the pumping test (m^3/day)
S_{100min} = Drawdown observed in well during the pumping test at 100 minutes (m)
$(S_{20yrs} - S_{100min})_{theor}$ = The theoretical drawdown in the well after 20 years of pumping minus the theoretical drawdown in the well at 100 minutes, based on the most appropriate theoretical equation for the aquifer, e.g., Theis, Hantush, etc. (m)

Input data:

T (m^2/day) =	403
H_A (m) =	14.11

Results:

Q_{20} (m^3/day) =	2718.63
Q_{20} (L/min) =	1887.94

Notes:

a. This workbook calculates a 20-year safe pumping rate for a well using the method described in: Farvolden, R.N. 1959. Groundwater supply in Alberta. Alberta Research Council. Unpublished report.

b. Values in the colour shaded cells can be updated by the user; all other cells are protected.

van der Kamp and Maathuis Method

Equation B.2:

$$Q_{20} = \frac{S_f * H_A * Q}{s_{100\,\mathrm{min}} + \left(s_{20\,yrs} - s_{100\,\mathrm{min}}\right)_{theo}}$$

Definitions:

Q_{20} = 20 year safe pumping rate for the well (m^3/day)
T = Transmissivity (m^2/day)
S_f = Safety factor = 0.7 (no units)
H_A = Available head (m)
Q = Pumping rate used during the pumping test (m^3/day)
S_{100min} = Drawdown observed in well during the pumping test at 100 minutes (m)
$(S_{20yrs} - S_{100min})_{theor}$ = The theoretical drawdown in the well after 20 years of pumping minus the theoretical drawdown in the well at 100 minutes, based on the most appropriate theoretical equation for the aquifer, e.g., Theis, Hantush, etc. (m)

Input data:

Q (m^3/day) =	43.2	S_{100}min (m) =	0.15
H_A (m) =	14.11	$(S_{20yrs} - S_{100min})_{theor}$ (m) =	0.06

Results:

Q_{20} (m^3/day) =	2031.84
Q_{20} (L/min) =	1411.00

Notes:

a. This workbook calculates a 20-year safe pumping rate for a well using the method described in: van der Kamp, G. and H. Maathuis. 2005. The applicability of Q20 methods for determining sustainable groundwater yields. In Proceedings of the 58th Canadian Geotechnical and 7th Joint IAH-CNC and CGS Groundwater Specialty Conference. Saskatoon, SK, Canada.

b. Values in the colour shaded cells can be updated by the user; all other cells are protected.

TOWN OF CALEDON
PLANNING
RECEIVED

Jul 12, 2021

Safe Yield Calculator - TW5

Farvolden Method

Equation B.1:

$$Q_{20} = \frac{4\pi T(H_A/8)}{2.30} S_f = 0.683 T H_A S_f$$

Definitions:

Q_{20} = 20 year safe pumping rate for the well (m^3/day)
T = Transmissivity (m^2/day)
S_f = Safety factor = 0.7 (no units)
H_A = Available head (m)
Q = Pumping rate used during the pumping test (m^3/day)
S_{100min} = Drawdown observed in well during the pumping test at 100 minutes (m)
$(S_{20yrs} - S_{100min})_{theor}$ = The theoretical drawdown in the well after 20 years of pumping minus the theoretical drawdown in the well at 100 minutes, based on the most appropriate theoretical equation for the aquifer, e.g., Theis, Hantush, etc. (m)

Input data:

T (m^2/day) =	26.6
H_A (m) =	12.94

Results:

Q_{20} (m^3/day) =	164.56
Q_{20} (L/min) =	114.28

Notes:

a. This workbook calculates a 20-year safe pumping rate for a well using the method described in: Farvolden, R.N. 1959. Groundwater supply in Alberta. Alberta Research Council. Unpublished report.

b. Values in the colour shaded cells can be updated by the user; all other cells are protected.

van der Kamp and Maathuis Method

Equation B.2:

$$Q_{20} = \frac{S_f * H_A * Q}{s_{100\,\mathrm{min}} + \left(s_{20\,yrs} - s_{100\,\mathrm{min}}\right)_{theo}}$$

Definitions:

Q_{20} = 20 year safe pumping rate for the well (m^3/day)
T = Transmissivity (m^2/day)
S_f = Safety factor = 0.7 (no units)
H_A = Available head (m)
Q = Pumping rate used during the pumping test (m^3/day)
S_{100min} = Drawdown observed in well during the pumping test at 100 minutes (m)
$(S_{20yrs} - S_{100min})_{theor}$ = The theoretical drawdown in the well after 20 years of pumping minus the theoretical drawdown in the well at 100 minutes, based on the most appropriate theoretical equation for the aquifer, e.g., Theis, Hantush, etc. (m)

Input data:

Q (m^3/day) =	108.864	S_{100}min (m) =	7.15
H_A (m) =	12.94	$(S_{20yrs} - S_{100min})_{theor}$ (m) =	0.94

Results:

Q_{20} (m^3/day) =	121.89
Q_{20} (L/min) =	84.65

Notes:

a. This workbook calculates a 20-year safe pumping rate for a well using the method described in: van der Kamp, G. and H. Maathuis. 2005. The applicability of Q20 methods for determining sustainable groundwater yields. In Proceedings of the 58th Canadian Geotechnical and 7th Joint IAH-CNC and CGS Groundwater Specialty Conference. Saskatoon, SK, Canada.

b. Values in the colour shaded cells can be updated by the user; all other cells are protected.

TOWN OF CALEDON
PLANNING
RECEIVED

Jul 12, 2021

Safe Yield Calculator - TW6

Farvolden Method

Equation B.1:

$$Q_{20} = \frac{4\pi T(H_A/8)}{2.30} S_f = 0.683 T H_A S_f$$

Definitions:

Q_{20} = 20 year safe pumping rate for the well (m^3/day)
T = Transmissivity (m^2/day)
S_f = Safety factor = 0.7 (no units)
H_A = Available head (m)
Q = Pumping rate used during the pumping test (m^3/day)
S_{100min} = Drawdown observed in well during the pumping test at 100 minutes (m)
$(S_{20yrs} - S_{100min})_{theor}$ = The theoretical drawdown in the well after 20 years of pumping minus the theoretical drawdown in the well at 100 minutes, based on the most appropriate theoretical equation for the aquifer, e.g., Theis, Hantush, etc. (m)

Input data:

T (m^2/day) =	72.2
H_A (m) =	14.38

Results:

Q_{20} (m^3/day) =	496.38
Q_{20} (L/min) =	344.71

Notes:

a. This workbook calculates a 20-year safe pumping rate for a well using the method described in: Farvolden, R.N. 1959. Groundwater supply in Alberta. Alberta Research Council. Unpublished report.

b. Values in the colour shaded cells can be updated by the user; all other cells are protected.

van der Kamp and Maathuis Method

Equation B.2:

$$Q_{20} = \frac{S_f * H_A * Q}{s_{100\,\mathrm{min}} + \left(s_{20\,yrs} - s_{100\,\mathrm{min}}\right)_{theo}}$$

Definitions:

Q_{20} = 20 year safe pumping rate for the well (m^3/day)
T = Transmissivity (m^2/day)
S_f = Safety factor = 0.7 (no units)
H_A = Available head (m)
Q = Pumping rate used during the pumping test (m^3/day)
S_{100min} = Drawdown observed in well during the pumping test at 100 minutes (m)
$(S_{20yrs} - S_{100min})_{theor}$ = The theoretical drawdown in the well after 20 years of pumping minus the theoretical drawdown in the well at 100 minutes, based on the most appropriate theoretical equation for the aquifer, e.g., Theis, Hantush, etc. (m)

Input data:

Q (m^3/day) =	98.496	S_{100}min (m) =	5.7
H_A (m) =	14.38	$(S_{20yrs} - S_{100min})_{theor}$ (m) =	0.34

Results:

Q_{20} (m^3/day) =	164.15
Q_{20} (L/min) =	113.99

Notes:

a. This workbook calculates a 20-year safe pumping rate for a well using the method described in: van der Kamp, G. and H. Maathuis. 2005. The applicability of Q20 methods for determining sustainable groundwater yields. In Proceedings of the 58th Canadian Geotechnical and 7th Joint IAH-CNC and CGS Groundwater Specialty Conference. Saskatoon, SK, Canada.

b. Values in the colour shaded cells can be updated by the user; all other cells are protected.

TOWN OF CALEDON
PLANNING
RECEIVED

Jul 12, 2021

APPENDIX N

Radius of Influence Analysis

TOWN OF CALEDON
PLANNING
RECEIVED
Jul 12, 2021

Radius of Influence for TW1

Observation Well = PW1

Theis (1935)

$$s = \frac{Q}{4\pi T} W(u) \quad (1)$$

and,

$$u = \frac{r^2 S}{4Tt} \quad (2)$$

Where:

s	*is drawdown (m)*
Q	*is pumping rate (m^3/d)*
T	*is transmissivity (m^2/d)*
W(u)	*is the well function*
S	*is storativity (-)*
t	*is time (d)*
r	*is the distance from the pumping well to the observation well or point of interest (m)*

The assumptions that are implicit in the mathematics used in the Theis derivation include:

a) The aquifer is uniform in character and the hydraulic conductivity is the same in all directions.

b) The aquifer is uniform in thickness and infinite in areal extent.

c) The aquifer receives no recharge from any source; all water removed from the well comes from aquifer storage.

Variables	
Peak Pumping Rate (m^3/day)	27
Average Pumping Rate (m^3/day)	2.25
Transmissivity (m^2/day)	9.37
Storage for Limestone (dimensionless)	5
Time (days)	18250
Radius from pumping well (m) - TW1	0.075
Radius from pumping well (m) - PW1	87
Ro = radius of influence where drawdown is zero	

TW1 - Peak Pumping Rate

u =	4.11E-08
W(u) =	16.4325
drawdown, s (m) =	3.77

PW1 - Peak Pumping Rate

u =	5.53E-02
W(u) =	2.3775
drawdown, s (m) =	0.54

TW1 - Average Pumping Rate

u =	4.11E-08
W(u) =	16.4325
drawdown, s (m) =	0.31

PW1 - Average Pumping Rate

u =	5.53E-02
W(u) =	2.3775
drawdown, s (m) =	0.05

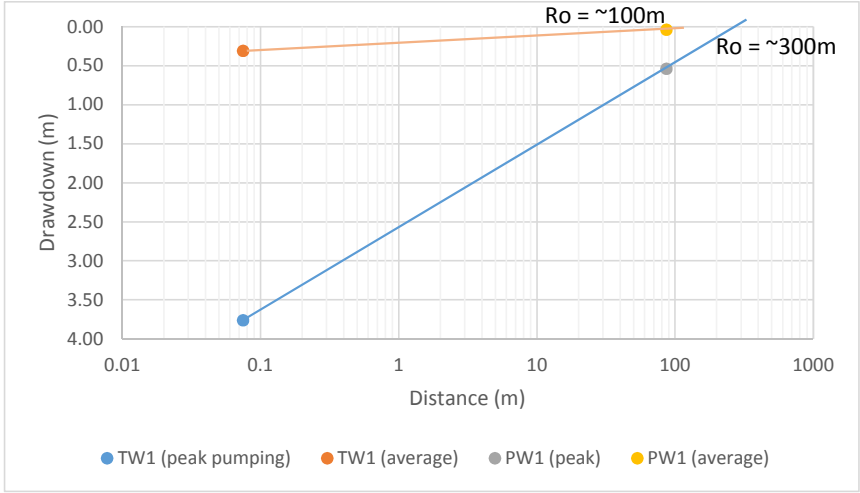

Radius of Influence

Therefore, pumping at peak pumping rate results in radius of infleunce of approximately 300 m after 50 years compared to a radius of influence of approximately 100 meters after 50 years for average pumping rate.

TOWN OF CALEDON
PLANNING
RECEIVED
Jul 12, 2021

Radius of Influence for TW1 at 15 m

Observation Well = PW1

Theis (1935)

$$s = \frac{Q}{4\pi T} W(u) \quad (1)$$

and,

$$u = \frac{r^2 S}{4Tt} \quad (2)$$

Where:

s	*is drawdown (m)*
Q	*is pumping rate (m^3/d)*
T	*is transmissivity (m^2/d)*
W(u)	*is the well function*
S	*is storativity (-)*
t	*is time (d)*
r	*is the distance from the pumping well to the observation well or point of interest (m)*

The assumptions that are implicit in the mathematics used in the Theis derivation include:

a) The aquifer is uniform in character and the hydraulic conductivity is the same in all directions.

b) The aquifer is uniform in thickness and infinite in areal extent.

c) The aquifer receives no recharge from any source; all water removed from the well comes from aquifer storage.

Variables	
Peak Pumping Rate (m^3/day)	27
Average Pumping Rate (m^3/day)	2.25
Transmissivity (m^2/day)	9.37
Storage for Limestone (dimensionless)	5
Time (days)	18250
Radius from pumping well (m) - TW1	0.075
Radius from pumping well (m)	15
Ro = radius of influence where drawdown is zero	

TW1 - Peak Pumping Rate

u =	4.11E-08
W(u) =	16.4325
drawdown, s (m) =	3.77

PW1 - Peak Pumping Rate

u =	1.64E-03
W(u) =	5.8621
drawdown, s (m) =	1.34

TW1 - Average Pumping Rate

u =	4.11E-08
W(u) =	16.4325
drawdown, s (m) =	0.31

PW1 - Average Pumping Rate

u =	1.64E-03
W(u) =	5.8621
drawdown, s (m) =	0.11

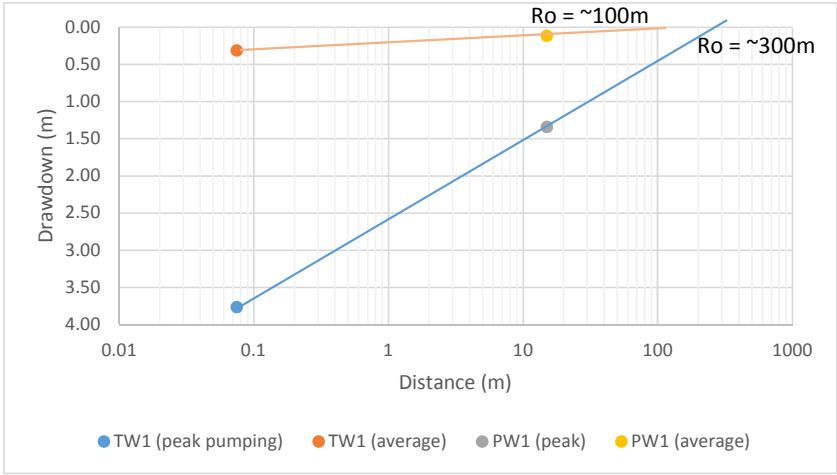

Radius of Influence

Therefore, pumping at peak pumping rate results in radius of infleunce of approximately 300 m after 50 years compared to a radius of influence of approximately 100 meters after 50 years for average pumping rate.

TOWN OF CALEDON
PLANNING
RECEIVED
Jul 12, 2021

Radius of Influence for TW4

Observation Well = immaginary at 87 m

Theis (1935)

$$s = \frac{Q}{4\pi T} W(u) \quad (1)$$

and,

$$u = \frac{r^2 S}{4Tt} \quad (2)$$

Where:

s *is drawdown (m)*
Q *is pumping rate (m^3/d)*
T *is transmissivity (m^2/d)*
W(u) *is the well function*
S *is storativity (-)*
t *is time (d)*
r *is the distance from the pumping well to the observation well or point of interest (m)*

The assumptions that are implicit in the mathematics used in the Theis derivation include:

a) The aquifer is uniform in character and the hydraulic conductivity is the same in all directions.

b) The aquifer is uniform in thickness and infinite in areal extent.

c) The aquifer receives no recharge from any source; all water removed from the well comes from aquifer storage.

Variables	
Peak Pumping Rate (m^3/day)	27
Average Pumping Rate (m^3/day)	2.25
Transmissivity (m^2/day)	403.20
Storage for Limestone (dimensionless)	5
Time (days)	18250
Radius from pumping well (m) - TW1	0.075
Radius from pumping well (m)	87
Ro = radius of influence where drawdown is zero	

TW4 - Peak Pumping Rate

u =	9.56E-10
W(u) =	20.1869
drawdown, s (m) =	0.11

Obs well - Peak Pumping Rate

u =	1.29E-03
W(u) =	6.0695
drawdown, s (m) =	0.03

TW4 - Average Pumping Rate

u =	9.56E-10
W(u) =	20.1869
drawdown, s (m) =	0.01

Obs Well - Average Pumping Rate

u =	1.29E-03
W(u) =	6.0695
drawdown, s (m) =	0.00

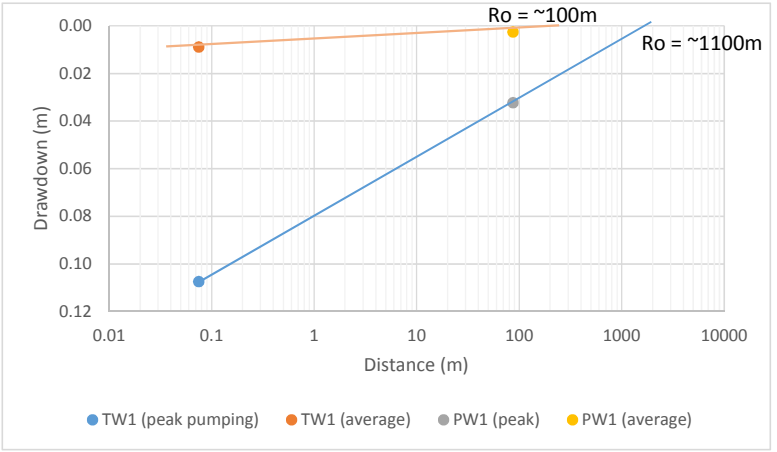

Radius of Influence

Therefore, pumping at peak pumping rate results in radius of infleunce of approximately 1100 m after 50 years compared to a radius of influence of approximately 100 meters after 50 years for average pumping rate.