TOWN OF CALEDON
PLANNING
RECEIVED
Feb.11,2021

APPENDIX 6

Appendix 6-1
Pond Design - Drainage Areas – Pond 1
Pond Design - Drainage Areas – Pond 2
Pond Design – Input Summary – Pond 1
Pond Design – Input Summary – Pond 2

Appendix 6-2
Visual OTTHYMO (VO6) Hydrologic Modelling

Appendix 6-3
Preliminary OGS Sizing

Appendix 6-4
HECRAS Summary Output Tables

APPENDIX 6-1

Pond Design

Drainage Areas – Pond 1

Drainage Areas – Pond 2

Input Summary – Pond 1

Input Summary – Pond 2

URBANTECH®

DRAINAGE AREAS

Project Name:	Macville FSR	Prepared by:	BK
Municipality:	Town of Caledon	Checked by:	
Project No.:	15-458	Submission:	1
Date:	2021-02-02		

POND 1

Contributing Drainage Area

POND 1	From	To	Area [ha]	Runoff Coefficient	Imperviousness %IMP=100 X (C-0.2)/0.7
Development Area	STM.MH10	STM.HW1	78.66	0.75	78.0
Total to STM.HW1			**78.66**	**0.75**	**78.0**
Pond Block			5.26	0.80	85.0
Total Drainage Area to POND 1			**83.92**	**0.75**	**78.4**

Urbantech® Consulting, A Division of Leighton-Zec Ltd. | 3760 14th Avenue, Suite 301 · Markham · ON · L3R 3T7 | 905.946.9461
urbantech.com

URBANTECH®

DRAINAGE AREAS

Project Name:	Macville FSR	Prepared by:	BK
Municipality:	Town of Caledon	Checked by:	
Project No.:	15-458	Submission:	1
Date:	2021-02-02		

POND 2

Contributing Drainage Area

POND 2	From	To	Area [ha]	Runoff Coefficient	Imperviousness %IMP=100 X (C-0.2)/0.7
Development Area	STM.MH109	STM.HW100	47.00	0.66	66.3
Total to STM.HW100			**47.00**	**0.66**	**66.3**
Pond Block			3.15	0.80	85.0
Total Drainage Area to POND 2			**50.15**	**0.67**	**67.5**

Urbantech® Consulting, A Division of Leighton-Zec Ltd. | 3760 14th Avenue, Suite 301 · Markham · ON · L3R 3T7 | 905.946.9461
urbantech.com

URBANTECH®

INPUT SUMMARY	
Project Name: Macville FSR	Prepared by: BK
Municipality: Town of Caledon	Checked by:
Project No.: 15-458	Submission: 1
Date: 2021-02-02	

POND 1

Design Target

Event	Volume	Discharge	Description
PERM POOL	198 m^3/ha	-	(Modified for 78% imperviousness)
EXT DET	16,602 m^3	0.064 m^3/s	(Average discharge rate for 72-hour drawdown)

Wet Pond *(REFER: MOECC Stormwater Management Planning and Design Manual 2003, Table 3.2)*

Impervious Level	Water Quality Storage Vol	Extended Detention	Permanent Pool
(%)	m^3/ha	m^3/ha	m^3/ha
35%	140	40	100
55%	190	40	150
70%	225	40	185
85%	250	40	210
Interpolated Storage Requirement			
78%	238	40	**198**

	Area [ha]	IMP%
Total Contributing Area	83.92	78%

Return Period	Stage [m]	Required Volume [m^3]	TRCA Unit Rate* [m^3/s]	Target Discharge [m^3/s]
PERM POOL	262.50	16,644		
EXT DET	263.05	16,602		0.060
2-YR		24,111	0.0063	0.530
5-YR		30,178	0.0096	0.808
10-YR		34,516	0.0119	0.997
25-YR		39,904	0.0149	1.253
50-YR		44,221	0.0173	1.455
100-YR	264.00	48,600	0.0197	1.649
REGIONAL	265.50	106,573		4.981

*Determined from TRCA SWM Criteria (2012) unit flow relationships for the 2-year to 100-year storm events within the West Humber

Drawdown Time Target = 48 to 72 Hours

Forebay L:W Ratio = 3 : 1

Urbantech® Consulting, A Division of Leighton-Zec Ltd. | 3760 14th Avenue, Suite 301 · Markham · ON · L3R 3T7 | 905.946.9461
urbantech.com

URBANTECH®

INPUT SUMMARY	
Project Name: Macville FSR	Prepared by: BK
Municipality: Town of Caledon	Checked by:
Project No.: 15-458	Submission: 1
Date: 2021-02-02	

POND 2

Design Target

Event	Volume	Discharge	Description
PERM POOL	180 m^3/ha	-	(Modified for 68% imperviousness)
EXT DET	9,176 m^3	0.035 m^3/s	(Average discharge rate for 72-hour drawdown)

Wet Pond *(REFER: MOECC Stormwater Management Planning and Design Manual 2003, Table 3.2)*

Impervious Level	Water Quality Storage Vol	Extended Detention	Permanent Pool
(%)	m^3/ha	m^3/ha	m^3/ha
35%	140	40	100
55%	190	40	150
70%	225	40	185
85%	250	40	210
Interpolated Storage Requirement			
68%	220	40	**180**

	Area [ha]	IMP%
Total Contributing Area	50.15	68%

Return Period	Stage [m]	Required Volume [m^3]	TRCA Unit Rate* [m^3/s]	Target Discharge [m^3/s]
PERM POOL	262.50	9,044		
EXT DET	263.10	9,176		0.030
2-YR		13,447	0.0067	0.336
5-YR		16,843	0.0102	0.512
10-YR		19,278	0.0126	0.631
25-YR		22,347	0.0158	0.794
50-YR		24,920	0.0184	0.924
100-YR	264.05	27,523	0.0208	1.045
REGIONAL	265.50	50,946		4.480

*Determined from TRCA SWM Criteria (2012) unit flow relationships for the 2-year to 100-year storm events within the West Humber

Drawdown Time Target = 48 to 72 Hours

Forebay L:W Ratio = 3 : 1

Urbantech® Consulting, A Division of Leighton-Zec Ltd. | 3760 14th Avenue, Suite 301 · Markham · ON · L3R 3T7 | 905.946.9461
urbantech.com

APPENDIX 6-2

Visual Otthymo (VO6) Hydrologic Modelling

Summary Output for all Existing & Proposed Scenarios

Macville Secondary Plan – Town of Caledon, Region of Peel
Visual OTTHYMO Hydrologic Model Schematic, January 2021, for 1st Submission
Scenario: 25mm to 5-Year Storm, EXISTING
(Results for 5-Year storm with 12-hour AES distribution shown in Schematic)

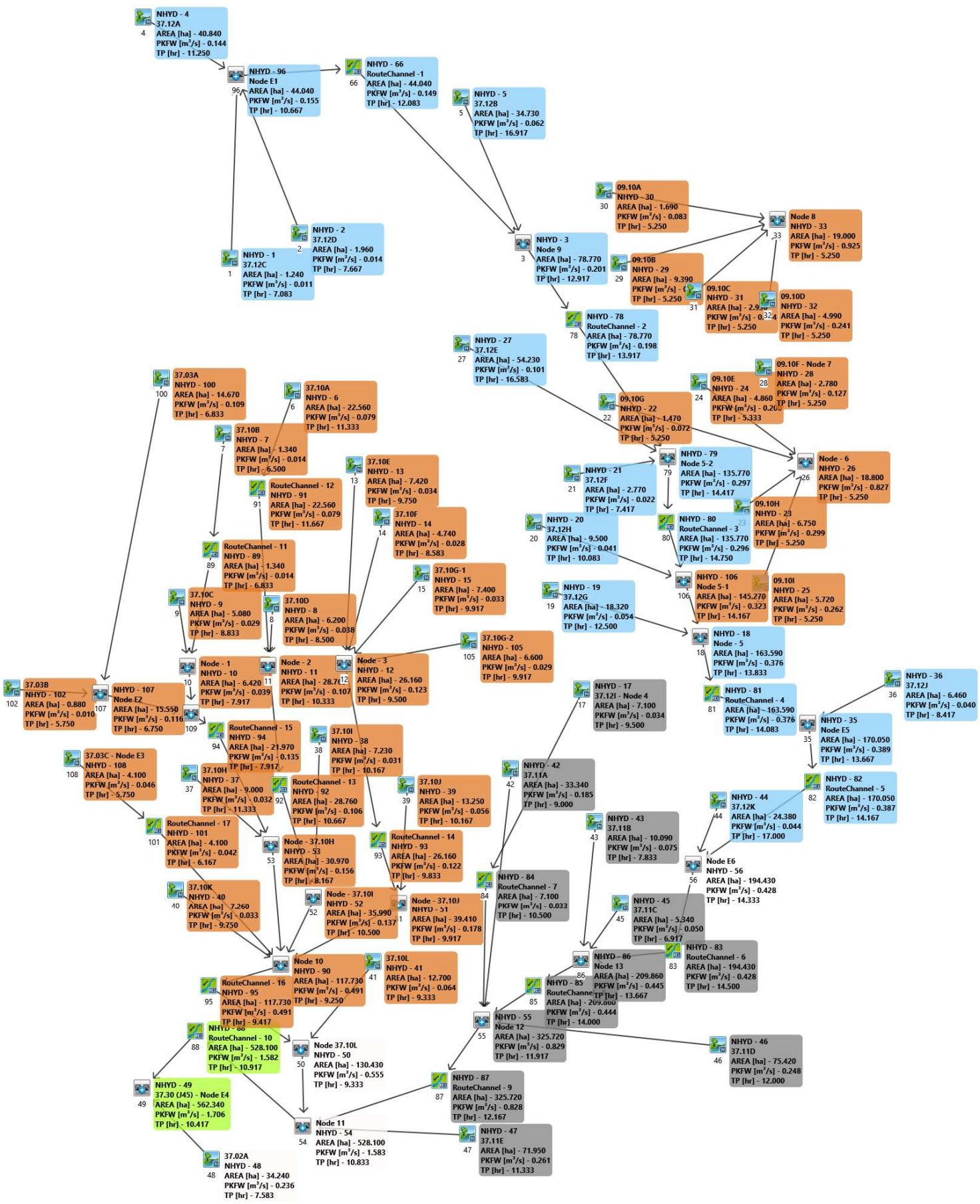

```
==========================================================================================

       V    V   I    SSSSS  U   U    A    L              (v 6.2.2001)
       V    V   I    SS     U   U   A A   L
        V  V    I     SS    U   U  AAAAA  L
        V  V    I      SS   U   U  A   A  L
         VV     I    SSSSS  UUUUU  A   A  LLLLL

        OOO   TTTTT  TTTTT  H   H  Y   Y  M   M   OOO    TM
       O   O    T      T    H   H   Y Y   MM MM  O   O
       O   O    T      T    H   H    Y    M   M  O   O
        OOO     T      T    H   H    Y    M   M   OOO
Developed and Distributed by Smart City Water Inc
Copyright 2007 - 2020 Smart City Water Inc
All rights reserved.


                  *****  S U M M A R Y   O U T P U T  *****


  Input   filename: C:\Program Files (x86)\Visual OTTHYMO 6.2\VO2\voin.dat
  Output  filename: C:\Users\pchiocchio\AppData\Local\Civica\VH5\d59fad6f-510d-48b8-a35a-1bee91f156cc\a7ef7803-6099-4105-a473-
b37a1627ec59\s
  Summary filename: C:\Users\pchiocchio\AppData\Local\Civica\VH5\d59fad6f-510d-48b8-a35a-1bee91f156cc\a7ef7803-6099-4105-a473-
b37a1627ec59\s


DATE: 02/02/2021                          TIME: 04:58:00

USER:


COMMENTS: ____________________________________________________________


  ************************************************
  ** SIMULATION : 25mm                          **
  ************************************************

  W/E COMMAND             HYD ID   DT    AREA  ' Qpeak Tpeak   R.V. R.C.   Qbase
                                   min     ha   '  cms   hrs     mm          cms

      START @  0.00 hrs
      --------------------
    READ STORM                 10.0
    [ Ptot= 25.00 mm ]
    fname : C:\Users\pchiocchio\AppData\Local\Temp\28e483ab-ebba-4caf-9e59-d34cfb3502df\97451176-a954-4555-8422-
    remark: 25MM4HRC_10min Edited 2012
*
 ** CALIB NASHYD         0022  1  5.0    1.47    0.02  1.67   5.07 0.20   0.000
    [CN=90.0         ]
    [ N = 3.0:Tp 0.10]
*
    READ STORM                 10.0
    [ Ptot= 25.00 mm ]
    fname : C:\Users\pchiocchio\AppData\Local\Temp\28e483ab-ebba-4caf-9e59-d34cfb3502df\97451176-a954-4555-8422-
    remark: 25MM4HRC_10min Edited 2012
*
 ** CALIB NASHYD         0023  1  5.0    6.75    0.05  2.00   5.20 0.21   0.000
    [CN=90.0         ]
    [ N = 3.0:Tp 0.26]
*
    READ STORM                 10.0
    [ Ptot= 25.00 mm ]
    fname : C:\Users\pchiocchio\AppData\Local\Temp\28e483ab-ebba-4caf-9e59-d34cfb3502df\97451176-a954-4555-8422-
    remark: 25MM4HRC_10min Edited 2012
*
 ** CALIB NASHYD         0024  1  5.0    4.86    0.04  2.17   5.20 0.21   0.000
    [CN=90.0         ]
    [ N = 3.0:Tp 0.34]
*
    READ STORM                 10.0
    [ Ptot= 25.00 mm ]
    fname : C:\Users\pchiocchio\AppData\Local\Temp\28e483ab-ebba-4caf-9e59-d34cfb3502df\97451176-a954-4555-8422-
    remark: 25MM4HRC_10min Edited 2012
*
 ** CALIB NASHYD         0025  1  5.0    5.72    0.05  1.92   5.20 0.21   0.000
    [CN=90.0         ]
    [ N = 3.0:Tp 0.23]
*
    ADD [  0022+  0023]  0026  3  5.0    8.22    0.06  1.92   5.18  n/a   0.000
*
    ADD [  0026+  0024]  0026  1  5.0   13.08    0.10  2.00   5.19  n/a   0.000
*
    ADD [  0026+  0025]  0026  3  5.0   18.80    0.14  2.00   5.19  n/a   0.000
*
    READ STORM                 10.0
    [ Ptot= 25.00 mm ]
    fname : C:\Users\pchiocchio\AppData\Local\Temp\28e483ab-ebba-4caf-9e59-d34cfb3502df\97451176-a954-4555-8422-
    remark: 25MM4HRC_10min Edited 2012
*
 ** CALIB NASHYD         0028  1  5.0    2.78    0.02  1.92   5.20 0.21   0.000
    [CN=90.0         ]
    [ N = 3.0:Tp 0.23]
```

```
*
    READ STORM                 10.0
    [ Ptot= 25.00 mm ]
    fname : C:\Users\pchiocchio\AppData\Local\Temp\28e483ab-ebba-4caf-9e59-d34cfb3502df\97451176-a954-4555-8422-
    remark: 25MM4HRC_10min Edited 2012
*
 ** CALIB NASHYD         0029  1  5.0    9.39    0.09  1.75   5.17 0.21   0.000
    [CN=90.0         ]
    [ N = 3.0:Tp 0.15]
*
    READ STORM                 10.0
    [ Ptot= 25.00 mm ]
    fname : C:\Users\pchiocchio\AppData\Local\Temp\28e483ab-ebba-4caf-9e59-d34cfb3502df\97451176-a954-4555-8422-
    remark: 25MM4HRC_10min Edited 2012
*
 ** CALIB NASHYD         0030  1  5.0    1.69    0.02  1.67   5.07 0.20   0.000
    [CN=90.0         ]
    [ N = 3.0:Tp 0.10]
*
    READ STORM                 10.0
    [ Ptot= 25.00 mm ]
    fname : C:\Users\pchiocchio\AppData\Local\Temp\28e483ab-ebba-4caf-9e59-d34cfb3502df\97451176-a954-4555-8422-
    remark: 25MM4HRC_10min Edited 2012
*
 ** CALIB NASHYD         0031  1  5.0    2.93    0.03  1.67   5.15 0.21   0.000
    [CN=90.0         ]
    [ N = 3.0:Tp 0.13]
*
    READ STORM                 10.0
    [ Ptot= 25.00 mm ]
    fname : C:\Users\pchiocchio\AppData\Local\Temp\28e483ab-ebba-4caf-9e59-d34cfb3502df\97451176-a954-4555-8422-
    remark: 25MM4HRC_10min Edited 2012
*
 ** CALIB NASHYD         0032  1  5.0    4.99    0.05  1.75   5.18 0.21   0.000
    [CN=90.0         ]
    [ N = 3.0:Tp 0.16]
*
    ADD [  0029+  0030]  0033  3  5.0   11.08    0.10  1.75   5.16  n/a   0.000
*
    ADD [  0033+  0031]  0033  1  5.0   14.01    0.13  1.75   5.16  n/a   0.000
*
    ADD [  0033+  0032]  0033  3  5.0   19.00    0.18  1.75   5.16  n/a   0.000
*
    READ STORM                 10.0
    [ Ptot= 25.00 mm ]
    fname : C:\Users\pchiocchio\AppData\Local\Temp\28e483ab-ebba-4caf-9e59-d34cfb3502df\97451176-a954-4555-8422-
    remark: 25MM4HRC_10min Edited 2012
*
 ** CALIB NASHYD         0001  1  5.0    1.24    0.00  4.25   2.25 0.09   0.000
    [CN=75.0         ]
    [ N = 2.5:Tp 1.47]
*
    READ STORM                 10.0
    [ Ptot= 25.00 mm ]
    fname : C:\Users\pchiocchio\AppData\Local\Temp\28e483ab-ebba-4caf-9e59-d34cfb3502df\97451176-a954-4555-8422-
    remark: 25MM4HRC_10min Edited 2012
*
 ** CALIB NASHYD         0002  1  5.0    1.96    0.00  4.67   2.25 0.09   0.000
    [CN=75.0         ]
    [ N = 2.5:Tp 1.93]
*
    READ STORM                 10.0
    [ Ptot= 25.00 mm ]
    fname : C:\Users\pchiocchio\AppData\Local\Temp\28e483ab-ebba-4caf-9e59-d34cfb3502df\97451176-a954-4555-8422-
    remark: 25MM4HRC_10min Edited 2012
*
 ** CALIB NASHYD         0004  1  5.0   40.84    0.02  7.58   2.26 0.09   0.000
    [CN=75.0         ]
    [ N = 2.5:Tp 5.06]
*
    ADD [  0001+  0002]  0096  3  5.0    3.20    0.00  4.50   2.25  n/a   0.000
*
    ADD [  0096+  0004]  0096  1  5.0   44.04    0.02  6.92   2.26  n/a   0.000
*
    CHANNEL[ 2:  0096]   0066  1  5.0   44.04    0.02  8.50   2.26  n/a   0.000
*
    READ STORM                 10.0
    [ Ptot= 25.00 mm ]
    fname : C:\Users\pchiocchio\AppData\Local\Temp\28e483ab-ebba-4caf-9e59-d34cfb3502df\97451176-a954-4555-8422-
    remark: 25MM4HRC_10min Edited 2012
*
 ** CALIB NASHYD         0005  1  5.0   34.73    0.01 13.17   2.26 0.09   0.000
    [CN=75.0         ]
    [ N = 2.5:Tp10.71]
*
    ADD [  0005+  0066]  0003  3  5.0   78.77    0.03  9.17   2.26  n/a   0.000
*
    CHANNEL[ 2:  0003]   0078  1  5.0   78.77    0.03 10.42   2.26  n/a   0.000
*
    READ STORM                 10.0
    [ Ptot= 25.00 mm ]
    fname : C:\Users\pchiocchio\AppData\Local\Temp\28e483ab-ebba-4caf-9e59-d34cfb3502df\97451176-a954-4555-8422-
    remark: 25MM4HRC_10min Edited 2012
*
 ** CALIB NASHYD         0021  1  5.0    2.77    0.00  4.42   2.25 0.09   0.000
```

```
    [CN=75.0         ]
    [ N = 2.5:Tp 1.68]
*
    READ STORM                 10.0
    [ Ptot= 25.00 mm ]
    fname : C:\Users\pchiocchio\AppData\Local\Temp\28e483ab-ebba-4caf-9e59-d34cfb3502df\97451176-a954-4555-8422-
    remark: 25MM4HRC_10min Edited 2012
*
 ** CALIB NASHYD         0027  1  5.0   54.23    0.02 12.75   2.26 0.09   0.000
    [CN=75.0         ]
    [ N = 2.5:Tp10.29]
*
    ADD [  0021+  0027]  0079  3  5.0   57.00    0.02 12.67   2.26  n/a   0.000
*
    ADD [  0079+  0078]  0079  1  5.0  135.77    0.05 10.83   2.26  n/a   0.000
*
    CHANNEL[ 2:  0079]   0080  1  5.0  135.77    0.05 11.33   2.26  n/a   0.000
*
    READ STORM                 10.0
    [ Ptot= 25.00 mm ]
    fname : C:\Users\pchiocchio\AppData\Local\Temp\28e483ab-ebba-4caf-9e59-d34cfb3502df\97451176-a954-4555-8422-
    remark: 25MM4HRC_10min Edited 2012
*
 ** CALIB NASHYD         0020  1  5.0    9.50    0.01  6.58   2.26 0.09   0.000
    [CN=75.0         ]
    [ N = 2.5:Tp 3.98]
*
    ADD [  0020+  0080]  0106  3  5.0  145.27    0.05 10.67   2.26  n/a   0.000
*
    READ STORM                 10.0
    [ Ptot= 25.00 mm ]
    fname : C:\Users\pchiocchio\AppData\Local\Temp\28e483ab-ebba-4caf-9e59-d34cfb3502df\97451176-a954-4555-8422-
    remark: 25MM4HRC_10min Edited 2012
*
 ** CALIB NASHYD         0019  1  5.0   18.32    0.01  8.67   2.26 0.09   0.000
    [CN=75.0         ]
    [ N = 2.5:Tp 6.17]
*
    ADD [  0106+  0019]  0018  3  5.0  163.59    0.06 10.50   2.26  n/a   0.000
*
    CHANNEL[ 2:  0018]   0081  1  5.0  163.59    0.06 10.58   2.26  n/a   0.000
*
    READ STORM                 10.0
    [ Ptot= 25.00 mm ]
    fname : C:\Users\pchiocchio\AppData\Local\Temp\28e483ab-ebba-4caf-9e59-d34cfb3502df\97451176-a954-4555-8422-
    remark: 25MM4HRC_10min Edited 2012
*
 ** CALIB NASHYD         0036  1  5.0    6.46    0.01  5.17   2.26 0.09   0.000
    [CN=75.0         ]
    [ N = 2.5:Tp 2.48]
*
    ADD [  0036+  0081]  0035  3  5.0  170.05    0.06 10.17   2.26  n/a   0.000
*
    CHANNEL[ 2:  0035]   0082  1  5.0  170.05    0.06 10.83   2.26  n/a   0.000
*
    READ STORM                 10.0
    [ Ptot= 25.00 mm ]
    fname : C:\Users\pchiocchio\AppData\Local\Temp\28e483ab-ebba-4caf-9e59-d34cfb3502df\97451176-a954-4555-8422-
    remark: 25MM4HRC_10min Edited 2012
*
 ** CALIB NASHYD         0044  1  5.0   24.38    0.01 13.25   2.26 0.09   0.000
    [CN=75.0         ]
    [ N = 2.5:Tp10.73]
*
    ADD [  0044+  0082]  0056  3  5.0  194.43    0.06 11.00   2.26  n/a   0.000
*
    CHANNEL[ 2:  0056]   0083  1  5.0  194.43    0.06 11.75   2.26  n/a   0.000
*
    READ STORM                 10.0
    [ Ptot= 25.00 mm ]
    fname : C:\Users\pchiocchio\AppData\Local\Temp\28e483ab-ebba-4caf-9e59-d34cfb3502df\97451176-a954-4555-8422-
    remark: 25MM4HRC_10min Edited 2012
*
 ** CALIB NASHYD         0043  1  5.0   10.09    0.01  4.75   2.36 0.09   0.000
    [CN=76.0         ]
    [ N = 2.5:Tp 2.02]
*
    READ STORM                 10.0
    [ Ptot= 25.00 mm ]
    fname : C:\Users\pchiocchio\AppData\Local\Temp\28e483ab-ebba-4caf-9e59-d34cfb3502df\97451176-a954-4555-8422-
    remark: 25MM4HRC_10min Edited 2012
*
 ** CALIB NASHYD         0045  1  5.0    5.34    0.01  4.25   2.36 0.09   0.000
    [CN=76.0         ]
    [ N = 2.5:Tp 1.39]
*
    ADD [  0043+  0045]  0086  3  5.0   15.43    0.02  4.50   2.36  n/a   0.000
*
    ADD [  0086+  0083]  0086  1  5.0  209.86    0.07 11.33   2.26  n/a   0.000
*
    CHANNEL[ 2:  0086]   0085  1  5.0  209.86    0.07 11.67   2.26  n/a   0.000
*
    READ STORM                 10.0
    [ Ptot= 25.00 mm ]
    fname : C:\Users\pchiocchio\AppData\Local\Temp\28e483ab-ebba-4caf-9e59-d34cfb3502df\97451176-a954-4555-8422-
```

```
    remark: 25MM4HRC_10min Edited 2012
*
 ** CALIB NASHYD         0017  1  5.0    7.10    0.01  6.08   2.26 0.09   0.000
    [CN=75.0         ]
    [ N = 2.5:Tp 3.47]
*
    CHANNEL[ 2:  0017]   0084  1  5.0    7.10    0.01  7.08   2.25  n/a   0.000
*
    READ STORM                 10.0
    [ Ptot= 25.00 mm ]
    fname : C:\Users\pchiocchio\AppData\Local\Temp\28e483ab-ebba-4caf-9e59-d34cfb3502df\97451176-a954-4555-8422-
    remark: 25MM4HRC_10min Edited 2012
*
 ** CALIB NASHYD         0042  1  5.0   33.34    0.03  5.67   2.36 0.09   0.000
    [CN=76.0         ]
    [ N = 2.5:Tp 3.02]
*
    READ STORM                 10.0
    [ Ptot= 25.00 mm ]
    fname : C:\Users\pchiocchio\AppData\Local\Temp\28e483ab-ebba-4caf-9e59-d34cfb3502df\97451176-a954-4555-8422-
    remark: 25MM4HRC_10min Edited 2012
*
 ** CALIB NASHYD         0046  1  5.0   75.42    0.04  8.25   2.36 0.09   0.000
    [CN=76.0         ]
    [ N = 2.5:Tp 5.71]
*
    ADD [  0042+  0046]  0055  3  5.0  108.76    0.07  6.67   2.36  n/a   0.000
*
    ADD [  0055+  0084]  0055  1  5.0  115.86    0.07  6.67   2.36  n/a   0.000
*
    ADD [  0055+  0085]  0055  3  5.0  325.72    0.12  8.17   2.30  n/a   0.000
*
    CHANNEL[ 2:  0055]   0087  1  5.0  325.72    0.12  8.50   2.30  n/a   0.000
*
    READ STORM                 10.0
    [ Ptot= 25.00 mm ]
    fname : C:\Users\pchiocchio\AppData\Local\Temp\28e483ab-ebba-4caf-9e59-d34cfb3502df\97451176-a954-4555-8422-
    remark: 25MM4HRC_10min Edited 2012
*
 ** CALIB NASHYD         0006  1  5.0   22.56    0.01  7.67   2.26 0.09   0.000
    [CN=75.0         ]
    [ N = 2.5:Tp 5.09]
*
    CHANNEL[ 2:  0006]   0091  1  5.0   22.56    0.01  8.08   2.26  n/a   0.000
*
    READ STORM                 10.0
    [ Ptot= 25.00 mm ]
    fname : C:\Users\pchiocchio\AppData\Local\Temp\28e483ab-ebba-4caf-9e59-d34cfb3502df\97451176-a954-4555-8422-
    remark: 25MM4HRC_10min Edited 2012
*
 ** CALIB NASHYD         0008  1  5.0    6.20    0.01  5.17   2.26 0.09   0.000
    [CN=75.0         ]
    [ N = 2.5:Tp 2.54]
*
    ADD [  0008+  0091]  0011  3  5.0   28.76    0.02  6.75   2.26  n/a   0.000
*
    CHANNEL[ 2:  0011]   0092  1  5.0   28.76    0.02  7.25   2.26  n/a   0.000
*
    READ STORM                 10.0
    [ Ptot= 25.00 mm ]
    fname : C:\Users\pchiocchio\AppData\Local\Temp\28e483ab-ebba-4caf-9e59-d34cfb3502df\97451176-a954-4555-8422-
    remark: 25MM4HRC_10min Edited 2012
*
 ** CALIB NASHYD         0038  1  5.0    7.23    0.01  6.67   2.25 0.09   0.000
    [CN=75.0         ]
    [ N = 2.5:Tp 4.06]
*
    ADD [  0038+  0092]  0052  3  5.0   35.99    0.02  7.08   2.26  n/a   0.000
*
    READ STORM                 10.0
    [ Ptot= 25.00 mm ]
    fname : C:\Users\pchiocchio\AppData\Local\Temp\28e483ab-ebba-4caf-9e59-d34cfb3502df\97451176-a954-4555-8422-
    remark: 25MM4HRC_10min Edited 2012
*
 ** CALIB NASHYD         0007  1  5.0    1.34    0.00  4.00   2.25 0.09   0.000
    [CN=75.0         ]
    [ N = 2.5:Tp 1.07]
*
    CHANNEL[ 2:  0007]   0089  1  5.0    1.34    0.00  4.42   2.25  n/a   0.000
*
    READ STORM                 10.0
    [ Ptot= 25.00 mm ]
    fname : C:\Users\pchiocchio\AppData\Local\Temp\28e483ab-ebba-4caf-9e59-d34cfb3502df\97451176-a954-4555-8422-
    remark: 25MM4HRC_10min Edited 2012
*
 ** CALIB NASHYD         0009  1  5.0    5.08    0.00  5.42   2.25 0.09   0.000
    [CN=75.0         ]
    [ N = 2.5:Tp 2.82]
*
    ADD [  0089+  0009]  0010  3  5.0    6.42    0.01  4.92   2.25  n/a   0.000
*
    READ STORM                 10.0
    [ Ptot= 25.00 mm ]
    fname : C:\Users\pchiocchio\AppData\Local\Temp\28e483ab-ebba-4caf-9e59-d34cfb3502df\97451176-a954-4555-8422-
    remark: 25MM4HRC_10min Edited 2012
```

```
*
 ** CALIB NASHYD         0100  1  5.0   14.67    0.02  4.17   1.67 0.07   0.000
    [CN=68.0         ]
    [ N = 2.5:Tp 1.29]
*
    READ STORM                 10.0
    [ Ptot= 25.00 mm ]
    fname : C:\Users\pchiocchio\AppData\Local\Temp\28e483ab-ebba-4caf-9e59-d34cfb3502df\97451176-a954-4555-8422-
    remark: 25MM4HRC_10min Edited 2012
*
 ** CALIB NASHYD         0102  1  5.0    0.88    0.00  3.00   1.67 0.07   0.000
    [CN=68.0         ]
    [ N = 2.5:Tp 0.62]
*
    ADD [  0100+  0102]  0107  3  5.0   15.55    0.02  4.08   1.67  n/a   0.000
*
    ADD [  0010+  0107]  0109  3  5.0   21.97    0.03  4.25   1.84  n/a   0.000
*
    CHANNEL[ 2:  0109]   0094  1  5.0   21.97    0.02  5.00   1.84  n/a   0.000
*
    READ STORM                 10.0
    [ Ptot= 25.00 mm ]
    fname : C:\Users\pchiocchio\AppData\Local\Temp\28e483ab-ebba-4caf-9e59-d34cfb3502df\97451176-a954-4555-8422-
    remark: 25MM4HRC_10min Edited 2012
*
 ** CALIB NASHYD         0037  1  5.0    9.00    0.01  7.67   2.25 0.09   0.000
    [CN=75.0         ]
    [ N = 2.5:Tp 5.09]
*
    ADD [  0037+  0094]  0053  3  5.0   30.97    0.03  5.17   1.96  n/a   0.000
*
    READ STORM                 10.0
    [ Ptot= 25.00 mm ]
    fname : C:\Users\pchiocchio\AppData\Local\Temp\28e483ab-ebba-4caf-9e59-d34cfb3502df\97451176-a954-4555-8422-
    remark: 25MM4HRC_10min Edited 2012
*
 ** CALIB NASHYD         0013  1  5.0    7.42    0.01  6.25   2.25 0.09   0.000
    [CN=75.0         ]
    [ N = 2.5:Tp 3.66]
*
    READ STORM                 10.0
    [ Ptot= 25.00 mm ]
    fname : C:\Users\pchiocchio\AppData\Local\Temp\28e483ab-ebba-4caf-9e59-d34cfb3502df\97451176-a954-4555-8422-
    remark: 25MM4HRC_10min Edited 2012
*
 ** CALIB NASHYD         0014  1  5.0    4.74    0.00  5.25   2.25 0.09   0.000
    [CN=75.0         ]
    [ N = 2.5:Tp 2.60]
*
    READ STORM                 10.0
    [ Ptot= 25.00 mm ]
    fname : C:\Users\pchiocchio\AppData\Local\Temp\28e483ab-ebba-4caf-9e59-d34cfb3502df\97451176-a954-4555-8422-
    remark: 25MM4HRC_10min Edited 2012
*
 ** CALIB NASHYD         0015  1  5.0    7.40    0.01  6.42   2.25 0.09   0.000
    [CN=75.0         ]
    [ N = 2.5:Tp 3.83]
*
    READ STORM                 10.0
    [ Ptot= 25.00 mm ]
    fname : C:\Users\pchiocchio\AppData\Local\Temp\28e483ab-ebba-4caf-9e59-d34cfb3502df\97451176-a954-4555-8422-
    remark: 25MM4HRC_10min Edited 2012
*
 ** CALIB NASHYD         0105  1  5.0    6.60    0.00  6.42   2.25 0.09   0.000
    [CN=75.0         ]
    [ N = 2.5:Tp 3.83]
*
    ADD [  0105+  0013]  0012  3  5.0   14.02    0.01  6.33   2.25  n/a   0.000
*
    ADD [  0012+  0014]  0012  1  5.0   18.76    0.02  5.92   2.25  n/a   0.000
*
    ADD [  0012+  0015]  0012  3  5.0   26.16    0.02  6.00   2.25  n/a   0.000
*
    CHANNEL[ 2:  0012]   0093  1  5.0   26.16    0.02  6.50   2.25  n/a   0.000
*
    READ STORM                 10.0
    [ Ptot= 25.00 mm ]
    fname : C:\Users\pchiocchio\AppData\Local\Temp\28e483ab-ebba-4caf-9e59-d34cfb3502df\97451176-a954-4555-8422-
    remark: 25MM4HRC_10min Edited 2012
*
 ** CALIB NASHYD         0039  1  5.0   13.25    0.01  6.58   2.26 0.09   0.000
    [CN=75.0         ]
    [ N = 2.5:Tp 4.05]
*
    ADD [  0039+  0093]  0051  3  5.0   39.41    0.03  6.58   2.26  n/a   0.000
*
    READ STORM                 10.0
    [ Ptot= 25.00 mm ]
    fname : C:\Users\pchiocchio\AppData\Local\Temp\28e483ab-ebba-4caf-9e59-d34cfb3502df\97451176-a954-4555-8422-
    remark: 25MM4HRC_10min Edited 2012
*
 ** CALIB NASHYD         0040  1  5.0    7.26    0.01  6.25   2.25 0.09   0.000
    [CN=75.0         ]
    [ N = 2.5:Tp 3.69]
*
```

```
    READ STORM                 10.0
    [ Ptot= 25.00 mm ]
    fname : C:\Users\pchiocchio\AppData\Local\Temp\28e483ab-ebba-4caf-9e59-d34cfb3502df\97451176-a954-4555-8422-
    remark: 25MM4HRC_10min Edited 2012
*
 ** CALIB NASHYD         0108  1  5.0    4.10    0.01  3.00   1.67 0.07   0.000
    [CN=68.0         ]
    [ N = 2.5:Tp 0.62]
*
    CHANNEL[ 2:  0108]   0101  1  5.0    4.10    0.01  3.50   1.67  n/a   0.000
*
    ADD [  0101+  0040]  0090  3  5.0   11.36    0.01  4.25   2.04  n/a   0.000
*
    ADD [  0090+  0051]  0090  1  5.0   50.77    0.04  6.25   2.21  n/a   0.000
*
    ADD [  0090+  0052]  0090  3  5.0   86.76    0.06  6.58   2.23  n/a   0.000
*
    ADD [  0090+  0053]  0090  1  5.0  117.73    0.08  5.83   2.16  n/a   0.000
*
    CHANNEL[ 2:  0090]   0095  1  5.0  117.73    0.08  6.08   2.16  n/a   0.000
*
    READ STORM                 10.0
    [ Ptot= 25.00 mm ]
    fname : C:\Users\pchiocchio\AppData\Local\Temp\28e483ab-ebba-4caf-9e59-d34cfb3502df\97451176-a954-4555-8422-
    remark: 25MM4HRC_10min Edited 2012
*
 ** CALIB NASHYD         0041  1  5.0   12.70    0.01  5.83   2.26 0.09   0.000
    [CN=75.0         ]
    [ N = 2.5:Tp 3.25]
*
    ADD [  0041+  0095]  0050  3  5.0  130.43    0.09  6.08   2.17  n/a   0.000
*
    READ STORM                 10.0
    [ Ptot= 25.00 mm ]
    fname : C:\Users\pchiocchio\AppData\Local\Temp\28e483ab-ebba-4caf-9e59-d34cfb3502df\97451176-a954-4555-8422-
    remark: 25MM4HRC_10min Edited 2012
*
 ** CALIB NASHYD         0047  1  5.0   71.95    0.04  7.67   2.36 0.09   0.000
    [CN=76.0         ]
    [ N = 2.5:Tp 5.10]
*
    ADD [  0047+  0050]  0054  3  5.0  202.38    0.13  6.42   2.24  n/a   0.000
*
    ADD [  0054+  0087]  0054  1  5.0  528.10    0.25  7.08   2.27  n/a   0.000
*
    CHANNEL[ 2:  0054]   0088  1  5.0  528.10    0.25  7.33   2.27  n/a   0.000
*
    READ STORM                 10.0
    [ Ptot= 25.00 mm ]
    fname : C:\Users\pchiocchio\AppData\Local\Temp\28e483ab-ebba-4caf-9e59-d34cfb3502df\97451176-a954-4555-8422-
    remark: 25MM4HRC_10min Edited 2012
*
 ** CALIB NASHYD         0048  1  5.0   34.24    0.04  4.58   1.98 0.08   0.000
    [CN=72.0         ]
    [ N = 2.5:Tp 1.82]
*
    ADD [  0048+  0088]  0049  3  5.0  562.34    0.27  6.67   2.26  n/a   0.000
*
```

```
==========================================================================================

       V    V   I    SSSSS  U   U    A    L              (v 6.2.2001)
       V    V   I    SS     U   U   A A   L
        V  V    I     SS    U   U  AAAAA  L
        V  V    I      SS   U   U  A   A  L
         VV     I    SSSSS  UUUUU  A   A  LLLLL

        OOO   TTTTT  TTTTT  H   H  Y   Y  M   M   OOO    TM
       O   O    T      T    H   H   Y Y   MM MM  O   O
       O   O    T      T    H   H    Y    M   M  O   O
        OOO     T      T    H   H    Y    M   M   OOO
Developed and Distributed by Smart City Water Inc
Copyright 2007 - 2020 Smart City Water Inc
All rights reserved.


                  *****  S U M M A R Y   O U T P U T  *****


  Input   filename: C:\Program Files (x86)\Visual OTTHYMO 6.2\VO2\voin.dat
  Output  filename: C:\Users\pchiocchio\AppData\Local\Civica\VH5\d59fad6f-510d-48b8-a35a-1bee91f156cc\f70e7ec4-9c6f-4862-9f67-
9fb471b2e914\s
  Summary filename: C:\Users\pchiocchio\AppData\Local\Civica\VH5\d59fad6f-510d-48b8-a35a-1bee91f156cc\f70e7ec4-9c6f-4862-9f67-
9fb471b2e914\s


DATE: 01/23/2021                          TIME: 05:11:29

USER:


COMMENTS: ____________________________________________________________


  ************************************************
  ** SIMULATION : 2 - Year (6hr AES)            **
  ************************************************

  W/E COMMAND             HYD ID   DT    AREA  ' Qpeak Tpeak   R.V. R.C.   Qbase
                                  min     ha   '  cms   hrs     mm          cms

      START @  0.00 hrs
      --------------------
    READ STORM                 15.0
    [ Ptot= 36.00 mm ]
    fname : C:\Users\pchiocchio\AppData\Local\Temp\6592e097-c06d-439e-920e-0bdc1e2fe23c\7f7866ec-ed8a-491d-87e1-
    remark: 2 Year 6 Hour AES (Bloor, TRCA)
*
 ** CALIB NASHYD         0022  1  5.0    1.47    0.07  2.75  12.14 0.34   0.000
    [CN=90.0         ]
    [ N = 3.0:Tp 0.10]
*
    READ STORM                 15.0
    [ Ptot= 36.00 mm ]
    fname : C:\Users\pchiocchio\AppData\Local\Temp\6592e097-c06d-439e-920e-0bdc1e2fe23c\7f7866ec-ed8a-491d-87e1-
    remark: 2 Year 6 Hour AES (Bloor, TRCA)
*
 ** CALIB NASHYD         0023  1  5.0    6.75    0.20  2.92  12.46 0.35   0.000
    [CN=90.0         ]
    [ N = 3.0:Tp 0.26]
*
    READ STORM                 15.0
    [ Ptot= 36.00 mm ]
    fname : C:\Users\pchiocchio\AppData\Local\Temp\6592e097-c06d-439e-920e-0bdc1e2fe23c\7f7866ec-ed8a-491d-87e1-
    remark: 2 Year 6 Hour AES (Bloor, TRCA)
*
 ** CALIB NASHYD         0024  1  5.0    4.86    0.12  3.00  12.46 0.35   0.000
    [CN=90.0         ]
    [ N = 3.0:Tp 0.34]
*
    READ STORM                 15.0
    [ Ptot= 36.00 mm ]
    fname : C:\Users\pchiocchio\AppData\Local\Temp\6592e097-c06d-439e-920e-0bdc1e2fe23c\7f7866ec-ed8a-491d-87e1-
    remark: 2 Year 6 Hour AES (Bloor, TRCA)
*
 ** CALIB NASHYD         0025  1  5.0    5.72    0.18  2.83  12.45 0.35   0.000
    [CN=90.0         ]
    [ N = 3.0:Tp 0.23]
*
    ADD [  0022+  0023]  0026  3  5.0    8.22    0.24  2.83  12.40  n/a   0.000
*
    ADD [  0026+  0024]  0026  1  5.0   13.08    0.35  2.92  12.43  n/a   0.000
*
    ADD [  0026+  0025]  0026  3  5.0   18.80    0.52  2.83  12.43  n/a   0.000
*
    READ STORM                 15.0
    [ Ptot= 36.00 mm ]
    fname : C:\Users\pchiocchio\AppData\Local\Temp\6592e097-c06d-439e-920e-0bdc1e2fe23c\7f7866ec-ed8a-491d-87e1-
    remark: 2 Year 6 Hour AES (Bloor, TRCA)
*
 ** CALIB NASHYD         0028  1  5.0    2.78    0.09  2.83  12.45 0.35   0.000
    [CN=90.0         ]
    [ N = 3.0:Tp 0.23]
```

```
*
    READ STORM                 15.0
    [ Ptot= 36.00 mm ]
    fname : C:\Users\pchiocchio\AppData\Local\Temp\6592e097-c06d-439e-920e-0bdc1e2fe23c\7f7866ec-ed8a-491d-87e1-
    remark: 2 Year 6 Hour AES (Bloor, TRCA)
*
 ** CALIB NASHYD         0029  1  5.0    9.39    0.36  2.75  12.40 0.34   0.000
    [CN=90.0         ]
    [ N = 3.0:Tp 0.15]
*
    READ STORM                 15.0
    [ Ptot= 36.00 mm ]
    fname : C:\Users\pchiocchio\AppData\Local\Temp\6592e097-c06d-439e-920e-0bdc1e2fe23c\7f7866ec-ed8a-491d-87e1-
    remark: 2 Year 6 Hour AES (Bloor, TRCA)
*
 ** CALIB NASHYD         0030  1  5.0    1.69    0.07  2.75  12.14 0.34   0.000
    [CN=90.0         ]
    [ N = 3.0:Tp 0.10]
*
    READ STORM                 15.0
    [ Ptot= 36.00 mm ]
    fname : C:\Users\pchiocchio\AppData\Local\Temp\6592e097-c06d-439e-920e-0bdc1e2fe23c\7f7866ec-ed8a-491d-87e1-
    remark: 2 Year 6 Hour AES (Bloor, TRCA)
*
 ** CALIB NASHYD         0031  1  5.0    2.93    0.12  2.75  12.34 0.34   0.000
    [CN=90.0         ]
    [ N = 3.0:Tp 0.13]
*
    READ STORM                 15.0
    [ Ptot= 36.00 mm ]
    fname : C:\Users\pchiocchio\AppData\Local\Temp\6592e097-c06d-439e-920e-0bdc1e2fe23c\7f7866ec-ed8a-491d-87e1-
    remark: 2 Year 6 Hour AES (Bloor, TRCA)
*
 ** CALIB NASHYD         0032  1  5.0    4.99    0.18  2.75  12.41 0.34   0.000
    [CN=90.0         ]
    [ N = 3.0:Tp 0.16]
*
    ADD [  0029+  0030]  0033  3  5.0   11.08    0.44  2.75  12.36  n/a   0.000
*
    ADD [  0033+  0031]  0033  1  5.0   14.01    0.56  2.75  12.35  n/a   0.000
*
    ADD [  0033+  0032]  0033  3  5.0   19.00    0.74  2.75  12.37  n/a   0.000
*
    READ STORM                 15.0
    [ Ptot= 36.00 mm ]
    fname : C:\Users\pchiocchio\AppData\Local\Temp\6592e097-c06d-439e-920e-0bdc1e2fe23c\7f7866ec-ed8a-491d-87e1-
    remark: 2 Year 6 Hour AES (Bloor, TRCA)
*
 ** CALIB NASHYD         0001  1  5.0    1.24    0.01  4.67   6.10 0.17   0.000
    [CN=75.0         ]
    [ N = 2.5:Tp 1.47]
*
    READ STORM                 15.0
    [ Ptot= 36.00 mm ]
    fname : C:\Users\pchiocchio\AppData\Local\Temp\6592e097-c06d-439e-920e-0bdc1e2fe23c\7f7866ec-ed8a-491d-87e1-
    remark: 2 Year 6 Hour AES (Bloor, TRCA)
*
 ** CALIB NASHYD         0002  1  5.0    1.96    0.01  5.17   6.11 0.17   0.000
    [CN=75.0         ]
    [ N = 2.5:Tp 1.93]
*
    READ STORM                 15.0
    [ Ptot= 36.00 mm ]
    fname : C:\Users\pchiocchio\AppData\Local\Temp\6592e097-c06d-439e-920e-0bdc1e2fe23c\7f7866ec-ed8a-491d-87e1-
    remark: 2 Year 6 Hour AES (Bloor, TRCA)
*
 ** CALIB NASHYD         0004  1  5.0   40.84    0.06  8.42   6.11 0.17   0.000
    [CN=75.0         ]
    [ N = 2.5:Tp 5.06]
*
    ADD [  0001+  0002]  0096  3  5.0    3.20    0.01  4.92   6.11  n/a   0.000
*
    ADD [  0096+  0004]  0096  1  5.0   44.04    0.07  7.75   6.11  n/a   0.000
*
    CHANNEL[ 2:  0096]   0066  1  5.0   44.04    0.06  9.33   6.11  n/a   0.000
*
    READ STORM                 15.0
    [ Ptot= 36.00 mm ]
    fname : C:\Users\pchiocchio\AppData\Local\Temp\6592e097-c06d-439e-920e-0bdc1e2fe23c\7f7866ec-ed8a-491d-87e1-
    remark: 2 Year 6 Hour AES (Bloor, TRCA)
*
 ** CALIB NASHYD         0005  1  5.0   34.73    0.03 14.00   6.11 0.17   0.000
    [CN=75.0         ]
    [ N = 2.5:Tp10.71]
*
    ADD [  0005+  0066]  0003  3  5.0   78.77    0.08 10.00   6.11  n/a   0.000
*
    CHANNEL[ 2:  0003]   0078  1  5.0   78.77    0.08 11.17   6.11  n/a   0.000
*
    READ STORM                 15.0
    [ Ptot= 36.00 mm ]
    fname : C:\Users\pchiocchio\AppData\Local\Temp\6592e097-c06d-439e-920e-0bdc1e2fe23c\7f7866ec-ed8a-491d-87e1-
    remark: 2 Year 6 Hour AES (Bloor, TRCA)
*
 ** CALIB NASHYD         0021  1  5.0    2.77    0.01  4.92   6.11 0.17   0.000
```

```
    [CN=75.0         ]
    [ N = 2.5:Tp 1.68]
*
    READ STORM                 15.0
    [ Ptot= 36.00 mm ]
    fname : C:\Users\pchiocchio\AppData\Local\Temp\6592e097-c06d-439e-920e-0bdc1e2fe23c\7f7866ec-ed8a-491d-87e1-
    remark: 2 Year 6 Hour AES (Bloor, TRCA)
*
 ** CALIB NASHYD         0027  1  5.0   54.23    0.04 13.58   6.11 0.17   0.000
    [CN=75.0         ]
    [ N = 2.5:Tp10.29]
*
    ADD [  0021+  0027]  0079  3  5.0   57.00    0.04 13.42   6.11  n/a   0.000
*
    ADD [  0079+  0078]  0079  1  5.0  135.77    0.12 11.58   6.11  n/a   0.000
*
    CHANNEL[ 2:  0079]   0080  1  5.0  135.77    0.12 11.75   6.11  n/a   0.000
*
    READ STORM                 15.0
    [ Ptot= 36.00 mm ]
    fname : C:\Users\pchiocchio\AppData\Local\Temp\6592e097-c06d-439e-920e-0bdc1e2fe23c\7f7866ec-ed8a-491d-87e1-
    remark: 2 Year 6 Hour AES (Bloor, TRCA)
*
 ** CALIB NASHYD         0020  1  5.0    9.50    0.02  7.33   6.11 0.17   0.000
    [CN=75.0         ]
    [ N = 2.5:Tp 3.98]
*
    ADD [  0020+  0080]  0106  3  5.0  145.27    0.13 11.00   6.11  n/a   0.000
*
    READ STORM                 15.0
    [ Ptot= 36.00 mm ]
    fname : C:\Users\pchiocchio\AppData\Local\Temp\6592e097-c06d-439e-920e-0bdc1e2fe23c\7f7866ec-ed8a-491d-87e1-
    remark: 2 Year 6 Hour AES (Bloor, TRCA)
*
 ** CALIB NASHYD         0019  1  5.0   18.32    0.02  9.50   6.11 0.17   0.000
    [CN=75.0         ]
    [ N = 2.5:Tp 6.17]
*
    ADD [  0106+  0019]  0018  3  5.0  163.59    0.16 11.00   6.11  n/a   0.000
*
    CHANNEL[ 2:  0018]   0081  1  5.0  163.59    0.16 11.08   6.11  n/a   0.000
*
    READ STORM                 15.0
    [ Ptot= 36.00 mm ]
    fname : C:\Users\pchiocchio\AppData\Local\Temp\6592e097-c06d-439e-920e-0bdc1e2fe23c\7f7866ec-ed8a-491d-87e1-
    remark: 2 Year 6 Hour AES (Bloor, TRCA)
*
 ** CALIB NASHYD         0036  1  5.0    6.46    0.02  5.83   6.11 0.17   0.000
    [CN=75.0         ]
    [ N = 2.5:Tp 2.48]
*
    ADD [  0036+  0081]  0035  3  5.0  170.05    0.16 10.75   6.11  n/a   0.000
*
    CHANNEL[ 2:  0035]   0082  1  5.0  170.05    0.16 11.25   6.11  n/a   0.000
*
    READ STORM                 15.0
    [ Ptot= 36.00 mm ]
    fname : C:\Users\pchiocchio\AppData\Local\Temp\6592e097-c06d-439e-920e-0bdc1e2fe23c\7f7866ec-ed8a-491d-87e1-
    remark: 2 Year 6 Hour AES (Bloor, TRCA)
*
 ** CALIB NASHYD         0044  1  5.0   24.38    0.02 14.00   6.11 0.17   0.000
    [CN=75.0         ]
    [ N = 2.5:Tp10.73]
*
    ADD [  0044+  0082]  0056  3  5.0  194.43    0.18 11.42   6.11  n/a   0.000
*
    CHANNEL[ 2:  0056]   0083  1  5.0  194.43    0.18 12.00   6.11  n/a   0.000
*
    READ STORM                 15.0
    [ Ptot= 36.00 mm ]
    fname : C:\Users\pchiocchio\AppData\Local\Temp\6592e097-c06d-439e-920e-0bdc1e2fe23c\7f7866ec-ed8a-491d-87e1-
    remark: 2 Year 6 Hour AES (Bloor, TRCA)
*
 ** CALIB NASHYD         0043  1  5.0   10.09    0.04  5.33   6.36 0.18   0.000
    [CN=76.0         ]
    [ N = 2.5:Tp 2.02]
*
    READ STORM                 15.0
    [ Ptot= 36.00 mm ]
    fname : C:\Users\pchiocchio\AppData\Local\Temp\6592e097-c06d-439e-920e-0bdc1e2fe23c\7f7866ec-ed8a-491d-87e1-
    remark: 2 Year 6 Hour AES (Bloor, TRCA)
*
 ** CALIB NASHYD         0045  1  5.0    5.34    0.03  4.58   6.36 0.18   0.000
    [CN=76.0         ]
    [ N = 2.5:Tp 1.39]
*
    ADD [  0043+  0045]  0086  3  5.0   15.43    0.06  5.00   6.36  n/a   0.000
*
    ADD [  0086+  0083]  0086  1  5.0  209.86    0.18 11.67   6.13  n/a   0.000
*
    CHANNEL[ 2:  0086]   0085  1  5.0  209.86    0.18 11.83   6.13  n/a   0.000
*
    READ STORM                 15.0
    [ Ptot= 36.00 mm ]
    fname : C:\Users\pchiocchio\AppData\Local\Temp\6592e097-c06d-439e-920e-0bdc1e2fe23c\7f7866ec-ed8a-491d-87e1-
```

```
    remark: 2 Year 6 Hour AES (Bloor, TRCA)
*
 ** CALIB NASHYD         0017  1  5.0    7.10    0.02  6.92   6.11 0.17   0.000
    [CN=75.0         ]
    [ N = 2.5:Tp 3.47]
*
    CHANNEL[ 2:  0017]   0084  1  5.0    7.10    0.01  7.83   6.11  n/a   0.000
*
    READ STORM                 15.0
    [ Ptot= 36.00 mm ]
    fname : C:\Users\pchiocchio\AppData\Local\Temp\6592e097-c06d-439e-920e-0bdc1e2fe23c\7f7866ec-ed8a-491d-87e1-
    remark: 2 Year 6 Hour AES (Bloor, TRCA)
*
 ** CALIB NASHYD         0042  1  5.0   33.34    0.08  6.42   6.36 0.18   0.000
    [CN=76.0         ]
    [ N = 2.5:Tp 3.02]
*
    READ STORM                 15.0
    [ Ptot= 36.00 mm ]
    fname : C:\Users\pchiocchio\AppData\Local\Temp\6592e097-c06d-439e-920e-0bdc1e2fe23c\7f7866ec-ed8a-491d-87e1-
    remark: 2 Year 6 Hour AES (Bloor, TRCA)
*
 ** CALIB NASHYD         0046  1  5.0   75.42    0.11  9.08   6.36 0.18   0.000
    [CN=76.0         ]
    [ N = 2.5:Tp 5.71]
*
    ADD [  0042+  0046]  0055  3  5.0  108.76    0.18  7.50   6.36  n/a   0.000
*
    ADD [  0055+  0084]  0055  1  5.0  115.86    0.19  7.50   6.35  n/a   0.000
*
    ADD [  0055+  0085]  0055  3  5.0  325.72    0.34  8.75   6.21  n/a   0.000
*
    CHANNEL[ 2:  0055]   0087  1  5.0  325.72    0.34  8.92   6.21  n/a   0.000
*
    READ STORM                 15.0
    [ Ptot= 36.00 mm ]
    fname : C:\Users\pchiocchio\AppData\Local\Temp\6592e097-c06d-439e-920e-0bdc1e2fe23c\7f7866ec-ed8a-491d-87e1-
    remark: 2 Year 6 Hour AES (Bloor, TRCA)
*
 ** CALIB NASHYD         0006  1  5.0   22.56    0.03  8.42   6.11 0.17   0.000
    [CN=75.0         ]
    [ N = 2.5:Tp 5.09]
*
    CHANNEL[ 2:  0006]   0091  1  5.0   22.56    0.03  8.92   6.11  n/a   0.000
*
    READ STORM                 15.0
    [ Ptot= 36.00 mm ]
    fname : C:\Users\pchiocchio\AppData\Local\Temp\6592e097-c06d-439e-920e-0bdc1e2fe23c\7f7866ec-ed8a-491d-87e1-
    remark: 2 Year 6 Hour AES (Bloor, TRCA)
*
 ** CALIB NASHYD         0008  1  5.0    6.20    0.02  5.92   6.11 0.17   0.000
    [CN=75.0         ]
    [ N = 2.5:Tp 2.54]
*
    ADD [  0008+  0091]  0011  3  5.0   28.76    0.05  7.58   6.11  n/a   0.000
*
    CHANNEL[ 2:  0011]   0092  1  5.0   28.76    0.05  7.92   6.11  n/a   0.000
*
    READ STORM                 15.0
    [ Ptot= 36.00 mm ]
    fname : C:\Users\pchiocchio\AppData\Local\Temp\6592e097-c06d-439e-920e-0bdc1e2fe23c\7f7866ec-ed8a-491d-87e1-
    remark: 2 Year 6 Hour AES (Bloor, TRCA)
*
 ** CALIB NASHYD         0038  1  5.0    7.23    0.01  7.42   6.11 0.17   0.000
    [CN=75.0         ]
    [ N = 2.5:Tp 4.06]
*
    ADD [  0038+  0092]  0052  3  5.0   35.99    0.06  7.83   6.11  n/a   0.000
*
    READ STORM                 15.0
    [ Ptot= 36.00 mm ]
    fname : C:\Users\pchiocchio\AppData\Local\Temp\6592e097-c06d-439e-920e-0bdc1e2fe23c\7f7866ec-ed8a-491d-87e1-
    remark: 2 Year 6 Hour AES (Bloor, TRCA)
*
 ** CALIB NASHYD         0007  1  5.0    1.34    0.01  4.25   6.11 0.17   0.000
    [CN=75.0         ]
    [ N = 2.5:Tp 1.07]
*
    CHANNEL[ 2:  0007]   0089  1  5.0    1.34    0.01  4.50   6.10  n/a   0.000
*
    READ STORM                 15.0
    [ Ptot= 36.00 mm ]
    fname : C:\Users\pchiocchio\AppData\Local\Temp\6592e097-c06d-439e-920e-0bdc1e2fe23c\7f7866ec-ed8a-491d-87e1-
    remark: 2 Year 6 Hour AES (Bloor, TRCA)
*
 ** CALIB NASHYD         0009  1  5.0    5.08    0.01  6.25   6.11 0.17   0.000
    [CN=75.0         ]
    [ N = 2.5:Tp 2.82]
*
    ADD [  0089+  0009]  0010  3  5.0    6.42    0.02  5.33   6.11  n/a   0.000
*
    READ STORM                 15.0
    [ Ptot= 36.00 mm ]
    fname : C:\Users\pchiocchio\AppData\Local\Temp\6592e097-c06d-439e-920e-0bdc1e2fe23c\7f7866ec-ed8a-491d-87e1-
    remark: 2 Year 6 Hour AES (Bloor, TRCA)
```

```
*
 ** CALIB NASHYD         0102  1  5.0    0.88    0.00  3.58   4.64 0.13   0.000
    [CN=68.0         ]
    [ N = 2.5:Tp 0.62]
*
    READ STORM                 15.0
    [ Ptot= 36.00 mm ]
    fname : C:\Users\pchiocchio\AppData\Local\Temp\6592e097-c06d-439e-920e-0bdc1e2fe23c\7f7866ec-ed8a-491d-87e1-
    remark: 2 Year 6 Hour AES (Bloor, TRCA)
*
 ** CALIB NASHYD         0100  1  5.0   14.67    0.05  4.50   4.64 0.13   0.000
    [CN=68.0         ]
    [ N = 2.5:Tp 1.29]
*
    ADD [  0100+  0102]  0107  3  5.0   15.55    0.06  4.42   4.64  n/a   0.000
*
    ADD [  0010+  0107]  0109  3  5.0   21.97    0.07  4.58   5.07  n/a   0.000
*
    CHANNEL[ 2:  0109]   0094  1  5.0   21.97    0.06  5.50   5.07  n/a   0.000
*
    READ STORM                 15.0
    [ Ptot= 36.00 mm ]
    fname : C:\Users\pchiocchio\AppData\Local\Temp\6592e097-c06d-439e-920e-0bdc1e2fe23c\7f7866ec-ed8a-491d-87e1-
    remark: 2 Year 6 Hour AES (Bloor, TRCA)
*
 ** CALIB NASHYD         0037  1  5.0    9.00    0.01  8.42   6.11 0.17   0.000
    [CN=75.0         ]
    [ N = 2.5:Tp 5.09]
*
    ADD [  0037+  0094]  0053  3  5.0   30.97    0.07  5.67   5.37  n/a   0.000
*
    READ STORM                 15.0
    [ Ptot= 36.00 mm ]
    fname : C:\Users\pchiocchio\AppData\Local\Temp\6592e097-c06d-439e-920e-0bdc1e2fe23c\7f7866ec-ed8a-491d-87e1-
    remark: 2 Year 6 Hour AES (Bloor, TRCA)
*
 ** CALIB NASHYD         0013  1  5.0    7.42    0.02  7.08   6.11 0.17   0.000
    [CN=75.0         ]
    [ N = 2.5:Tp 3.66]
*
    READ STORM                 15.0
    [ Ptot= 36.00 mm ]
    fname : C:\Users\pchiocchio\AppData\Local\Temp\6592e097-c06d-439e-920e-0bdc1e2fe23c\7f7866ec-ed8a-491d-87e1-
    remark: 2 Year 6 Hour AES (Bloor, TRCA)
*
 ** CALIB NASHYD         0014  1  5.0    4.74    0.01  6.00   6.11 0.17   0.000
    [CN=75.0         ]
    [ N = 2.5:Tp 2.60]
*
    READ STORM                 15.0
    [ Ptot= 36.00 mm ]
    fname : C:\Users\pchiocchio\AppData\Local\Temp\6592e097-c06d-439e-920e-0bdc1e2fe23c\7f7866ec-ed8a-491d-87e1-
    remark: 2 Year 6 Hour AES (Bloor, TRCA)
*
 ** CALIB NASHYD         0015  1  5.0    7.40    0.01  7.25   6.11 0.17   0.000
    [CN=75.0         ]
    [ N = 2.5:Tp 3.83]
*
    READ STORM                 15.0
    [ Ptot= 36.00 mm ]
    fname : C:\Users\pchiocchio\AppData\Local\Temp\6592e097-c06d-439e-920e-0bdc1e2fe23c\7f7866ec-ed8a-491d-87e1-
    remark: 2 Year 6 Hour AES (Bloor, TRCA)
*
 ** CALIB NASHYD         0105  1  5.0    6.60    0.01  7.25   6.11 0.17   0.000
    [CN=75.0         ]
    [ N = 2.5:Tp 3.83]
*
    ADD [  0105+  0013]  0012  3  5.0   14.02    0.03  7.17   6.11  n/a   0.000
*
    ADD [  0012+  0014]  0012  1  5.0   18.76    0.04  6.75   6.11  n/a   0.000
*
    ADD [  0012+  0015]  0012  3  5.0   26.16    0.05  6.83   6.11  n/a   0.000
*
    CHANNEL[ 2:  0012]   0093  1  5.0   26.16    0.05  7.25   6.11  n/a   0.000
*
    READ STORM                 15.0
    [ Ptot= 36.00 mm ]
    fname : C:\Users\pchiocchio\AppData\Local\Temp\6592e097-c06d-439e-920e-0bdc1e2fe23c\7f7866ec-ed8a-491d-87e1-
    remark: 2 Year 6 Hour AES (Bloor, TRCA)
*
 ** CALIB NASHYD         0039  1  5.0   13.25    0.02  7.42   6.11 0.17   0.000
    [CN=75.0         ]
    [ N = 2.5:Tp 4.05]
*
    ADD [  0039+  0093]  0051  3  5.0   39.41    0.08  7.33   6.11  n/a   0.000
*
    READ STORM                 15.0
    [ Ptot= 36.00 mm ]
    fname : C:\Users\pchiocchio\AppData\Local\Temp\6592e097-c06d-439e-920e-0bdc1e2fe23c\7f7866ec-ed8a-491d-87e1-
    remark: 2 Year 6 Hour AES (Bloor, TRCA)
*
 ** CALIB NASHYD         0040  1  5.0    7.26    0.01  7.08   6.11 0.17   0.000
    [CN=75.0         ]
    [ N = 2.5:Tp 3.69]
*
```

```
    READ STORM                 15.0
    [ Ptot= 36.00 mm ]
    fname : C:\Users\pchiocchio\AppData\Local\Temp\6592e097-c06d-439e-920e-0bdc1e2fe23c\7f7866ec-ed8a-491d-87e1-
    remark: 2 Year 6 Hour AES (Bloor, TRCA)
*
 ** CALIB NASHYD         0108  1  5.0    4.10    0.02  3.58   4.64 0.13   0.000
    [CN=68.0         ]
    [ N = 2.5:Tp 0.62]
*
    CHANNEL[ 2:  0108]   0101  1  5.0    4.10    0.02  4.00   4.64  n/a   0.000
*
    ADD [  0101+  0040]  0090  3  5.0   11.36    0.03  4.25   5.58  n/a   0.000
*
    ADD [  0090+  0051]  0090  1  5.0   50.77    0.10  7.00   5.99  n/a   0.000
*
    ADD [  0090+  0052]  0090  3  5.0   86.76    0.15  7.33   6.04  n/a   0.000
*
    ADD [  0090+  0053]  0090  1  5.0  117.73    0.22  6.67   5.86  n/a   0.000
*
    CHANNEL[ 2:  0090]   0095  1  5.0  117.73    0.22  6.83   5.86  n/a   0.000
*
    READ STORM                 15.0
    [ Ptot= 36.00 mm ]
    fname : C:\Users\pchiocchio\AppData\Local\Temp\6592e097-c06d-439e-920e-0bdc1e2fe23c\7f7866ec-ed8a-491d-87e1-
    remark: 2 Year 6 Hour AES (Bloor, TRCA)
*
 ** CALIB NASHYD         0041  1  5.0   12.70    0.03  6.67   6.11 0.17   0.000
    [CN=75.0         ]
    [ N = 2.5:Tp 3.25]
*
    ADD [  0041+  0095]  0050  3  5.0  130.43    0.24  6.83   5.89  n/a   0.000
*
    READ STORM                 15.0
    [ Ptot= 36.00 mm ]
    fname : C:\Users\pchiocchio\AppData\Local\Temp\6592e097-c06d-439e-920e-0bdc1e2fe23c\7f7866ec-ed8a-491d-87e1-
    remark: 2 Year 6 Hour AES (Bloor, TRCA)
*
 ** CALIB NASHYD         0047  1  5.0   71.95    0.11  8.42   6.36 0.18   0.000
    [CN=76.0         ]
    [ N = 2.5:Tp 5.10]
*
    ADD [  0047+  0050]  0054  3  5.0  202.38    0.35  7.25   6.06  n/a   0.000
*
    ADD [  0054+  0087]  0054  1  5.0  528.10    0.68  7.83   6.15  n/a   0.000
*
    CHANNEL[ 2:  0054]   0088  1  5.0  528.10    0.68  8.08   6.15  n/a   0.000
*
    READ STORM                 15.0
    [ Ptot= 36.00 mm ]
    fname : C:\Users\pchiocchio\AppData\Local\Temp\6592e097-c06d-439e-920e-0bdc1e2fe23c\7f7866ec-ed8a-491d-87e1-
    remark: 2 Year 6 Hour AES (Bloor, TRCA)
*
 ** CALIB NASHYD         0048  1  5.0   34.24    0.11  5.08   5.42 0.15   0.000
    [CN=72.0         ]
    [ N = 2.5:Tp 1.82]
*
    ADD [  0048+  0088]  0049  3  5.0  562.34    0.73  7.58   6.10  n/a   0.000
*
 FINISH

==========================================================================================================
```

```
==========================================================================================

       V    V   I    SSSSS  U   U    A    L              (v 6.2.2001)
       V    V   I    SS     U   U   A A   L
        V  V    I     SS    U   U  AAAAA  L
        V  V    I      SS   U   U  A   A  L
         VV     I    SSSSS  UUUUU  A   A  LLLLL

        OOO   TTTTT  TTTTT  H   H  Y   Y  M   M   OOO    TM
       O   O    T      T    H   H   Y Y   MM MM  O   O
       O   O    T      T    H   H    Y    M   M  O   O
        OOO     T      T    H   H    Y    M   M   OOO
Developed and Distributed by Smart City Water Inc
Copyright 2007 - 2020 Smart City Water Inc
All rights reserved.


                  *****  S U M M A R Y   O U T P U T  *****


  Input   filename: C:\Program Files (x86)\Visual OTTHYMO 6.2\VO2\voin.dat
  Output  filename: C:\Users\pchiocchio\AppData\Local\Civica\VH5\d59fad6f-510d-48b8-a35a-1bee91f156cc\2e9dd175-de8a-4517-acb6-
11c4400e2adf\s
  Summary filename: C:\Users\pchiocchio\AppData\Local\Civica\VH5\d59fad6f-510d-48b8-a35a-1bee91f156cc\2e9dd175-de8a-4517-acb6-
11c4400e2adf\s


DATE: 02/02/2021                          TIME: 04:57:58

USER:


COMMENTS: ____________________________________________________________


  ************************************************
  ** SIMULATION : 2 - Year (12hr AES)           **
  ************************************************

  W/E COMMAND             HYD ID   DT    AREA  ' Qpeak Tpeak   R.V. R.C.   Qbase
                                  min     ha   '  cms   hrs     mm          cms

      START @  0.00 hrs
      --------------------
    READ STORM                 15.0
    [ Ptot= 42.00 mm ]
    fname : C:\Users\pchiocchio\AppData\Local\Temp\28e483ab-ebba-4caf-9e59-d34cfb3502df\595a4f76-b08c-4b58-8d09-
    remark: 2 Year 12 Hour AES (Bloor, TRCA)
*
 ** CALIB NASHYD         0022  1  5.0    1.47    0.05  5.25  16.56 0.39   0.000
    [CN=90.0         ]
    [ N = 3.0:Tp 0.10]
*
    READ STORM                 15.0
    [ Ptot= 42.00 mm ]
    fname : C:\Users\pchiocchio\AppData\Local\Temp\28e483ab-ebba-4caf-9e59-d34cfb3502df\595a4f76-b08c-4b58-8d09-
    remark: 2 Year 12 Hour AES (Bloor, TRCA)
*
 ** CALIB NASHYD         0023  1  5.0    6.75    0.19  5.33  16.99 0.40   0.000
    [CN=90.0         ]
    [ N = 3.0:Tp 0.26]
*
    READ STORM                 15.0
    [ Ptot= 42.00 mm ]
    fname : C:\Users\pchiocchio\AppData\Local\Temp\28e483ab-ebba-4caf-9e59-d34cfb3502df\595a4f76-b08c-4b58-8d09-
    remark: 2 Year 12 Hour AES (Bloor, TRCA)
*
 ** CALIB NASHYD         0024  1  5.0    4.86    0.12  5.33  17.00 0.40   0.000
    [CN=90.0         ]
    [ N = 3.0:Tp 0.34]
*
    READ STORM                 15.0
    [ Ptot= 42.00 mm ]
    fname : C:\Users\pchiocchio\AppData\Local\Temp\28e483ab-ebba-4caf-9e59-d34cfb3502df\595a4f76-b08c-4b58-8d09-
    remark: 2 Year 12 Hour AES (Bloor, TRCA)
*
 ** CALIB NASHYD         0025  1  5.0    5.72    0.17  5.25  16.98 0.40   0.000
    [CN=90.0         ]
    [ N = 3.0:Tp 0.23]
*
    ADD [  0022+  0023]  0026  3  5.0    8.22    0.23  5.25  16.92  n/a   0.000
*
    ADD [  0026+  0024]  0026  1  5.0   13.08    0.35  5.25  16.95  n/a   0.000
*
    ADD [  0026+  0025]  0026  3  5.0   18.80    0.52  5.25  16.96  n/a   0.000
*
    READ STORM                 15.0
    [ Ptot= 42.00 mm ]
    fname : C:\Users\pchiocchio\AppData\Local\Temp\28e483ab-ebba-4caf-9e59-d34cfb3502df\595a4f76-b08c-4b58-8d09-
    remark: 2 Year 12 Hour AES (Bloor, TRCA)
*
 ** CALIB NASHYD         0028  1  5.0    2.78    0.08  5.25  16.98 0.40   0.000
    [CN=90.0         ]
    [ N = 3.0:Tp 0.23]
```

```
*
    READ STORM                 15.0
    [ Ptot= 42.00 mm ]
    fname : C:\Users\pchiocchio\AppData\Local\Temp\28e483ab-ebba-4caf-9e59-d34cfb3502df\595a4f76-b08c-4b58-8d09-
    remark: 2 Year 12 Hour AES (Bloor, TRCA)
*
 ** CALIB NASHYD         0029  1  5.0    9.39    0.30  5.25  16.91 0.40   0.000
    [CN=90.0         ]
    [ N = 3.0:Tp 0.15]
*
    READ STORM                 15.0
    [ Ptot= 42.00 mm ]
    fname : C:\Users\pchiocchio\AppData\Local\Temp\28e483ab-ebba-4caf-9e59-d34cfb3502df\595a4f76-b08c-4b58-8d09-
    remark: 2 Year 12 Hour AES (Bloor, TRCA)
*
 ** CALIB NASHYD         0030  1  5.0    1.69    0.05  5.25  16.56 0.39   0.000
    [CN=90.0         ]
    [ N = 3.0:Tp 0.10]
*
    READ STORM                 15.0
    [ Ptot= 42.00 mm ]
    fname : C:\Users\pchiocchio\AppData\Local\Temp\28e483ab-ebba-4caf-9e59-d34cfb3502df\595a4f76-b08c-4b58-8d09-
    remark: 2 Year 12 Hour AES (Bloor, TRCA)
*
 ** CALIB NASHYD         0031  1  5.0    2.93    0.09  5.25  16.84 0.40   0.000
    [CN=90.0         ]
    [ N = 3.0:Tp 0.13]
*
    READ STORM                 15.0
    [ Ptot= 42.00 mm ]
    fname : C:\Users\pchiocchio\AppData\Local\Temp\28e483ab-ebba-4caf-9e59-d34cfb3502df\595a4f76-b08c-4b58-8d09-
    remark: 2 Year 12 Hour AES (Bloor, TRCA)
*
 ** CALIB NASHYD         0032  1  5.0    4.99    0.16  5.25  16.93 0.40   0.000
    [CN=90.0         ]
    [ N = 3.0:Tp 0.16]
*
    ADD [  0029+  0030]  0033  3  5.0   11.08    0.35  5.25  16.85  n/a   0.000
*
    ADD [  0033+  0031]  0033  1  5.0   14.01    0.45  5.25  16.85  n/a   0.000
*
    ADD [  0033+  0032]  0033  3  5.0   19.00    0.60  5.25  16.87  n/a   0.000
*
    READ STORM                 15.0
    [ Ptot= 42.00 mm ]
    fname : C:\Users\pchiocchio\AppData\Local\Temp\28e483ab-ebba-4caf-9e59-d34cfb3502df\595a4f76-b08c-4b58-8d09-
    remark: 2 Year 12 Hour AES (Bloor, TRCA)
*
 ** CALIB NASHYD         0001  1  5.0    1.24    0.01  7.25   8.77 0.21   0.000
    [CN=75.0         ]
    [ N = 2.5:Tp 1.47]
*
    READ STORM                 15.0
    [ Ptot= 42.00 mm ]
    fname : C:\Users\pchiocchio\AppData\Local\Temp\28e483ab-ebba-4caf-9e59-d34cfb3502df\595a4f76-b08c-4b58-8d09-
    remark: 2 Year 12 Hour AES (Bloor, TRCA)
*
 ** CALIB NASHYD         0002  1  5.0    1.96    0.01  7.83   8.77 0.21   0.000
    [CN=75.0         ]
    [ N = 2.5:Tp 1.93]
*
    READ STORM                 15.0
    [ Ptot= 42.00 mm ]
    fname : C:\Users\pchiocchio\AppData\Local\Temp\28e483ab-ebba-4caf-9e59-d34cfb3502df\595a4f76-b08c-4b58-8d09-
    remark: 2 Year 12 Hour AES (Bloor, TRCA)
*
 ** CALIB NASHYD         0004  1  5.0   40.84    0.08 11.42   8.78 0.21   0.000
    [CN=75.0         ]
    [ N = 2.5:Tp 5.06]
*
    ADD [  0001+  0002]  0096  3  5.0    3.20    0.01  7.58   8.77  n/a   0.000
*
    ADD [  0096+  0004]  0096  1  5.0   44.04    0.09 10.83   8.78  n/a   0.000
*
    CHANNEL[ 2:  0096]   0066  1  5.0   44.04    0.08 12.42   8.78  n/a   0.000
*
    READ STORM                 15.0
    [ Ptot= 42.00 mm ]
    fname : C:\Users\pchiocchio\AppData\Local\Temp\28e483ab-ebba-4caf-9e59-d34cfb3502df\595a4f76-b08c-4b58-8d09-
    remark: 2 Year 12 Hour AES (Bloor, TRCA)
*
 ** CALIB NASHYD         0005  1  5.0   34.73    0.04 17.08   8.77 0.21   0.000
    [CN=75.0         ]
    [ N = 2.5:Tp10.71]
*
    ADD [  0005+  0066]  0003  3  5.0   78.77    0.12 13.17   8.78  n/a   0.000
*
    CHANNEL[ 2:  0003]   0078  1  5.0   78.77    0.11 14.25   8.78  n/a   0.000
*
    READ STORM                 15.0
    [ Ptot= 42.00 mm ]
    fname : C:\Users\pchiocchio\AppData\Local\Temp\28e483ab-ebba-4caf-9e59-d34cfb3502df\595a4f76-b08c-4b58-8d09-
    remark: 2 Year 12 Hour AES (Bloor, TRCA)
*
 ** CALIB NASHYD         0021  1  5.0    2.77    0.01  7.50   8.78 0.21   0.000
```

```
    [CN=75.0         ]
    [ N = 2.5:Tp 1.68]
*
    READ STORM                 15.0
    [ Ptot= 42.00 mm ]
    fname : C:\Users\pchiocchio\AppData\Local\Temp\28e483ab-ebba-4caf-9e59-d34cfb3502df\595a4f76-b08c-4b58-8d09-
    remark: 2 Year 12 Hour AES (Bloor, TRCA)
*
 ** CALIB NASHYD         0027  1  5.0   54.23    0.06 16.67   8.77 0.21   0.000
    [CN=75.0         ]
    [ N = 2.5:Tp10.29]
*
    ADD [  0021+  0027]  0079  3  5.0   57.00    0.06 16.42   8.78  n/a   0.000
*
    ADD [  0079+  0078]  0079  1  5.0  135.77    0.17 14.67   8.78  n/a   0.000
*
    CHANNEL[ 2:  0079]   0080  1  5.0  135.77    0.17 15.08   8.78  n/a   0.000
*
    READ STORM                 15.0
    [ Ptot= 42.00 mm ]
    fname : C:\Users\pchiocchio\AppData\Local\Temp\28e483ab-ebba-4caf-9e59-d34cfb3502df\595a4f76-b08c-4b58-8d09-
    remark: 2 Year 12 Hour AES (Bloor, TRCA)
*
 ** CALIB NASHYD         0020  1  5.0    9.50    0.02 10.25   8.78 0.21   0.000
    [CN=75.0         ]
    [ N = 2.5:Tp 3.98]
*
    ADD [  0020+  0080]  0106  3  5.0  145.27    0.19 14.42   8.78  n/a   0.000
*
    READ STORM                 15.0
    [ Ptot= 42.00 mm ]
    fname : C:\Users\pchiocchio\AppData\Local\Temp\28e483ab-ebba-4caf-9e59-d34cfb3502df\595a4f76-b08c-4b58-8d09-
    remark: 2 Year 12 Hour AES (Bloor, TRCA)
*
 ** CALIB NASHYD         0019  1  5.0   18.32    0.03 12.67   8.78 0.21   0.000
    [CN=75.0         ]
    [ N = 2.5:Tp 6.17]
*
    ADD [  0106+  0019]  0018  3  5.0  163.59    0.22 14.17   8.78  n/a   0.000
*
    CHANNEL[ 2:  0018]   0081  1  5.0  163.59    0.21 14.42   8.78  n/a   0.000
*
    READ STORM                 15.0
    [ Ptot= 42.00 mm ]
    fname : C:\Users\pchiocchio\AppData\Local\Temp\28e483ab-ebba-4caf-9e59-d34cfb3502df\595a4f76-b08c-4b58-8d09-
    remark: 2 Year 12 Hour AES (Bloor, TRCA)
*
 ** CALIB NASHYD         0036  1  5.0    6.46    0.02  8.58   8.78 0.21   0.000
    [CN=75.0         ]
    [ N = 2.5:Tp 2.48]
*
    ADD [  0036+  0081]  0035  3  5.0  170.05    0.22 13.92   8.78  n/a   0.000
*
    CHANNEL[ 2:  0035]   0082  1  5.0  170.05    0.22 14.50   8.78  n/a   0.000
*
    READ STORM                 15.0
    [ Ptot= 42.00 mm ]
    fname : C:\Users\pchiocchio\AppData\Local\Temp\28e483ab-ebba-4caf-9e59-d34cfb3502df\595a4f76-b08c-4b58-8d09-
    remark: 2 Year 12 Hour AES (Bloor, TRCA)
*
 ** CALIB NASHYD         0044  1  5.0   24.38    0.03 17.08   8.77 0.21   0.000
    [CN=75.0         ]
    [ N = 2.5:Tp10.73]
*
    ADD [  0044+  0082]  0056  3  5.0  194.43    0.25 14.67   8.78  n/a   0.000
*
    CHANNEL[ 2:  0056]   0083  1  5.0  194.43    0.24 15.08   8.78  n/a   0.000
*
    READ STORM                 15.0
    [ Ptot= 42.00 mm ]
    fname : C:\Users\pchiocchio\AppData\Local\Temp\28e483ab-ebba-4caf-9e59-d34cfb3502df\595a4f76-b08c-4b58-8d09-
    remark: 2 Year 12 Hour AES (Bloor, TRCA)
*
 ** CALIB NASHYD         0043  1  5.0   10.09    0.04  8.00   9.12 0.22   0.000
    [CN=76.0         ]
    [ N = 2.5:Tp 2.02]
*
    READ STORM                 15.0
    [ Ptot= 42.00 mm ]
    fname : C:\Users\pchiocchio\AppData\Local\Temp\28e483ab-ebba-4caf-9e59-d34cfb3502df\595a4f76-b08c-4b58-8d09-
    remark: 2 Year 12 Hour AES (Bloor, TRCA)
*
 ** CALIB NASHYD         0045  1  5.0    5.34    0.03  7.08   9.12 0.22   0.000
    [CN=76.0         ]
    [ N = 2.5:Tp 1.39]
*
    ADD [  0043+  0045]  0086  3  5.0   15.43    0.07  7.58   9.12  n/a   0.000
*
    ADD [  0086+  0083]  0086  1  5.0  209.86    0.25 14.58   8.80  n/a   0.000
*
    CHANNEL[ 2:  0086]   0085  1  5.0  209.86    0.25 14.75   8.80  n/a   0.000
*
    READ STORM                 15.0
    [ Ptot= 42.00 mm ]
    fname : C:\Users\pchiocchio\AppData\Local\Temp\28e483ab-ebba-4caf-9e59-d34cfb3502df\595a4f76-b08c-4b58-8d09-
```

```
    remark: 2 Year 12 Hour AES (Bloor, TRCA)
*
 ** CALIB NASHYD         0017  1  5.0    7.10    0.02  9.67   8.78 0.21   0.000
    [CN=75.0         ]
    [ N = 2.5:Tp 3.47]
*
    CHANNEL[ 2:  0017]   0084  1  5.0    7.10    0.02 10.67   8.78  n/a   0.000
*
    READ STORM                 15.0
    [ Ptot= 42.00 mm ]
    fname : C:\Users\pchiocchio\AppData\Local\Temp\28e483ab-ebba-4caf-9e59-d34cfb3502df\595a4f76-b08c-4b58-8d09-
    remark: 2 Year 12 Hour AES (Bloor, TRCA)
*
 ** CALIB NASHYD         0042  1  5.0   33.34    0.11  9.17   9.13 0.22   0.000
    [CN=76.0         ]
    [ N = 2.5:Tp 3.02]
*
    READ STORM                 15.0
    [ Ptot= 42.00 mm ]
    fname : C:\Users\pchiocchio\AppData\Local\Temp\28e483ab-ebba-4caf-9e59-d34cfb3502df\595a4f76-b08c-4b58-8d09-
    remark: 2 Year 12 Hour AES (Bloor, TRCA)
*
 ** CALIB NASHYD         0046  1  5.0   75.42    0.14 12.17   9.13 0.22   0.000
    [CN=76.0         ]
    [ N = 2.5:Tp 5.71]
*
    ADD [  0042+  0046]  0055  3  5.0  108.76    0.23 10.42   9.13  n/a   0.000
*
    ADD [  0055+  0084]  0055  1  5.0  115.86    0.25 10.50   9.10  n/a   0.000
*
    ADD [  0055+  0085]  0055  3  5.0  325.72    0.47 12.25   8.91  n/a   0.000
*
    CHANNEL[ 2:  0055]   0087  1  5.0  325.72    0.47 12.08   8.91  n/a   0.000
*
    READ STORM                 15.0
    [ Ptot= 42.00 mm ]
    fname : C:\Users\pchiocchio\AppData\Local\Temp\28e483ab-ebba-4caf-9e59-d34cfb3502df\595a4f76-b08c-4b58-8d09-
    remark: 2 Year 12 Hour AES (Bloor, TRCA)
*
 ** CALIB NASHYD         0006  1  5.0   22.56    0.05 11.50   8.78 0.21   0.000
    [CN=75.0         ]
    [ N = 2.5:Tp 5.09]
*
    CHANNEL[ 2:  0006]   0091  1  5.0   22.56    0.05 11.92   8.78  n/a   0.000
*
    READ STORM                 15.0
    [ Ptot= 42.00 mm ]
    fname : C:\Users\pchiocchio\AppData\Local\Temp\28e483ab-ebba-4caf-9e59-d34cfb3502df\595a4f76-b08c-4b58-8d09-
    remark: 2 Year 12 Hour AES (Bloor, TRCA)
*
 ** CALIB NASHYD         0008  1  5.0    6.20    0.02  8.58   8.78 0.21   0.000
    [CN=75.0         ]
    [ N = 2.5:Tp 2.54]
*
    ADD [  0008+  0091]  0011  3  5.0   28.76    0.06 10.58   8.78  n/a   0.000
*
    CHANNEL[ 2:  0011]   0092  1  5.0   28.76    0.06 10.83   8.78  n/a   0.000
*
    READ STORM                 15.0
    [ Ptot= 42.00 mm ]
    fname : C:\Users\pchiocchio\AppData\Local\Temp\28e483ab-ebba-4caf-9e59-d34cfb3502df\595a4f76-b08c-4b58-8d09-
    remark: 2 Year 12 Hour AES (Bloor, TRCA)
*
 ** CALIB NASHYD         0038  1  5.0    7.23    0.02 10.33   8.78 0.21   0.000
    [CN=75.0         ]
    [ N = 2.5:Tp 4.06]
*
    ADD [  0038+  0092]  0052  3  5.0   35.99    0.08 10.83   8.78  n/a   0.000
*
    READ STORM                 15.0
    [ Ptot= 42.00 mm ]
    fname : C:\Users\pchiocchio\AppData\Local\Temp\28e483ab-ebba-4caf-9e59-d34cfb3502df\595a4f76-b08c-4b58-8d09-
    remark: 2 Year 12 Hour AES (Bloor, TRCA)
*
 ** CALIB NASHYD         0007  1  5.0    1.34    0.01  6.58   8.77 0.21   0.000
    [CN=75.0         ]
    [ N = 2.5:Tp 1.07]
*
    CHANNEL[ 2:  0007]   0089  1  5.0    1.34    0.01  6.92   8.77  n/a   0.000
*
    READ STORM                 15.0
    [ Ptot= 42.00 mm ]
    fname : C:\Users\pchiocchio\AppData\Local\Temp\28e483ab-ebba-4caf-9e59-d34cfb3502df\595a4f76-b08c-4b58-8d09-
    remark: 2 Year 12 Hour AES (Bloor, TRCA)
*
 ** CALIB NASHYD         0009  1  5.0    5.08    0.02  8.92   8.78 0.21   0.000
    [CN=75.0         ]
    [ N = 2.5:Tp 2.82]
*
    ADD [  0089+  0009]  0010  3  5.0    6.42    0.02  8.17   8.77  n/a   0.000
*
    READ STORM                 15.0
    [ Ptot= 42.00 mm ]
    fname : C:\Users\pchiocchio\AppData\Local\Temp\28e483ab-ebba-4caf-9e59-d34cfb3502df\595a4f76-b08c-4b58-8d09-
    remark: 2 Year 12 Hour AES (Bloor, TRCA)
```

```
*
 ** CALIB NASHYD         0100  1  5.0   14.67    0.06  6.92   6.76 0.16   0.000
    [CN=68.0         ]
    [ N = 2.5:Tp 1.29]
*
    READ STORM                 15.0
    [ Ptot= 42.00 mm ]
    fname : C:\Users\pchiocchio\AppData\Local\Temp\28e483ab-ebba-4caf-9e59-d34cfb3502df\595a4f76-b08c-4b58-8d09-
    remark: 2 Year 12 Hour AES (Bloor, TRCA)
*
 ** CALIB NASHYD         0102  1  5.0    0.88    0.01  5.83   6.75 0.16   0.000
    [CN=68.0         ]
    [ N = 2.5:Tp 0.62]
*
    ADD [  0100+  0102]  0107  3  5.0   15.55    0.06  6.83   6.76  n/a   0.000
*
    ADD [  0010+  0107]  0109  3  5.0   21.97    0.08  7.08   7.35  n/a   0.000
*
    CHANNEL[ 2:  0109]   0094  1  5.0   21.97    0.07  8.17   7.35  n/a   0.000
*
    READ STORM                 15.0
    [ Ptot= 42.00 mm ]
    fname : C:\Users\pchiocchio\AppData\Local\Temp\28e483ab-ebba-4caf-9e59-d34cfb3502df\595a4f76-b08c-4b58-8d09-
    remark: 2 Year 12 Hour AES (Bloor, TRCA)
*
 ** CALIB NASHYD         0037  1  5.0    9.00    0.02 11.50   8.78 0.21   0.000
    [CN=75.0         ]
    [ N = 2.5:Tp 5.09]
*
    ADD [  0037+  0094]  0053  3  5.0   30.97    0.09  8.42   7.76  n/a   0.000
*
    READ STORM                 15.0
    [ Ptot= 42.00 mm ]
    fname : C:\Users\pchiocchio\AppData\Local\Temp\28e483ab-ebba-4caf-9e59-d34cfb3502df\595a4f76-b08c-4b58-8d09-
    remark: 2 Year 12 Hour AES (Bloor, TRCA)
*
 ** CALIB NASHYD         0013  1  5.0    7.42    0.02  9.92   8.78 0.21   0.000
    [CN=75.0         ]
    [ N = 2.5:Tp 3.66]
*
    READ STORM                 15.0
    [ Ptot= 42.00 mm ]
    fname : C:\Users\pchiocchio\AppData\Local\Temp\28e483ab-ebba-4caf-9e59-d34cfb3502df\595a4f76-b08c-4b58-8d09-
    remark: 2 Year 12 Hour AES (Bloor, TRCA)
*
 ** CALIB NASHYD         0014  1  5.0    4.74    0.02  8.67   8.78 0.21   0.000
    [CN=75.0         ]
    [ N = 2.5:Tp 2.60]
*
    READ STORM                 15.0
    [ Ptot= 42.00 mm ]
    fname : C:\Users\pchiocchio\AppData\Local\Temp\28e483ab-ebba-4caf-9e59-d34cfb3502df\595a4f76-b08c-4b58-8d09-
    remark: 2 Year 12 Hour AES (Bloor, TRCA)
*
 ** CALIB NASHYD         0015  1  5.0    7.40    0.02 10.08   8.78 0.21   0.000
    [CN=75.0         ]
    [ N = 2.5:Tp 3.83]
*
    READ STORM                 15.0
    [ Ptot= 42.00 mm ]
    fname : C:\Users\pchiocchio\AppData\Local\Temp\28e483ab-ebba-4caf-9e59-d34cfb3502df\595a4f76-b08c-4b58-8d09-
    remark: 2 Year 12 Hour AES (Bloor, TRCA)
*
 ** CALIB NASHYD         0105  1  5.0    6.60    0.02 10.08   8.78 0.21   0.000
    [CN=75.0         ]
    [ N = 2.5:Tp 3.83]
*
    ADD [  0105+  0013]  0012  3  5.0   14.02    0.04 10.00   8.78  n/a   0.000
*
    ADD [  0012+  0014]  0012  1  5.0   18.76    0.05  9.50   8.78  n/a   0.000
*
    ADD [  0012+  0015]  0012  3  5.0   26.16    0.07  9.67   8.78  n/a   0.000
*
    CHANNEL[ 2:  0012]   0093  1  5.0   26.16    0.07 10.00   8.78  n/a   0.000
*
    READ STORM                 15.0
    [ Ptot= 42.00 mm ]
    fname : C:\Users\pchiocchio\AppData\Local\Temp\28e483ab-ebba-4caf-9e59-d34cfb3502df\595a4f76-b08c-4b58-8d09-
    remark: 2 Year 12 Hour AES (Bloor, TRCA)
*
 ** CALIB NASHYD         0039  1  5.0   13.25    0.03 10.33   8.78 0.21   0.000
    [CN=75.0         ]
    [ N = 2.5:Tp 4.05]
*
    ADD [  0039+  0093]  0051  3  5.0   39.41    0.10 10.08   8.78  n/a   0.000
*
    READ STORM                 15.0
    [ Ptot= 42.00 mm ]
    fname : C:\Users\pchiocchio\AppData\Local\Temp\28e483ab-ebba-4caf-9e59-d34cfb3502df\595a4f76-b08c-4b58-8d09-
    remark: 2 Year 12 Hour AES (Bloor, TRCA)
*
 ** CALIB NASHYD         0040  1  5.0    7.26    0.02  9.92   8.78 0.21   0.000
    [CN=75.0         ]
    [ N = 2.5:Tp 3.69]
*
```

```
    READ STORM                 15.0
    [ Ptot= 42.00 mm ]
    fname : C:\Users\pchiocchio\AppData\Local\Temp\28e483ab-ebba-4caf-9e59-d34cfb3502df\595a4f76-b08c-4b58-8d09-
    remark: 2 Year 12 Hour AES (Bloor, TRCA)
*
 ** CALIB NASHYD         0108  1  5.0    4.10    0.02  5.83   6.75 0.16   0.000
    [CN=68.0         ]
    [ N = 2.5:Tp 0.62]
*
    CHANNEL[ 2:  0108]   0101  1  5.0    4.10    0.02  6.33   6.75  n/a   0.000
*
    ADD [  0101+  0040]  0090  3  5.0   11.36    0.03  6.67   8.05  n/a   0.000
*
    ADD [  0090+  0051]  0090  1  5.0   50.77    0.13  9.83   8.61  n/a   0.000
*
    ADD [  0090+  0052]  0090  3  5.0   86.76    0.20 10.08   8.68  n/a   0.000
*
    ADD [  0090+  0053]  0090  1  5.0  117.73    0.28  9.50   8.44  n/a   0.000
*
    CHANNEL[ 2:  0090]   0095  1  5.0  117.73    0.28  9.58   8.44  n/a   0.000
*
    READ STORM                 15.0
    [ Ptot= 42.00 mm ]
    fname : C:\Users\pchiocchio\AppData\Local\Temp\28e483ab-ebba-4caf-9e59-d34cfb3502df\595a4f76-b08c-4b58-8d09-
    remark: 2 Year 12 Hour AES (Bloor, TRCA)
*
 ** CALIB NASHYD         0041  1  5.0   12.70    0.04  9.42   8.78 0.21   0.000
    [CN=75.0         ]
    [ N = 2.5:Tp 3.25]
*
    ADD [  0041+  0095]  0050  3  5.0  130.43    0.32  9.50   8.47  n/a   0.000
*
    READ STORM                 15.0
    [ Ptot= 42.00 mm ]
    fname : C:\Users\pchiocchio\AppData\Local\Temp\28e483ab-ebba-4caf-9e59-d34cfb3502df\595a4f76-b08c-4b58-8d09-
    remark: 2 Year 12 Hour AES (Bloor, TRCA)
*
 ** CALIB NASHYD         0047  1  5.0   71.95    0.15 11.50   9.13 0.22   0.000
    [CN=76.0         ]
    [ N = 2.5:Tp 5.10]
*
    ADD [  0047+  0050]  0054  3  5.0  202.38    0.46 10.08   8.70  n/a   0.000
*
    ADD [  0054+  0087]  0054  1  5.0  528.10    0.90 10.92   8.83  n/a   0.000
*
    CHANNEL[ 2:  0054]   0088  1  5.0  528.10    0.90 11.17   8.83  n/a   0.000
*
    READ STORM                 15.0
    [ Ptot= 42.00 mm ]
    fname : C:\Users\pchiocchio\AppData\Local\Temp\28e483ab-ebba-4caf-9e59-d34cfb3502df\595a4f76-b08c-4b58-8d09-
    remark: 2 Year 12 Hour AES (Bloor, TRCA)
*
 ** CALIB NASHYD         0048  1  5.0   34.24    0.13  7.75   7.83 0.19   0.000
    [CN=72.0         ]
    [ N = 2.5:Tp 1.82]
*
    ADD [  0048+  0088]  0049  3  5.0  562.34    0.97 10.50   8.77  n/a   0.000
*
```

```
==========================================================================================

       V    V   I    SSSSS  U   U    A    L              (v 6.2.2001)
       V    V   I    SS     U   U   A A   L
        V  V    I     SS    U   U  AAAAA  L
        V  V    I      SS   U   U  A   A  L
         VV     I    SSSSS  UUUUU  A   A  LLLLL

        OOO   TTTTT  TTTTT  H   H  Y   Y  M   M   OOO    TM
       O   O    T      T    H   H   Y Y   MM MM  O   O
       O   O    T      T    H   H    Y    M   M  O   O
        OOO     T      T    H   H    Y    M   M   OOO
Developed and Distributed by Smart City Water Inc
Copyright 2007 - 2020 Smart City Water Inc
All rights reserved.


                  *****  S U M M A R Y   O U T P U T  *****


  Input   filename: C:\Program Files (x86)\Visual OTTHYMO 6.2\VO2\voin.dat
  Output  filename: C:\Users\pchiocchio\AppData\Local\Civica\VH5\d59fad6f-510d-48b8-a35a-1bee91f156cc\f60e38de-06cf-4767-a34d-
7112b5f64698\s
  Summary filename: C:\Users\pchiocchio\AppData\Local\Civica\VH5\d59fad6f-510d-48b8-a35a-1bee91f156cc\f60e38de-06cf-4767-a34d-
7112b5f64698\s


DATE: 02/02/2021                          TIME: 04:58:01

USER:


COMMENTS: ____________________________________________________________


  ************************************************
  ** SIMULATION : 5 - Year (6hr AES)            **
  ************************************************

  W/E COMMAND             HYD ID   DT    AREA  ' Qpeak Tpeak   R.V. R.C.   Qbase
                                  min     ha   '  cms   hrs     mm          cms

      START @  0.00 hrs
      --------------------
    READ STORM                 15.0
    [ Ptot= 47.81 mm ]
    fname : C:\Users\pchiocchio\AppData\Local\Temp\28e483ab-ebba-4caf-9e59-d34cfb3502df\8473c2e0-bfe2-4798-bce2-
    remark: 5 Year 6 Hour AES (Bloor, TRCA)
*
 ** CALIB NASHYD         0022  1  5.0    1.47    0.11  2.75  21.09 0.44   0.000
    [CN=90.0         ]
    [ N = 3.0:Tp 0.10]
*
    READ STORM                 15.0
    [ Ptot= 47.81 mm ]
    fname : C:\Users\pchiocchio\AppData\Local\Temp\28e483ab-ebba-4caf-9e59-d34cfb3502df\8473c2e0-bfe2-4798-bce2-
    remark: 5 Year 6 Hour AES (Bloor, TRCA)
*
 ** CALIB NASHYD         0023  1  5.0    6.75    0.36  2.83  21.64 0.45   0.000
    [CN=90.0         ]
    [ N = 3.0:Tp 0.26]
*
    READ STORM                 15.0
    [ Ptot= 47.81 mm ]
    fname : C:\Users\pchiocchio\AppData\Local\Temp\28e483ab-ebba-4caf-9e59-d34cfb3502df\8473c2e0-bfe2-4798-bce2-
    remark: 5 Year 6 Hour AES (Bloor, TRCA)
*
 ** CALIB NASHYD         0024  1  5.0    4.86    0.22  3.00  21.64 0.45   0.000
    [CN=90.0         ]
    [ N = 3.0:Tp 0.34]
*
    READ STORM                 15.0
    [ Ptot= 47.81 mm ]
    fname : C:\Users\pchiocchio\AppData\Local\Temp\28e483ab-ebba-4caf-9e59-d34cfb3502df\8473c2e0-bfe2-4798-bce2-
    remark: 5 Year 6 Hour AES (Bloor, TRCA)
*
 ** CALIB NASHYD         0025  1  5.0    5.72    0.33  2.83  21.63 0.45   0.000
    [CN=90.0         ]
    [ N = 3.0:Tp 0.23]
*
    ADD [  0022+  0023]  0026  3  5.0    8.22    0.44  2.83  21.54  n/a   0.000
*
    ADD [  0026+  0024]  0026  1  5.0   13.08    0.64  2.83  21.58  n/a   0.000
*
    ADD [  0026+  0025]  0026  3  5.0   18.80    0.97  2.83  21.59  n/a   0.000
*
    READ STORM                 15.0
    [ Ptot= 47.81 mm ]
    fname : C:\Users\pchiocchio\AppData\Local\Temp\28e483ab-ebba-4caf-9e59-d34cfb3502df\8473c2e0-bfe2-4798-bce2-
    remark: 5 Year 6 Hour AES (Bloor, TRCA)
*
 ** CALIB NASHYD         0028  1  5.0    2.78    0.16  2.83  21.63 0.45   0.000
    [CN=90.0         ]
    [ N = 3.0:Tp 0.23]
```

```
*
    READ STORM                 15.0
    [ Ptot= 47.81 mm ]
    fname : C:\Users\pchiocchio\AppData\Local\Temp\28e483ab-ebba-4caf-9e59-d34cfb3502df\8473c2e0-bfe2-4798-bce2-
    remark: 5 Year 6 Hour AES (Bloor, TRCA)
*
 ** CALIB NASHYD         0029  1  5.0    9.39    0.65  2.75  21.53 0.45   0.000
    [CN=90.0         ]
    [ N = 3.0:Tp 0.15]
*
    READ STORM                 15.0
    [ Ptot= 47.81 mm ]
    fname : C:\Users\pchiocchio\AppData\Local\Temp\28e483ab-ebba-4caf-9e59-d34cfb3502df\8473c2e0-bfe2-4798-bce2-
    remark: 5 Year 6 Hour AES (Bloor, TRCA)
*
 ** CALIB NASHYD         0030  1  5.0    1.69    0.13  2.75  21.09 0.44   0.000
    [CN=90.0         ]
    [ N = 3.0:Tp 0.10]
*
    READ STORM                 15.0
    [ Ptot= 47.81 mm ]
    fname : C:\Users\pchiocchio\AppData\Local\Temp\28e483ab-ebba-4caf-9e59-d34cfb3502df\8473c2e0-bfe2-4798-bce2-
    remark: 5 Year 6 Hour AES (Bloor, TRCA)
*
 ** CALIB NASHYD         0031  1  5.0    2.93    0.21  2.75  21.44 0.45   0.000
    [CN=90.0         ]
    [ N = 3.0:Tp 0.13]
*
    READ STORM                 15.0
    [ Ptot= 47.81 mm ]
    fname : C:\Users\pchiocchio\AppData\Local\Temp\28e483ab-ebba-4caf-9e59-d34cfb3502df\8473c2e0-bfe2-4798-bce2-
    remark: 5 Year 6 Hour AES (Bloor, TRCA)
*
 ** CALIB NASHYD         0032  1  5.0    4.99    0.33  2.75  21.55 0.45   0.000
    [CN=90.0         ]
    [ N = 3.0:Tp 0.16]
*
    ADD [  0029+  0030]  0033  3  5.0   11.08    0.77  2.75  21.46  n/a   0.000
*
    ADD [  0033+  0031]  0033  1  5.0   14.01    0.98  2.75  21.45  n/a   0.000
*
    ADD [  0033+  0032]  0033  3  5.0   19.00    1.32  2.75  21.48  n/a   0.000
*
    READ STORM                 15.0
    [ Ptot= 47.81 mm ]
    fname : C:\Users\pchiocchio\AppData\Local\Temp\28e483ab-ebba-4caf-9e59-d34cfb3502df\8473c2e0-bfe2-4798-bce2-
    remark: 5 Year 6 Hour AES (Bloor, TRCA)
*
 ** CALIB NASHYD         0001  1  5.0    1.24    0.01  4.58  11.67 0.24   0.000
    [CN=75.0         ]
    [ N = 2.5:Tp 1.47]
*
    READ STORM                 15.0
    [ Ptot= 47.81 mm ]
    fname : C:\Users\pchiocchio\AppData\Local\Temp\28e483ab-ebba-4caf-9e59-d34cfb3502df\8473c2e0-bfe2-4798-bce2-
    remark: 5 Year 6 Hour AES (Bloor, TRCA)
*
 ** CALIB NASHYD         0002  1  5.0    1.96    0.01  5.08  11.67 0.24   0.000
    [CN=75.0         ]
    [ N = 2.5:Tp 1.93]
*
    READ STORM                 15.0
    [ Ptot= 47.81 mm ]
    fname : C:\Users\pchiocchio\AppData\Local\Temp\28e483ab-ebba-4caf-9e59-d34cfb3502df\8473c2e0-bfe2-4798-bce2-
    remark: 5 Year 6 Hour AES (Bloor, TRCA)
*
 ** CALIB NASHYD         0004  1  5.0   40.84    0.12  8.33  11.67 0.24   0.000
    [CN=75.0         ]
    [ N = 2.5:Tp 5.06]
*
    ADD [  0001+  0002]  0096  3  5.0    3.20    0.02  4.83  11.67  n/a   0.000
*
    ADD [  0096+  0004]  0096  1  5.0   44.04    0.13  7.67  11.67  n/a   0.000
*
    CHANNEL[ 2:  0096]   0066  1  5.0   44.04    0.12  9.17  11.67  n/a   0.000
*
    READ STORM                 15.0
    [ Ptot= 47.81 mm ]
    fname : C:\Users\pchiocchio\AppData\Local\Temp\28e483ab-ebba-4caf-9e59-d34cfb3502df\8473c2e0-bfe2-4798-bce2-
    remark: 5 Year 6 Hour AES (Bloor, TRCA)
*
 ** CALIB NASHYD         0005  1  5.0   34.73    0.05 13.92  11.67 0.24   0.000
    [CN=75.0         ]
    [ N = 2.5:Tp10.71]
*
    ADD [  0005+  0066]  0003  3  5.0   78.77    0.16  9.83  11.67  n/a   0.000
*
    CHANNEL[ 2:  0003]   0078  1  5.0   78.77    0.16 10.92  11.67  n/a   0.000
*
    READ STORM                 15.0
    [ Ptot= 47.81 mm ]
    fname : C:\Users\pchiocchio\AppData\Local\Temp\28e483ab-ebba-4caf-9e59-d34cfb3502df\8473c2e0-bfe2-4798-bce2-
    remark: 5 Year 6 Hour AES (Bloor, TRCA)
*
 ** CALIB NASHYD         0021  1  5.0    2.77    0.02  4.83  11.67 0.24   0.000
```

```
    [CN=75.0         ]
    [ N = 2.5:Tp 1.68]
*
    READ STORM                 15.0
    [ Ptot= 47.81 mm ]
    fname : C:\Users\pchiocchio\AppData\Local\Temp\28e483ab-ebba-4caf-9e59-d34cfb3502df\8473c2e0-bfe2-4798-bce2-
    remark: 5 Year 6 Hour AES (Bloor, TRCA)
*
 ** CALIB NASHYD         0027  1  5.0   54.23    0.08 13.50  11.67 0.24   0.000
    [CN=75.0         ]
    [ N = 2.5:Tp10.29]
*
    ADD [  0021+  0027]  0079  3  5.0   57.00    0.08 13.33  11.67  n/a   0.000
*
    ADD [  0079+  0078]  0079  1  5.0  135.77    0.23 11.33  11.67  n/a   0.000
*
    CHANNEL[ 2:  0079]   0080  1  5.0  135.77    0.23 11.75  11.67  n/a   0.000
*
    READ STORM                 15.0
    [ Ptot= 47.81 mm ]
    fname : C:\Users\pchiocchio\AppData\Local\Temp\28e483ab-ebba-4caf-9e59-d34cfb3502df\8473c2e0-bfe2-4798-bce2-
    remark: 5 Year 6 Hour AES (Bloor, TRCA)
*
 ** CALIB NASHYD         0020  1  5.0    9.50    0.03  7.25  11.67 0.24   0.000
    [CN=75.0         ]
    [ N = 2.5:Tp 3.98]
*
    ADD [  0020+  0080]  0106  3  5.0  145.27    0.25 11.08  11.67  n/a   0.000
*
    READ STORM                 15.0
    [ Ptot= 47.81 mm ]
    fname : C:\Users\pchiocchio\AppData\Local\Temp\28e483ab-ebba-4caf-9e59-d34cfb3502df\8473c2e0-bfe2-4798-bce2-
    remark: 5 Year 6 Hour AES (Bloor, TRCA)
*
 ** CALIB NASHYD         0019  1  5.0   18.32    0.04  9.42  11.67 0.24   0.000
    [CN=75.0         ]
    [ N = 2.5:Tp 6.17]
*
    ADD [  0106+  0019]  0018  3  5.0  163.59    0.30 10.92  11.67  n/a   0.000
*
    CHANNEL[ 2:  0018]   0081  1  5.0  163.59    0.30 11.00  11.67  n/a   0.000
*
    READ STORM                 15.0
    [ Ptot= 47.81 mm ]
    fname : C:\Users\pchiocchio\AppData\Local\Temp\28e483ab-ebba-4caf-9e59-d34cfb3502df\8473c2e0-bfe2-4798-bce2-
    remark: 5 Year 6 Hour AES (Bloor, TRCA)
*
 ** CALIB NASHYD         0036  1  5.0    6.46    0.04  5.75  11.67 0.24   0.000
    [CN=75.0         ]
    [ N = 2.5:Tp 2.48]
*
    ADD [  0036+  0081]  0035  3  5.0  170.05    0.31 10.58  11.67  n/a   0.000
*
    CHANNEL[ 2:  0035]   0082  1  5.0  170.05    0.31 11.08  11.67  n/a   0.000
*
    READ STORM                 15.0
    [ Ptot= 47.81 mm ]
    fname : C:\Users\pchiocchio\AppData\Local\Temp\28e483ab-ebba-4caf-9e59-d34cfb3502df\8473c2e0-bfe2-4798-bce2-
    remark: 5 Year 6 Hour AES (Bloor, TRCA)
*
 ** CALIB NASHYD         0044  1  5.0   24.38    0.03 13.92  11.67 0.24   0.000
    [CN=75.0         ]
    [ N = 2.5:Tp10.73]
*
    ADD [  0044+  0082]  0056  3  5.0  194.43    0.34 11.25  11.67  n/a   0.000
*
    CHANNEL[ 2:  0056]   0083  1  5.0  194.43    0.34 11.50  11.67  n/a   0.000
*
    READ STORM                 15.0
    [ Ptot= 47.81 mm ]
    fname : C:\Users\pchiocchio\AppData\Local\Temp\28e483ab-ebba-4caf-9e59-d34cfb3502df\8473c2e0-bfe2-4798-bce2-
    remark: 5 Year 6 Hour AES (Bloor, TRCA)
*
 ** CALIB NASHYD         0043  1  5.0   10.09    0.07  5.17  12.11 0.25   0.000
    [CN=76.0         ]
    [ N = 2.5:Tp 2.02]
*
    READ STORM                 15.0
    [ Ptot= 47.81 mm ]
    fname : C:\Users\pchiocchio\AppData\Local\Temp\28e483ab-ebba-4caf-9e59-d34cfb3502df\8473c2e0-bfe2-4798-bce2-
    remark: 5 Year 6 Hour AES (Bloor, TRCA)
*
 ** CALIB NASHYD         0045  1  5.0    5.34    0.05  4.50  12.11 0.25   0.000
    [CN=76.0         ]
    [ N = 2.5:Tp 1.39]
*
    ADD [  0043+  0045]  0086  3  5.0   15.43    0.11  4.83  12.11  n/a   0.000
*
    ADD [  0086+  0083]  0086  1  5.0  209.86    0.34 10.83  11.70  n/a   0.000
*
    CHANNEL[ 2:  0086]   0085  1  5.0  209.86    0.34 11.50  11.70  n/a   0.000
*
    READ STORM                 15.0
    [ Ptot= 47.81 mm ]
    fname : C:\Users\pchiocchio\AppData\Local\Temp\28e483ab-ebba-4caf-9e59-d34cfb3502df\8473c2e0-bfe2-4798-bce2-
```

```
    remark: 5 Year 6 Hour AES (Bloor, TRCA)
*
 ** CALIB NASHYD         0017  1  5.0    7.10    0.03  6.75  11.67 0.24   0.000
    [CN=75.0         ]
    [ N = 2.5:Tp 3.47]
*
    CHANNEL[ 2:  0017]   0084  1  5.0    7.10    0.03  7.75  11.67  n/a   0.000
*
    READ STORM                 15.0
    [ Ptot= 47.81 mm ]
    fname : C:\Users\pchiocchio\AppData\Local\Temp\28e483ab-ebba-4caf-9e59-d34cfb3502df\8473c2e0-bfe2-4798-bce2-
    remark: 5 Year 6 Hour AES (Bloor, TRCA)
*
 ** CALIB NASHYD         0042  1  5.0   33.34    0.16  6.33  12.11 0.25   0.000
    [CN=76.0         ]
    [ N = 2.5:Tp 3.02]
*
    READ STORM                 15.0
    [ Ptot= 47.81 mm ]
    fname : C:\Users\pchiocchio\AppData\Local\Temp\28e483ab-ebba-4caf-9e59-d34cfb3502df\8473c2e0-bfe2-4798-bce2-
    remark: 5 Year 6 Hour AES (Bloor, TRCA)
*
 ** CALIB NASHYD         0046  1  5.0   75.42    0.20  9.00  12.11 0.25   0.000
    [CN=76.0         ]
    [ N = 2.5:Tp 5.71]
*
    ADD [  0042+  0046]  0055  3  5.0  108.76    0.34  7.42  12.11  n/a   0.000
*
    ADD [  0055+  0084]  0055  1  5.0  115.86    0.37  7.42  12.09  n/a   0.000
*
    ADD [  0055+  0085]  0055  3  5.0  325.72    0.66  8.58  11.84  n/a   0.000
*
    CHANNEL[ 2:  0055]   0087  1  5.0  325.72    0.66  8.83  11.84  n/a   0.000
*
    READ STORM                 15.0
    [ Ptot= 47.81 mm ]
    fname : C:\Users\pchiocchio\AppData\Local\Temp\28e483ab-ebba-4caf-9e59-d34cfb3502df\8473c2e0-bfe2-4798-bce2-
    remark: 5 Year 6 Hour AES (Bloor, TRCA)
*
 ** CALIB NASHYD         0006  1  5.0   22.56    0.06  8.33  11.67 0.24   0.000
    [CN=75.0         ]
    [ N = 2.5:Tp 5.09]
*
    CHANNEL[ 2:  0006]   0091  1  5.0   22.56    0.06  8.75  11.67  n/a   0.000
*
    READ STORM                 15.0
    [ Ptot= 47.81 mm ]
    fname : C:\Users\pchiocchio\AppData\Local\Temp\28e483ab-ebba-4caf-9e59-d34cfb3502df\8473c2e0-bfe2-4798-bce2-
    remark: 5 Year 6 Hour AES (Bloor, TRCA)
*
 ** CALIB NASHYD         0008  1  5.0    6.20    0.03  5.83  11.67 0.24   0.000
    [CN=75.0         ]
    [ N = 2.5:Tp 2.54]
*
    ADD [  0008+  0091]  0011  3  5.0   28.76    0.09  7.50  11.67  n/a   0.000
*
    CHANNEL[ 2:  0011]   0092  1  5.0   28.76    0.09  7.50  11.67  n/a   0.000
*
    READ STORM                 15.0
    [ Ptot= 47.81 mm ]
    fname : C:\Users\pchiocchio\AppData\Local\Temp\28e483ab-ebba-4caf-9e59-d34cfb3502df\8473c2e0-bfe2-4798-bce2-
    remark: 5 Year 6 Hour AES (Bloor, TRCA)
*
 ** CALIB NASHYD         0038  1  5.0    7.23    0.03  7.33  11.67 0.24   0.000
    [CN=75.0         ]
    [ N = 2.5:Tp 4.06]
*
    ADD [  0038+  0092]  0052  3  5.0   35.99    0.11  7.50  11.67  n/a   0.000
*
    READ STORM                 15.0
    [ Ptot= 47.81 mm ]
    fname : C:\Users\pchiocchio\AppData\Local\Temp\28e483ab-ebba-4caf-9e59-d34cfb3502df\8473c2e0-bfe2-4798-bce2-
    remark: 5 Year 6 Hour AES (Bloor, TRCA)
*
 ** CALIB NASHYD         0007  1  5.0    1.34    0.01  4.17  11.67 0.24   0.000
    [CN=75.0         ]
    [ N = 2.5:Tp 1.07]
*
    CHANNEL[ 2:  0007]   0089  1  5.0    1.34    0.01  4.50  11.66  n/a   0.000
*
    READ STORM                 15.0
    [ Ptot= 47.81 mm ]
    fname : C:\Users\pchiocchio\AppData\Local\Temp\28e483ab-ebba-4caf-9e59-d34cfb3502df\8473c2e0-bfe2-4798-bce2-
    remark: 5 Year 6 Hour AES (Bloor, TRCA)
*
 ** CALIB NASHYD         0009  1  5.0    5.08    0.02  6.08  11.67 0.24   0.000
    [CN=75.0         ]
    [ N = 2.5:Tp 2.82]
*
    ADD [  0089+  0009]  0010  3  5.0    6.42    0.03  5.25  11.67  n/a   0.000
*
    READ STORM                 15.0
    [ Ptot= 47.81 mm ]
    fname : C:\Users\pchiocchio\AppData\Local\Temp\28e483ab-ebba-4caf-9e59-d34cfb3502df\8473c2e0-bfe2-4798-bce2-
    remark: 5 Year 6 Hour AES (Bloor, TRCA)
```

```
*
 ** CALIB NASHYD         0100  1  5.0   14.67    0.10  4.42   9.09 0.19   0.000
    [CN=68.0         ]
    [ N = 2.5:Tp 1.29]
*
    READ STORM                 15.0
    [ Ptot= 47.81 mm ]
    fname : C:\Users\pchiocchio\AppData\Local\Temp\28e483ab-ebba-4caf-9e59-d34cfb3502df\8473c2e0-bfe2-4798-bce2-
    remark: 5 Year 6 Hour AES (Bloor, TRCA)
*
 ** CALIB NASHYD         0102  1  5.0    0.88    0.01  3.50   9.08 0.19   0.000
    [CN=68.0         ]
    [ N = 2.5:Tp 0.62]
*
    ADD [  0100+  0102]  0107  3  5.0   15.55    0.11  4.33   9.09  n/a   0.000
*
    ADD [  0010+  0107]  0109  3  5.0   21.97    0.14  4.50   9.84  n/a   0.000
*
    CHANNEL[ 2:  0109]   0094  1  5.0   21.97    0.12  5.33   9.84  n/a   0.000
*
    READ STORM                 15.0
    [ Ptot= 47.81 mm ]
    fname : C:\Users\pchiocchio\AppData\Local\Temp\28e483ab-ebba-4caf-9e59-d34cfb3502df\8473c2e0-bfe2-4798-bce2-
    remark: 5 Year 6 Hour AES (Bloor, TRCA)
*
 ** CALIB NASHYD         0037  1  5.0    9.00    0.03  8.33  11.67 0.24   0.000
    [CN=75.0         ]
    [ N = 2.5:Tp 5.09]
*
    ADD [  0037+  0094]  0053  3  5.0   30.97    0.14  5.50  10.37  n/a   0.000
*
    READ STORM                 15.0
    [ Ptot= 47.81 mm ]
    fname : C:\Users\pchiocchio\AppData\Local\Temp\28e483ab-ebba-4caf-9e59-d34cfb3502df\8473c2e0-bfe2-4798-bce2-
    remark: 5 Year 6 Hour AES (Bloor, TRCA)
*
 ** CALIB NASHYD         0013  1  5.0    7.42    0.03  7.00  11.67 0.24   0.000
    [CN=75.0         ]
    [ N = 2.5:Tp 3.66]
*
    READ STORM                 15.0
    [ Ptot= 47.81 mm ]
    fname : C:\Users\pchiocchio\AppData\Local\Temp\28e483ab-ebba-4caf-9e59-d34cfb3502df\8473c2e0-bfe2-4798-bce2-
    remark: 5 Year 6 Hour AES (Bloor, TRCA)
*
 ** CALIB NASHYD         0014  1  5.0    4.74    0.02  5.83  11.67 0.24   0.000
    [CN=75.0         ]
    [ N = 2.5:Tp 2.60]
*
    READ STORM                 15.0
    [ Ptot= 47.81 mm ]
    fname : C:\Users\pchiocchio\AppData\Local\Temp\28e483ab-ebba-4caf-9e59-d34cfb3502df\8473c2e0-bfe2-4798-bce2-
    remark: 5 Year 6 Hour AES (Bloor, TRCA)
*
 ** CALIB NASHYD         0015  1  5.0    7.40    0.03  7.17  11.67 0.24   0.000
    [CN=75.0         ]
    [ N = 2.5:Tp 3.83]
*
    READ STORM                 15.0
    [ Ptot= 47.81 mm ]
    fname : C:\Users\pchiocchio\AppData\Local\Temp\28e483ab-ebba-4caf-9e59-d34cfb3502df\8473c2e0-bfe2-4798-bce2-
    remark: 5 Year 6 Hour AES (Bloor, TRCA)
*
 ** CALIB NASHYD         0105  1  5.0    6.60    0.02  7.17  11.67 0.24   0.000
    [CN=75.0         ]
    [ N = 2.5:Tp 3.83]
*
    ADD [  0105+  0013]  0012  3  5.0   14.02    0.05  7.08  11.67  n/a   0.000
*
    ADD [  0012+  0014]  0012  1  5.0   18.76    0.08  6.58  11.67  n/a   0.000
*
    ADD [  0012+  0015]  0012  3  5.0   26.16    0.10  6.75  11.67  n/a   0.000
*
    CHANNEL[ 2:  0012]   0093  1  5.0   26.16    0.10  7.08  11.67  n/a   0.000
*
    READ STORM                 15.0
    [ Ptot= 47.81 mm ]
    fname : C:\Users\pchiocchio\AppData\Local\Temp\28e483ab-ebba-4caf-9e59-d34cfb3502df\8473c2e0-bfe2-4798-bce2-
    remark: 5 Year 6 Hour AES (Bloor, TRCA)
*
 ** CALIB NASHYD         0039  1  5.0   13.25    0.05  7.33  11.67 0.24   0.000
    [CN=75.0         ]
    [ N = 2.5:Tp 4.05]
*
    ADD [  0039+  0093]  0051  3  5.0   39.41    0.15  7.17  11.67  n/a   0.000
*
    READ STORM                 15.0
    [ Ptot= 47.81 mm ]
    fname : C:\Users\pchiocchio\AppData\Local\Temp\28e483ab-ebba-4caf-9e59-d34cfb3502df\8473c2e0-bfe2-4798-bce2-
    remark: 5 Year 6 Hour AES (Bloor, TRCA)
*
 ** CALIB NASHYD         0040  1  5.0    7.26    0.03  7.00  11.67 0.24   0.000
    [CN=75.0         ]
    [ N = 2.5:Tp 3.69]
*
```

```
    READ STORM                 15.0
    [ Ptot= 47.81 mm ]
    fname : C:\Users\pchiocchio\AppData\Local\Temp\28e483ab-ebba-4caf-9e59-d34cfb3502df\8473c2e0-bfe2-4798-bce2-
    remark: 5 Year 6 Hour AES (Bloor, TRCA)
*
 ** CALIB NASHYD         0108  1  5.0    4.10    0.05  3.50   9.08 0.19   0.000
    [CN=68.0         ]
    [ N = 2.5:Tp 0.62]
*
    CHANNEL[ 2:  0108]   0101  1  5.0    4.10    0.04  3.92   9.08  n/a   0.000
*
    ADD [  0101+  0040]  0090  3  5.0   11.36    0.05  4.17  10.74  n/a   0.000
*
    ADD [  0090+  0051]  0090  1  5.0   50.77    0.18  6.92  11.46  n/a   0.000
*
    ADD [  0090+  0052]  0090  3  5.0   86.76    0.30  7.17  11.55  n/a   0.000
*
    ADD [  0090+  0053]  0090  1  5.0  117.73    0.42  6.50  11.24  n/a   0.000
*
    CHANNEL[ 2:  0090]   0095  1  5.0  117.73    0.42  6.58  11.24  n/a   0.000
*
    READ STORM                 15.0
    [ Ptot= 47.81 mm ]
    fname : C:\Users\pchiocchio\AppData\Local\Temp\28e483ab-ebba-4caf-9e59-d34cfb3502df\8473c2e0-bfe2-4798-bce2-
    remark: 5 Year 6 Hour AES (Bloor, TRCA)
*
 ** CALIB NASHYD         0041  1  5.0   12.70    0.06  6.58  11.67 0.24   0.000
    [CN=75.0         ]
    [ N = 2.5:Tp 3.25]
*
    ADD [  0041+  0095]  0050  3  5.0  130.43    0.47  6.58  11.28  n/a   0.000
*
    READ STORM                 15.0
    [ Ptot= 47.81 mm ]
    fname : C:\Users\pchiocchio\AppData\Local\Temp\28e483ab-ebba-4caf-9e59-d34cfb3502df\8473c2e0-bfe2-4798-bce2-
    remark: 5 Year 6 Hour AES (Bloor, TRCA)
*
 ** CALIB NASHYD         0047  1  5.0   71.95    0.21  8.33  12.11 0.25   0.000
    [CN=76.0         ]
    [ N = 2.5:Tp 5.10]
*
    ADD [  0047+  0050]  0054  3  5.0  202.38    0.67  7.08  11.58  n/a   0.000
*
    ADD [  0054+  0087]  0054  1  5.0  528.10    1.30  7.75  11.74  n/a   0.000
*
    CHANNEL[ 2:  0054]   0088  1  5.0  528.10    1.30  7.92  11.74  n/a   0.000
*
    READ STORM                 15.0
    [ Ptot= 47.81 mm ]
    fname : C:\Users\pchiocchio\AppData\Local\Temp\28e483ab-ebba-4caf-9e59-d34cfb3502df\8473c2e0-bfe2-4798-bce2-
    remark: 5 Year 6 Hour AES (Bloor, TRCA)
*
 ** CALIB NASHYD         0048  1  5.0   34.24    0.22  5.00  10.47 0.22   0.000
    [CN=72.0         ]
    [ N = 2.5:Tp 1.82]
*
    ADD [  0048+  0088]  0049  3  5.0  562.34    1.41  7.33  11.66  n/a   0.000
*
```

```
==========================================================================================

       V    V   I    SSSSS  U   U    A    L              (v 6.2.2001)
       V    V   I    SS     U   U   A A   L
        V  V    I     SS    U   U  AAAAA  L
        V  V    I      SS   U   U  A   A  L
         VV     I    SSSSS  UUUUU  A   A  LLLLL

        OOO   TTTTT  TTTTT  H   H  Y   Y  M   M   OOO    TM
       O   O    T      T    H   H   Y Y   MM MM  O   O
       O   O    T      T    H   H    Y    M   M  O   O
        OOO     T      T    H   H    Y    M   M   OOO
Developed and Distributed by Smart City Water Inc
Copyright 2007 - 2020 Smart City Water Inc
All rights reserved.


                  *****  S U M M A R Y   O U T P U T  *****


  Input   filename: C:\Program Files (x86)\Visual OTTHYMO 6.2\VO2\voin.dat
  Output  filename: C:\Users\pchiocchio\AppData\Local\Civica\VH5\d59fad6f-510d-48b8-a35a-1bee91f156cc\99550a92-f80f-47a8-8f8b-
1915fc9e8537\s
  Summary filename: C:\Users\pchiocchio\AppData\Local\Civica\VH5\d59fad6f-510d-48b8-a35a-1bee91f156cc\99550a92-f80f-47a8-8f8b-
1915fc9e8537\s


DATE: 02/02/2021                          TIME: 04:57:59

USER:


COMMENTS: ____________________________________________________________


  ************************************************
  ** SIMULATION : 5 - Year (12hr AES)           **
  ************************************************

  W/E COMMAND             HYD ID   DT    AREA  ' Qpeak Tpeak   R.V. R.C.   Qbase
                                  min     ha   '  cms   hrs     mm          cms

      START @  0.00 hrs
      --------------------
    READ STORM                 15.0
    [ Ptot= 54.38 mm ]
    fname : C:\Users\pchiocchio\AppData\Local\Temp\28e483ab-ebba-4caf-9e59-d34cfb3502df\592e14ab-eed9-4d91-8e8e-
    remark: 5 Year 12 Hour AES (Bloor, TRCA)
*
 ** CALIB NASHYD         0022  1  5.0    1.47    0.07  5.25  26.42 0.49   0.000
    [CN=90.0         ]
    [ N = 3.0:Tp 0.10]
*
    READ STORM                 15.0
    [ Ptot= 54.38 mm ]
    fname : C:\Users\pchiocchio\AppData\Local\Temp\28e483ab-ebba-4caf-9e59-d34cfb3502df\592e14ab-eed9-4d91-8e8e-
    remark: 5 Year 12 Hour AES (Bloor, TRCA)
*
 ** CALIB NASHYD         0023  1  5.0    6.75    0.30  5.25  27.11 0.50   0.000
    [CN=90.0         ]
    [ N = 3.0:Tp 0.26]
*
    READ STORM                 15.0
    [ Ptot= 54.38 mm ]
    fname : C:\Users\pchiocchio\AppData\Local\Temp\28e483ab-ebba-4caf-9e59-d34cfb3502df\592e14ab-eed9-4d91-8e8e-
    remark: 5 Year 12 Hour AES (Bloor, TRCA)
*
 ** CALIB NASHYD         0024  1  5.0    4.86    0.20  5.33  27.12 0.50   0.000
    [CN=90.0         ]
    [ N = 3.0:Tp 0.34]
*
    READ STORM                 15.0
    [ Ptot= 54.38 mm ]
    fname : C:\Users\pchiocchio\AppData\Local\Temp\28e483ab-ebba-4caf-9e59-d34cfb3502df\592e14ab-eed9-4d91-8e8e-
    remark: 5 Year 12 Hour AES (Bloor, TRCA)
*
 ** CALIB NASHYD         0025  1  5.0    5.72    0.26  5.25  27.10 0.50   0.000
    [CN=90.0         ]
    [ N = 3.0:Tp 0.23]
*
    ADD [  0022+  0023]  0026  3  5.0    8.22    0.37  5.25  26.99  n/a   0.000
*
    ADD [  0026+  0024]  0026  1  5.0   13.08    0.57  5.25  27.04  n/a   0.000
*
    ADD [  0026+  0025]  0026  3  5.0   18.80    0.83  5.25  27.06  n/a   0.000
*
    READ STORM                 15.0
    [ Ptot= 54.38 mm ]
    fname : C:\Users\pchiocchio\AppData\Local\Temp\28e483ab-ebba-4caf-9e59-d34cfb3502df\592e14ab-eed9-4d91-8e8e-
    remark: 5 Year 12 Hour AES (Bloor, TRCA)
*
 ** CALIB NASHYD         0028  1  5.0    2.78    0.13  5.25  27.10 0.50   0.000
    [CN=90.0         ]
    [ N = 3.0:Tp 0.23]
```

```
*
    READ STORM                 15.0
    [ Ptot= 54.38 mm ]
    fname : C:\Users\pchiocchio\AppData\Local\Temp\28e483ab-ebba-4caf-9e59-d34cfb3502df\592e14ab-eed9-4d91-8e8e-
    remark: 5 Year 12 Hour AES (Bloor, TRCA)
*
 ** CALIB NASHYD         0029  1  5.0    9.39    0.46  5.25  26.97 0.50   0.000
    [CN=90.0         ]
    [ N = 3.0:Tp 0.15]
*
    READ STORM                 15.0
    [ Ptot= 54.38 mm ]
    fname : C:\Users\pchiocchio\AppData\Local\Temp\28e483ab-ebba-4caf-9e59-d34cfb3502df\592e14ab-eed9-4d91-8e8e-
    remark: 5 Year 12 Hour AES (Bloor, TRCA)
*
 ** CALIB NASHYD         0030  1  5.0    1.69    0.08  5.25  26.42 0.49   0.000
    [CN=90.0         ]
    [ N = 3.0:Tp 0.10]
*
    READ STORM                 15.0
    [ Ptot= 54.38 mm ]
    fname : C:\Users\pchiocchio\AppData\Local\Temp\28e483ab-ebba-4caf-9e59-d34cfb3502df\592e14ab-eed9-4d91-8e8e-
    remark: 5 Year 12 Hour AES (Bloor, TRCA)
*
 ** CALIB NASHYD         0031  1  5.0    2.93    0.14  5.25  26.86 0.49   0.000
    [CN=90.0         ]
    [ N = 3.0:Tp 0.13]
*
    READ STORM                 15.0
    [ Ptot= 54.38 mm ]
    fname : C:\Users\pchiocchio\AppData\Local\Temp\28e483ab-ebba-4caf-9e59-d34cfb3502df\592e14ab-eed9-4d91-8e8e-
    remark: 5 Year 12 Hour AES (Bloor, TRCA)
*
 ** CALIB NASHYD         0032  1  5.0    4.99    0.24  5.25  27.01 0.50   0.000
    [CN=90.0         ]
    [ N = 3.0:Tp 0.16]
*
    ADD [  0029+  0030]  0033  3  5.0   11.08    0.54  5.25  26.89  n/a   0.000
*
    ADD [  0033+  0031]  0033  1  5.0   14.01    0.68  5.25  26.88  n/a   0.000
*
    ADD [  0033+  0032]  0033  3  5.0   19.00    0.92  5.25  26.91  n/a   0.000
*
    READ STORM                 15.0
    [ Ptot= 54.38 mm ]
    fname : C:\Users\pchiocchio\AppData\Local\Temp\28e483ab-ebba-4caf-9e59-d34cfb3502df\592e14ab-eed9-4d91-8e8e-
    remark: 5 Year 12 Hour AES (Bloor, TRCA)
*
 ** CALIB NASHYD         0001  1  5.0    1.24    0.01  7.08  15.26 0.28   0.000
    [CN=75.0         ]
    [ N = 2.5:Tp 1.47]
*
    READ STORM                 15.0
    [ Ptot= 54.38 mm ]
    fname : C:\Users\pchiocchio\AppData\Local\Temp\28e483ab-ebba-4caf-9e59-d34cfb3502df\592e14ab-eed9-4d91-8e8e-
    remark: 5 Year 12 Hour AES (Bloor, TRCA)
*
 ** CALIB NASHYD         0002  1  5.0    1.96    0.01  7.67  15.26 0.28   0.000
    [CN=75.0         ]
    [ N = 2.5:Tp 1.93]
*
    READ STORM                 15.0
    [ Ptot= 54.38 mm ]
    fname : C:\Users\pchiocchio\AppData\Local\Temp\28e483ab-ebba-4caf-9e59-d34cfb3502df\592e14ab-eed9-4d91-8e8e-
    remark: 5 Year 12 Hour AES (Bloor, TRCA)
*
 ** CALIB NASHYD         0004  1  5.0   40.84    0.14 11.25  15.26 0.28   0.000
    [CN=75.0         ]
    [ N = 2.5:Tp 5.06]
*
    ADD [  0001+  0002]  0096  3  5.0    3.20    0.03  7.42  15.26  n/a   0.000
*
    ADD [  0096+  0004]  0096  1  5.0   44.04    0.15 10.67  15.26  n/a   0.000
*
    CHANNEL[ 2:  0096]   0066  1  5.0   44.04    0.15 12.08  15.26  n/a   0.000
*
    READ STORM                 15.0
    [ Ptot= 54.38 mm ]
    fname : C:\Users\pchiocchio\AppData\Local\Temp\28e483ab-ebba-4caf-9e59-d34cfb3502df\592e14ab-eed9-4d91-8e8e-
    remark: 5 Year 12 Hour AES (Bloor, TRCA)
*
 ** CALIB NASHYD         0005  1  5.0   34.73    0.06 16.92  15.25 0.28   0.000
    [CN=75.0         ]
    [ N = 2.5:Tp10.71]
*
    ADD [  0005+  0066]  0003  3  5.0   78.77    0.20 12.92  15.26  n/a   0.000
*
    CHANNEL[ 2:  0003]   0078  1  5.0   78.77    0.20 13.92  15.26  n/a   0.000
*
    READ STORM                 15.0
    [ Ptot= 54.38 mm ]
    fname : C:\Users\pchiocchio\AppData\Local\Temp\28e483ab-ebba-4caf-9e59-d34cfb3502df\592e14ab-eed9-4d91-8e8e-
    remark: 5 Year 12 Hour AES (Bloor, TRCA)
*
 ** CALIB NASHYD         0021  1  5.0    2.77    0.02  7.42  15.26 0.28   0.000
```

```
    [CN=75.0         ]
    [ N = 2.5:Tp 1.68]
*
    READ STORM                 15.0
    [ Ptot= 54.38 mm ]
    fname : C:\Users\pchiocchio\AppData\Local\Temp\28e483ab-ebba-4caf-9e59-d34cfb3502df\592e14ab-eed9-4d91-8e8e-
    remark: 5 Year 12 Hour AES (Bloor, TRCA)
*
 ** CALIB NASHYD         0027  1  5.0   54.23    0.10 16.58  15.26 0.28   0.000
    [CN=75.0         ]
    [ N = 2.5:Tp10.29]
*
    ADD [  0021+  0027]  0079  3  5.0   57.00    0.10 16.25  15.26  n/a   0.000
*
    ADD [  0079+  0078]  0079  1  5.0  135.77    0.30 14.42  15.26  n/a   0.000
*
    CHANNEL[ 2:  0079]   0080  1  5.0  135.77    0.30 14.75  15.26  n/a   0.000
*
    READ STORM                 15.0
    [ Ptot= 54.38 mm ]
    fname : C:\Users\pchiocchio\AppData\Local\Temp\28e483ab-ebba-4caf-9e59-d34cfb3502df\592e14ab-eed9-4d91-8e8e-
    remark: 5 Year 12 Hour AES (Bloor, TRCA)
*
 ** CALIB NASHYD         0020  1  5.0    9.50    0.04 10.08  15.26 0.28   0.000
    [CN=75.0         ]
    [ N = 2.5:Tp 3.98]
*
    ADD [  0020+  0080]  0106  3  5.0  145.27    0.32 14.17  15.26  n/a   0.000
*
    READ STORM                 15.0
    [ Ptot= 54.38 mm ]
    fname : C:\Users\pchiocchio\AppData\Local\Temp\28e483ab-ebba-4caf-9e59-d34cfb3502df\592e14ab-eed9-4d91-8e8e-
    remark: 5 Year 12 Hour AES (Bloor, TRCA)
*
 ** CALIB NASHYD         0019  1  5.0   18.32    0.05 12.50  15.26 0.28   0.000
    [CN=75.0         ]
    [ N = 2.5:Tp 6.17]
*
    ADD [  0106+  0019]  0018  3  5.0  163.59    0.38 13.83  15.26  n/a   0.000
*
    CHANNEL[ 2:  0018]   0081  1  5.0  163.59    0.38 14.08  15.26  n/a   0.000
*
    READ STORM                 15.0
    [ Ptot= 54.38 mm ]
    fname : C:\Users\pchiocchio\AppData\Local\Temp\28e483ab-ebba-4caf-9e59-d34cfb3502df\592e14ab-eed9-4d91-8e8e-
    remark: 5 Year 12 Hour AES (Bloor, TRCA)
*
 ** CALIB NASHYD         0036  1  5.0    6.46    0.04  8.42  15.26 0.28   0.000
    [CN=75.0         ]
    [ N = 2.5:Tp 2.48]
*
    ADD [  0036+  0081]  0035  3  5.0  170.05    0.39 13.67  15.26  n/a   0.000
*
    CHANNEL[ 2:  0035]   0082  1  5.0  170.05    0.39 14.17  15.26  n/a   0.000
*
    READ STORM                 15.0
    [ Ptot= 54.38 mm ]
    fname : C:\Users\pchiocchio\AppData\Local\Temp\28e483ab-ebba-4caf-9e59-d34cfb3502df\592e14ab-eed9-4d91-8e8e-
    remark: 5 Year 12 Hour AES (Bloor, TRCA)
*
 ** CALIB NASHYD         0044  1  5.0   24.38    0.04 17.00  15.25 0.28   0.000
    [CN=75.0         ]
    [ N = 2.5:Tp10.73]
*
    ADD [  0044+  0082]  0056  3  5.0  194.43    0.43 14.33  15.26  n/a   0.000
*
    CHANNEL[ 2:  0056]   0083  1  5.0  194.43    0.43 14.50  15.26  n/a   0.000
*
    READ STORM                 15.0
    [ Ptot= 54.38 mm ]
    fname : C:\Users\pchiocchio\AppData\Local\Temp\28e483ab-ebba-4caf-9e59-d34cfb3502df\592e14ab-eed9-4d91-8e8e-
    remark: 5 Year 12 Hour AES (Bloor, TRCA)
*
 ** CALIB NASHYD         0043  1  5.0   10.09    0.07  7.83  15.81 0.29   0.000
    [CN=76.0         ]
    [ N = 2.5:Tp 2.02]
*
    READ STORM                 15.0
    [ Ptot= 54.38 mm ]
    fname : C:\Users\pchiocchio\AppData\Local\Temp\28e483ab-ebba-4caf-9e59-d34cfb3502df\592e14ab-eed9-4d91-8e8e-
    remark: 5 Year 12 Hour AES (Bloor, TRCA)
*
 ** CALIB NASHYD         0045  1  5.0    5.34    0.05  6.92  15.81 0.29   0.000
    [CN=76.0         ]
    [ N = 2.5:Tp 1.39]
*
    ADD [  0043+  0045]  0086  3  5.0   15.43    0.12  7.42  15.81  n/a   0.000
*
    ADD [  0086+  0083]  0086  1  5.0  209.86    0.44 13.67  15.30  n/a   0.000
*
    CHANNEL[ 2:  0086]   0085  1  5.0  209.86    0.44 14.00  15.30  n/a   0.000
*
    READ STORM                 15.0
    [ Ptot= 54.38 mm ]
    fname : C:\Users\pchiocchio\AppData\Local\Temp\28e483ab-ebba-4caf-9e59-d34cfb3502df\592e14ab-eed9-4d91-8e8e-
```

```
    remark: 5 Year 12 Hour AES (Bloor, TRCA)
*
 ** CALIB NASHYD         0017  1  5.0    7.10    0.03  9.50  15.26 0.28   0.000
    [CN=75.0         ]
    [ N = 2.5:Tp 3.47]
*
    CHANNEL[ 2:  0017]   0084  1  5.0    7.10    0.03 10.50  15.26  n/a   0.000
*
    READ STORM                 15.0
    [ Ptot= 54.38 mm ]
    fname : C:\Users\pchiocchio\AppData\Local\Temp\28e483ab-ebba-4caf-9e59-d34cfb3502df\592e14ab-eed9-4d91-8e8e-
    remark: 5 Year 12 Hour AES (Bloor, TRCA)
*
 ** CALIB NASHYD         0042  1  5.0   33.34    0.19  9.00  15.81 0.29   0.000
    [CN=76.0         ]
    [ N = 2.5:Tp 3.02]
*
    READ STORM                 15.0
    [ Ptot= 54.38 mm ]
    fname : C:\Users\pchiocchio\AppData\Local\Temp\28e483ab-ebba-4caf-9e59-d34cfb3502df\592e14ab-eed9-4d91-8e8e-
    remark: 5 Year 12 Hour AES (Bloor, TRCA)
*
 ** CALIB NASHYD         0046  1  5.0   75.42    0.25 12.00  15.81 0.29   0.000
    [CN=76.0         ]
    [ N = 2.5:Tp 5.71]
*
    ADD [  0042+  0046]  0055  3  5.0  108.76    0.41 10.25  15.81  n/a   0.000
*
    ADD [  0055+  0084]  0055  1  5.0  115.86    0.44 10.33  15.77  n/a   0.000
*
    ADD [  0055+  0085]  0055  3  5.0  325.72    0.83 11.92  15.47  n/a   0.000
*
    CHANNEL[ 2:  0055]   0087  1  5.0  325.72    0.83 12.17  15.47  n/a   0.000
*
    READ STORM                 15.0
    [ Ptot= 54.38 mm ]
    fname : C:\Users\pchiocchio\AppData\Local\Temp\28e483ab-ebba-4caf-9e59-d34cfb3502df\592e14ab-eed9-4d91-8e8e-
    remark: 5 Year 12 Hour AES (Bloor, TRCA)
*
 ** CALIB NASHYD         0006  1  5.0   22.56    0.08 11.33  15.26 0.28   0.000
    [CN=75.0         ]
    [ N = 2.5:Tp 5.09]
*
    CHANNEL[ 2:  0006]   0091  1  5.0   22.56    0.08 11.67  15.26  n/a   0.000
*
    READ STORM                 15.0
    [ Ptot= 54.38 mm ]
    fname : C:\Users\pchiocchio\AppData\Local\Temp\28e483ab-ebba-4caf-9e59-d34cfb3502df\592e14ab-eed9-4d91-8e8e-
    remark: 5 Year 12 Hour AES (Bloor, TRCA)
*
 ** CALIB NASHYD         0008  1  5.0    6.20    0.04  8.50  15.26 0.28   0.000
    [CN=75.0         ]
    [ N = 2.5:Tp 2.54]
*
    ADD [  0008+  0091]  0011  3  5.0   28.76    0.11 10.33  15.26  n/a   0.000
*
    CHANNEL[ 2:  0011]   0092  1  5.0   28.76    0.11 10.67  15.26  n/a   0.000
*
    READ STORM                 15.0
    [ Ptot= 54.38 mm ]
    fname : C:\Users\pchiocchio\AppData\Local\Temp\28e483ab-ebba-4caf-9e59-d34cfb3502df\592e14ab-eed9-4d91-8e8e-
    remark: 5 Year 12 Hour AES (Bloor, TRCA)
*
 ** CALIB NASHYD         0038  1  5.0    7.23    0.03 10.17  15.26 0.28   0.000
    [CN=75.0         ]
    [ N = 2.5:Tp 4.06]
*
    ADD [  0038+  0092]  0052  3  5.0   35.99    0.14 10.50  15.26  n/a   0.000
*
    READ STORM                 15.0
    [ Ptot= 54.38 mm ]
    fname : C:\Users\pchiocchio\AppData\Local\Temp\28e483ab-ebba-4caf-9e59-d34cfb3502df\592e14ab-eed9-4d91-8e8e-
    remark: 5 Year 12 Hour AES (Bloor, TRCA)
*
 ** CALIB NASHYD         0007  1  5.0    1.34    0.01  6.50  15.26 0.28   0.000
    [CN=75.0         ]
    [ N = 2.5:Tp 1.07]
*
    CHANNEL[ 2:  0007]   0089  1  5.0    1.34    0.01  6.83  15.25  n/a   0.000
*
    READ STORM                 15.0
    [ Ptot= 54.38 mm ]
    fname : C:\Users\pchiocchio\AppData\Local\Temp\28e483ab-ebba-4caf-9e59-d34cfb3502df\592e14ab-eed9-4d91-8e8e-
    remark: 5 Year 12 Hour AES (Bloor, TRCA)
*
 ** CALIB NASHYD         0009  1  5.0    5.08    0.03  8.83  15.26 0.28   0.000
    [CN=75.0         ]
    [ N = 2.5:Tp 2.82]
*
    ADD [  0089+  0009]  0010  3  5.0    6.42    0.04  7.92  15.26  n/a   0.000
*
    READ STORM                 15.0
    [ Ptot= 54.38 mm ]
    fname : C:\Users\pchiocchio\AppData\Local\Temp\28e483ab-ebba-4caf-9e59-d34cfb3502df\592e14ab-eed9-4d91-8e8e-
    remark: 5 Year 12 Hour AES (Bloor, TRCA)
```

```
*
 ** CALIB NASHYD         0100  1  5.0   14.67    0.11  6.83  12.02 0.22   0.000
    [CN=68.0         ]
    [ N = 2.5:Tp 1.29]
*
    READ STORM                 15.0
    [ Ptot= 54.38 mm ]
    fname : C:\Users\pchiocchio\AppData\Local\Temp\28e483ab-ebba-4caf-9e59-d34cfb3502df\592e14ab-eed9-4d91-8e8e-
    remark: 5 Year 12 Hour AES (Bloor, TRCA)
*
 ** CALIB NASHYD         0102  1  5.0    0.88    0.01  5.75  12.01 0.22   0.000
    [CN=68.0         ]
    [ N = 2.5:Tp 0.62]
*
    ADD [  0100+  0102]  0107  3  5.0   15.55    0.12  6.75  12.02  n/a   0.000
*
    ADD [  0010+  0107]  0109  3  5.0   21.97    0.15  6.92  12.96  n/a   0.000
*
    CHANNEL[ 2:  0109]   0094  1  5.0   21.97    0.13  7.92  12.96  n/a   0.000
*
    READ STORM                 15.0
    [ Ptot= 54.38 mm ]
    fname : C:\Users\pchiocchio\AppData\Local\Temp\28e483ab-ebba-4caf-9e59-d34cfb3502df\592e14ab-eed9-4d91-8e8e-
    remark: 5 Year 12 Hour AES (Bloor, TRCA)
*
 ** CALIB NASHYD         0037  1  5.0    9.00    0.03 11.33  15.26 0.28   0.000
    [CN=75.0         ]
    [ N = 2.5:Tp 5.09]
*
    ADD [  0037+  0094]  0053  3  5.0   30.97    0.16  8.17  13.63  n/a   0.000
*
    READ STORM                 15.0
    [ Ptot= 54.38 mm ]
    fname : C:\Users\pchiocchio\AppData\Local\Temp\28e483ab-ebba-4caf-9e59-d34cfb3502df\592e14ab-eed9-4d91-8e8e-
    remark: 5 Year 12 Hour AES (Bloor, TRCA)
*
 ** CALIB NASHYD         0013  1  5.0    7.42    0.03  9.75  15.26 0.28   0.000
    [CN=75.0         ]
    [ N = 2.5:Tp 3.66]
*
    READ STORM                 15.0
    [ Ptot= 54.38 mm ]
    fname : C:\Users\pchiocchio\AppData\Local\Temp\28e483ab-ebba-4caf-9e59-d34cfb3502df\592e14ab-eed9-4d91-8e8e-
    remark: 5 Year 12 Hour AES (Bloor, TRCA)
*
 ** CALIB NASHYD         0014  1  5.0    4.74    0.03  8.58  15.26 0.28   0.000
    [CN=75.0         ]
    [ N = 2.5:Tp 2.60]
*
    READ STORM                 15.0
    [ Ptot= 54.38 mm ]
    fname : C:\Users\pchiocchio\AppData\Local\Temp\28e483ab-ebba-4caf-9e59-d34cfb3502df\592e14ab-eed9-4d91-8e8e-
    remark: 5 Year 12 Hour AES (Bloor, TRCA)
*
 ** CALIB NASHYD         0015  1  5.0    7.40    0.03  9.92  15.26 0.28   0.000
    [CN=75.0         ]
    [ N = 2.5:Tp 3.83]
*
    READ STORM                 15.0
    [ Ptot= 54.38 mm ]
    fname : C:\Users\pchiocchio\AppData\Local\Temp\28e483ab-ebba-4caf-9e59-d34cfb3502df\592e14ab-eed9-4d91-8e8e-
    remark: 5 Year 12 Hour AES (Bloor, TRCA)
*
 ** CALIB NASHYD         0105  1  5.0    6.60    0.03  9.92  15.26 0.28   0.000
    [CN=75.0         ]
    [ N = 2.5:Tp 3.83]
*
    ADD [  0105+  0013]  0012  3  5.0   14.02    0.06  9.83  15.26  n/a   0.000
*
    ADD [  0012+  0014]  0012  1  5.0   18.76    0.09  9.33  15.26  n/a   0.000
*
    ADD [  0012+  0015]  0012  3  5.0   26.16    0.12  9.50  15.26  n/a   0.000
*
    CHANNEL[ 2:  0012]   0093  1  5.0   26.16    0.12  9.83  15.26  n/a   0.000
*
    READ STORM                 15.0
    [ Ptot= 54.38 mm ]
    fname : C:\Users\pchiocchio\AppData\Local\Temp\28e483ab-ebba-4caf-9e59-d34cfb3502df\592e14ab-eed9-4d91-8e8e-
    remark: 5 Year 12 Hour AES (Bloor, TRCA)
*
 ** CALIB NASHYD         0039  1  5.0   13.25    0.06 10.17  15.26 0.28   0.000
    [CN=75.0         ]
    [ N = 2.5:Tp 4.05]
*
    ADD [  0039+  0093]  0051  3  5.0   39.41    0.18  9.92  15.26  n/a   0.000
*
    READ STORM                 15.0
    [ Ptot= 54.38 mm ]
    fname : C:\Users\pchiocchio\AppData\Local\Temp\28e483ab-ebba-4caf-9e59-d34cfb3502df\592e14ab-eed9-4d91-8e8e-
    remark: 5 Year 12 Hour AES (Bloor, TRCA)
*
 ** CALIB NASHYD         0040  1  5.0    7.26    0.03  9.75  15.26 0.28   0.000
    [CN=75.0         ]
    [ N = 2.5:Tp 3.69]
*
```

```
    READ STORM                 15.0
    [ Ptot= 54.38 mm ]
    fname : C:\Users\pchiocchio\AppData\Local\Temp\28e483ab-ebba-4caf-9e59-d34cfb3502df\592e14ab-eed9-4d91-8e8e-
    remark: 5 Year 12 Hour AES (Bloor, TRCA)
*
 ** CALIB NASHYD         0108  1  5.0    4.10    0.05  5.75  12.01 0.22   0.000
    [CN=68.0         ]
    [ N = 2.5:Tp 0.62]
*
    CHANNEL[ 2:  0108]   0101  1  5.0    4.10    0.04  6.17  12.01  n/a   0.000
*
    ADD [  0101+  0040]  0090  3  5.0   11.36    0.06  6.58  14.09  n/a   0.000
*
    ADD [  0090+  0051]  0090  1  5.0   50.77    0.22  9.58  15.00  n/a   0.000
*
    ADD [  0090+  0052]  0090  3  5.0   86.76    0.35  9.92  15.11  n/a   0.000
*
    ADD [  0090+  0053]  0090  1  5.0  117.73    0.49  9.25  14.72  n/a   0.000
*
    CHANNEL[ 2:  0090]   0095  1  5.0  117.73    0.49  9.42  14.72  n/a   0.000
*
    READ STORM                 15.0
    [ Ptot= 54.38 mm ]
    fname : C:\Users\pchiocchio\AppData\Local\Temp\28e483ab-ebba-4caf-9e59-d34cfb3502df\592e14ab-eed9-4d91-8e8e-
    remark: 5 Year 12 Hour AES (Bloor, TRCA)
*
 ** CALIB NASHYD         0041  1  5.0   12.70    0.06  9.33  15.26 0.28   0.000
    [CN=75.0         ]
    [ N = 2.5:Tp 3.25]
*
    ADD [  0041+  0095]  0050  3  5.0  130.43    0.56  9.33  14.77  n/a   0.000
*
    READ STORM                 15.0
    [ Ptot= 54.38 mm ]
    fname : C:\Users\pchiocchio\AppData\Local\Temp\28e483ab-ebba-4caf-9e59-d34cfb3502df\592e14ab-eed9-4d91-8e8e-
    remark: 5 Year 12 Hour AES (Bloor, TRCA)
*
 ** CALIB NASHYD         0047  1  5.0   71.95    0.26 11.33  15.81 0.29   0.000
    [CN=76.0         ]
    [ N = 2.5:Tp 5.10]
*
    ADD [  0047+  0050]  0054  3  5.0  202.38    0.80  9.92  15.14  n/a   0.000
*
    ADD [  0054+  0087]  0054  1  5.0  528.10    1.58 10.83  15.34  n/a   0.000
*
    CHANNEL[ 2:  0054]   0088  1  5.0  528.10    1.58 10.92  15.34  n/a   0.000
*
    READ STORM                 15.0
    [ Ptot= 54.38 mm ]
    fname : C:\Users\pchiocchio\AppData\Local\Temp\28e483ab-ebba-4caf-9e59-d34cfb3502df\592e14ab-eed9-4d91-8e8e-
    remark: 5 Year 12 Hour AES (Bloor, TRCA)
*
 ** CALIB NASHYD         0048  1  5.0   34.24    0.24  7.58  13.76 0.25   0.000
    [CN=72.0         ]
    [ N = 2.5:Tp 1.82]
*
    ADD [  0048+  0088]  0049  3  5.0  562.34    1.71 10.42  15.25  n/a   0.000
*
```

Macville Secondary Plan – Town of Caledon, Region of Peel
Visual OTTHYMO Hydrologic Model Schematic, January 2021, for 1st Submission
Scenario: 10- to 100-Year Storm, EXISTING
(Results for 100-Year storm with 6-hour AES distribution shown in Schematic)

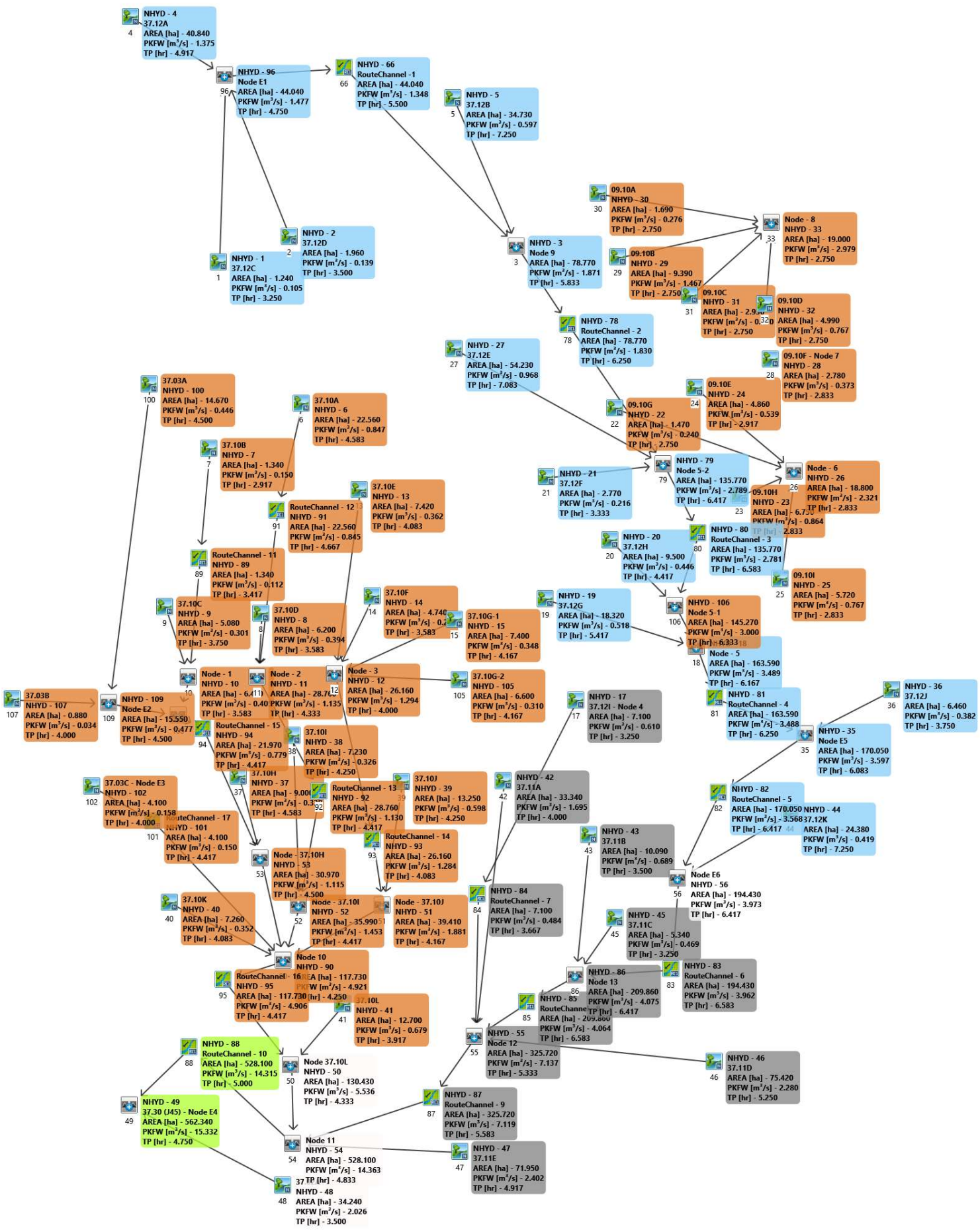

```
==========================================================================================

       V    V   I    SSSSS  U   U    A    L              (v 6.2.2001)
       V    V   I    SS     U   U   A A   L
        V  V    I     SS    U   U  AAAAA  L
        V  V    I      SS   U   U  A   A  L
         VV     I    SSSSS  UUUUU  A   A  LLLLL

        OOO   TTTTT  TTTTT  H   H  Y   Y  M   M   OOO    TM
       O   O    T      T    H   H   Y Y   MM MM  O   O
       O   O    T      T    H   H    Y    M   M  O   O
        OOO     T      T    H   H    Y    M   M   OOO
Developed and Distributed by Smart City Water Inc
Copyright 2007 - 2020 Smart City Water Inc
All rights reserved.


                  *****  S U M M A R Y   O U T P U T  *****


  Input   filename: C:\Program Files (x86)\Visual OTTHYMO 6.2\VO2\voin.dat
  Output  filename: C:\Users\pchiocchio\AppData\Local\Civica\VH5\d59fad6f-510d-48b8-a35a-1bee91f156cc\0431c81f-1383-40ec-a607-
b5af4bd488dc\s
  Summary filename: C:\Users\pchiocchio\AppData\Local\Civica\VH5\d59fad6f-510d-48b8-a35a-1bee91f156cc\0431c81f-1383-40ec-a607-
b5af4bd488dc\s


DATE: 02/02/2021                          TIME: 05:09:07

USER:


COMMENTS: ____________________________________________________________


  ************************************************
  ** SIMULATION : 10 - Year (6hr AES)           **
  ************************************************

  W/E COMMAND             HYD ID   DT    AREA  ' Qpeak Tpeak   R.V. R.C.   Qbase
                                  min     ha   '  cms   hrs     mm          cms

      START @  0.00 hrs
      --------------------
    READ STORM                 15.0
    [ Ptot= 55.69 mm ]
    fname : C:\Users\pchiocchio\AppData\Local\Temp\425a9a70-92a1-415b-a3e1-ac09acf5d6f2\c578a8f4-221c-4c52-bf4c-
    remark: 10 Year 6 Hour AES (Bloor, TRCA)
*
 ** CALIB NASHYD         0022  1  5.0    1.47    0.14  2.75  27.51 0.49   0.000
    [CN=90.0         ]
    [ N = 3.0:Tp 0.10]
*
    READ STORM                 15.0
    [ Ptot= 55.69 mm ]
    fname : C:\Users\pchiocchio\AppData\Local\Temp\425a9a70-92a1-415b-a3e1-ac09acf5d6f2\c578a8f4-221c-4c52-bf4c-
    remark: 10 Year 6 Hour AES (Bloor, TRCA)
*
 ** CALIB NASHYD         0023  1  5.0    6.75    0.48  2.83  28.22 0.51   0.000
    [CN=90.0         ]
    [ N = 3.0:Tp 0.26]
*
    READ STORM                 15.0
    [ Ptot= 55.69 mm ]
    fname : C:\Users\pchiocchio\AppData\Local\Temp\425a9a70-92a1-415b-a3e1-ac09acf5d6f2\c578a8f4-221c-4c52-bf4c-
    remark: 10 Year 6 Hour AES (Bloor, TRCA)
*
 ** CALIB NASHYD         0024  1  5.0    4.86    0.30  2.92  28.24 0.51   0.000
    [CN=90.0         ]
    [ N = 3.0:Tp 0.34]
*
    READ STORM                 15.0
    [ Ptot= 55.69 mm ]
    fname : C:\Users\pchiocchio\AppData\Local\Temp\425a9a70-92a1-415b-a3e1-ac09acf5d6f2\c578a8f4-221c-4c52-bf4c-
    remark: 10 Year 6 Hour AES (Bloor, TRCA)
*
 ** CALIB NASHYD         0025  1  5.0    5.72    0.43  2.83  28.21 0.51   0.000
    [CN=90.0         ]
    [ N = 3.0:Tp 0.23]
*
    ADD [  0022+  0023]  0026  3  5.0    8.22    0.58  2.75  28.10  n/a   0.000
*
    ADD [  0026+  0024]  0026  1  5.0   13.08    0.86  2.83  28.15  n/a   0.000
*
    ADD [  0026+  0025]  0026  3  5.0   18.80    1.29  2.83  28.17  n/a   0.000
*
    READ STORM                 15.0
    [ Ptot= 55.69 mm ]
    fname : C:\Users\pchiocchio\AppData\Local\Temp\425a9a70-92a1-415b-a3e1-ac09acf5d6f2\c578a8f4-221c-4c52-bf4c-
    remark: 10 Year 6 Hour AES (Bloor, TRCA)
*
 ** CALIB NASHYD         0028  1  5.0    2.78    0.21  2.83  28.21 0.51   0.000
    [CN=90.0         ]
    [ N = 3.0:Tp 0.23]
```

```
*
    READ STORM                 15.0
    [ Ptot= 55.69 mm ]
    fname : C:\Users\pchiocchio\AppData\Local\Temp\425a9a70-92a1-415b-a3e1-ac09acf5d6f2\c578a8f4-221c-4c52-bf4c-
    remark: 10 Year 6 Hour AES (Bloor, TRCA)
*
 ** CALIB NASHYD         0029  1  5.0    9.39    0.84  2.75  28.08 0.50   0.000
    [CN=90.0         ]
    [ N = 3.0:Tp 0.15]
*
    READ STORM                 15.0
    [ Ptot= 55.69 mm ]
    fname : C:\Users\pchiocchio\AppData\Local\Temp\425a9a70-92a1-415b-a3e1-ac09acf5d6f2\c578a8f4-221c-4c52-bf4c-
    remark: 10 Year 6 Hour AES (Bloor, TRCA)
*
 ** CALIB NASHYD         0030  1  5.0    1.69    0.16  2.75  27.51 0.49   0.000
    [CN=90.0         ]
    [ N = 3.0:Tp 0.10]
*
    READ STORM                 15.0
    [ Ptot= 55.69 mm ]
    fname : C:\Users\pchiocchio\AppData\Local\Temp\425a9a70-92a1-415b-a3e1-ac09acf5d6f2\c578a8f4-221c-4c52-bf4c-
    remark: 10 Year 6 Hour AES (Bloor, TRCA)
*
 ** CALIB NASHYD         0031  1  5.0    2.93    0.27  2.75  27.96 0.50   0.000
    [CN=90.0         ]
    [ N = 3.0:Tp 0.13]
*
    READ STORM                 15.0
    [ Ptot= 55.69 mm ]
    fname : C:\Users\pchiocchio\AppData\Local\Temp\425a9a70-92a1-415b-a3e1-ac09acf5d6f2\c578a8f4-221c-4c52-bf4c-
    remark: 10 Year 6 Hour AES (Bloor, TRCA)
*
 ** CALIB NASHYD         0032  1  5.0    4.99    0.44  2.75  28.12 0.50   0.000
    [CN=90.0         ]
    [ N = 3.0:Tp 0.16]
*
    ADD [  0029+  0030]  0033  3  5.0   11.08    1.01  2.75  27.99  n/a   0.000
*
    ADD [  0033+  0031]  0033  1  5.0   14.01    1.28  2.75  27.99  n/a   0.000
*
    ADD [  0033+  0032]  0033  3  5.0   19.00    1.72  2.75  28.02  n/a   0.000
*
    READ STORM                 15.0
    [ Ptot= 55.69 mm ]
    fname : C:\Users\pchiocchio\AppData\Local\Temp\425a9a70-92a1-415b-a3e1-ac09acf5d6f2\c578a8f4-221c-4c52-bf4c-
    remark: 10 Year 6 Hour AES (Bloor, TRCA)
*
 ** CALIB NASHYD         0001  1  5.0    1.24    0.06  3.33  35.33 0.63   0.000
    [CN=95.0         ]
    [ N = 2.5:Tp 0.59]
*
    READ STORM                 15.0
    [ Ptot= 55.69 mm ]
    fname : C:\Users\pchiocchio\AppData\Local\Temp\425a9a70-92a1-415b-a3e1-ac09acf5d6f2\c578a8f4-221c-4c52-bf4c-
    remark: 10 Year 6 Hour AES (Bloor, TRCA)
*
 ** CALIB NASHYD         0002  1  5.0    1.96    0.08  3.50  35.34 0.63   0.000
    [CN=95.0         ]
    [ N = 2.5:Tp 0.77]
*
    READ STORM                 15.0
    [ Ptot= 55.69 mm ]
    fname : C:\Users\pchiocchio\AppData\Local\Temp\425a9a70-92a1-415b-a3e1-ac09acf5d6f2\c578a8f4-221c-4c52-bf4c-
    remark: 10 Year 6 Hour AES (Bloor, TRCA)
*
 ** CALIB NASHYD         0004  1  5.0   40.84    0.82  5.00  35.35 0.63   0.000
    [CN=95.0         ]
    [ N = 2.5:Tp 2.02]
*
    ADD [  0001+  0002]  0096  3  5.0    3.20    0.14  3.42  35.34  n/a   0.000
*
    ADD [  0096+  0004]  0096  1  5.0   44.04    0.88  4.83  35.35  n/a   0.000
*
    CHANNEL[ 2:  0096]   0066  1  5.0   44.04    0.79  5.67  35.35  n/a   0.000
*
    READ STORM                 15.0
    [ Ptot= 55.69 mm ]
    fname : C:\Users\pchiocchio\AppData\Local\Temp\425a9a70-92a1-415b-a3e1-ac09acf5d6f2\c578a8f4-221c-4c52-bf4c-
    remark: 10 Year 6 Hour AES (Bloor, TRCA)
*
 ** CALIB NASHYD         0005  1  5.0   34.73    0.36  7.33  35.35 0.63   0.000
    [CN=95.0         ]
    [ N = 2.5:Tp 4.29]
*
    ADD [  0005+  0066]  0003  3  5.0   78.77    1.11  6.00  35.35  n/a   0.000
*
    CHANNEL[ 2:  0003]   0078  1  5.0   78.77    1.07  6.58  35.35  n/a   0.000
*
    READ STORM                 15.0
    [ Ptot= 55.69 mm ]
    fname : C:\Users\pchiocchio\AppData\Local\Temp\425a9a70-92a1-415b-a3e1-ac09acf5d6f2\c578a8f4-221c-4c52-bf4c-
    remark: 10 Year 6 Hour AES (Bloor, TRCA)
*
 ** CALIB NASHYD         0021  1  5.0    2.77    0.13  3.42  35.34 0.63   0.000
```

```
    [CN=95.0         ]
    [ N = 2.5:Tp 0.67]
*
    READ STORM                 15.0
    [ Ptot= 55.69 mm ]
    fname : C:\Users\pchiocchio\AppData\Local\Temp\425a9a70-92a1-415b-a3e1-ac09acf5d6f2\c578a8f4-221c-4c52-bf4c-
    remark: 10 Year 6 Hour AES (Bloor, TRCA)
*
 ** CALIB NASHYD         0027  1  5.0   54.23    0.58  7.17  35.35 0.63   0.000
    [CN=95.0         ]
    [ N = 2.5:Tp 4.12]
*
    ADD [  0021+  0027]  0079  3  5.0   57.00    0.58  7.08  35.35  n/a   0.000
*
    ADD [  0079+  0078]  0079  1  5.0  135.77    1.65  6.67  35.35  n/a   0.000
*
    CHANNEL[ 2:  0079]   0080  1  5.0  135.77    1.64  7.00  35.35  n/a   0.000
*
    READ STORM                 15.0
    [ Ptot= 55.69 mm ]
    fname : C:\Users\pchiocchio\AppData\Local\Temp\425a9a70-92a1-415b-a3e1-ac09acf5d6f2\c578a8f4-221c-4c52-bf4c-
    remark: 10 Year 6 Hour AES (Bloor, TRCA)
*
 ** CALIB NASHYD         0020  1  5.0    9.50    0.27  4.50  35.35 0.63   0.000
    [CN=95.0         ]
    [ N = 3.0:Tp 1.59]
*
    ADD [  0020+  0080]  0106  3  5.0  145.27    1.75  6.67  35.35  n/a   0.000
*
    READ STORM                 15.0
    [ Ptot= 55.69 mm ]
    fname : C:\Users\pchiocchio\AppData\Local\Temp\425a9a70-92a1-415b-a3e1-ac09acf5d6f2\c578a8f4-221c-4c52-bf4c-
    remark: 10 Year 6 Hour AES (Bloor, TRCA)
*
 ** CALIB NASHYD         0019  1  5.0   18.32    0.31  5.50  35.35 0.63   0.000
    [CN=95.0         ]
    [ N = 2.5:Tp 2.47]
*
    ADD [  0106+  0019]  0018  3  5.0  163.59    2.03  6.50  35.35  n/a   0.000
*
    CHANNEL[ 2:  0018]   0081  1  5.0  163.59    2.03  6.58  35.35  n/a   0.000
*
    READ STORM                 15.0
    [ Ptot= 55.69 mm ]
    fname : C:\Users\pchiocchio\AppData\Local\Temp\425a9a70-92a1-415b-a3e1-ac09acf5d6f2\c578a8f4-221c-4c52-bf4c-
    remark: 10 Year 6 Hour AES (Bloor, TRCA)
*
 ** CALIB NASHYD         0036  1  5.0    6.46    0.23  3.83  35.34 0.63   0.000
    [CN=95.0         ]
    [ N = 2.5:Tp 0.99]
*
    ADD [  0036+  0081]  0035  3  5.0  170.05    2.08  6.50  35.35  n/a   0.000
*
    CHANNEL[ 2:  0035]   0082  1  5.0  170.05    2.06  6.83  35.35  n/a   0.000
*
    READ STORM                 15.0
    [ Ptot= 55.69 mm ]
    fname : C:\Users\pchiocchio\AppData\Local\Temp\425a9a70-92a1-415b-a3e1-ac09acf5d6f2\c578a8f4-221c-4c52-bf4c-
    remark: 10 Year 6 Hour AES (Bloor, TRCA)
*
 ** CALIB NASHYD         0044  1  5.0   24.38    0.25  7.33  35.35 0.63   0.000
    [CN=95.0         ]
    [ N = 2.5:Tp 4.29]
*
    ADD [  0044+  0082]  0056  3  5.0  194.43    2.31  6.83  35.35  n/a   0.000
*
    CHANNEL[ 2:  0056]   0083  1  5.0  194.43    2.30  7.08  35.35  n/a   0.000
*
    READ STORM                 15.0
    [ Ptot= 55.69 mm ]
    fname : C:\Users\pchiocchio\AppData\Local\Temp\425a9a70-92a1-415b-a3e1-ac09acf5d6f2\c578a8f4-221c-4c52-bf4c-
    remark: 10 Year 6 Hour AES (Bloor, TRCA)
*
 ** CALIB NASHYD         0043  1  5.0   10.09    0.41  3.58  35.34 0.63   0.000
    [CN=95.0         ]
    [ N = 2.5:Tp 0.81]
*
    READ STORM                 15.0
    [ Ptot= 55.69 mm ]
    fname : C:\Users\pchiocchio\AppData\Local\Temp\425a9a70-92a1-415b-a3e1-ac09acf5d6f2\c578a8f4-221c-4c52-bf4c-
    remark: 10 Year 6 Hour AES (Bloor, TRCA)
*
 ** CALIB NASHYD         0045  1  5.0    5.34    0.28  3.25  35.33 0.63   0.000
    [CN=95.0         ]
    [ N = 2.5:Tp 0.56]
*
    ADD [  0043+  0045]  0086  3  5.0   15.43    0.67  3.42  35.34  n/a   0.000
*
    ADD [  0086+  0083]  0086  1  5.0  209.86    2.35  6.83  35.35  n/a   0.000
*
    CHANNEL[ 2:  0086]   0085  1  5.0  209.86    2.34  7.08  35.35  n/a   0.000
*
    READ STORM                 15.0
    [ Ptot= 55.69 mm ]
    fname : C:\Users\pchiocchio\AppData\Local\Temp\425a9a70-92a1-415b-a3e1-ac09acf5d6f2\c578a8f4-221c-4c52-bf4c-
```

```
    remark: 10 Year 6 Hour AES (Bloor, TRCA)
*
 ** CALIB NASHYD         0017  1  5.0    7.10    0.36  3.33  35.33 0.63   0.000
    [CN=95.0         ]
    [ N = 2.5:Tp 0.58]
*
    CHANNEL[ 2:  0017]   0084  1  5.0    7.10    0.27  3.83  35.29  n/a   0.000
*
    READ STORM                 15.0
    [ Ptot= 55.69 mm ]
    fname : C:\Users\pchiocchio\AppData\Local\Temp\425a9a70-92a1-415b-a3e1-ac09acf5d6f2\c578a8f4-221c-4c52-bf4c-
    remark: 10 Year 6 Hour AES (Bloor, TRCA)
*
 ** CALIB NASHYD         0042  1  5.0   33.34    1.01  4.08  35.35 0.63   0.000
    [CN=95.0         ]
    [ N = 2.5:Tp 1.21]
*
    READ STORM                 15.0
    [ Ptot= 55.69 mm ]
    fname : C:\Users\pchiocchio\AppData\Local\Temp\425a9a70-92a1-415b-a3e1-ac09acf5d6f2\c578a8f4-221c-4c52-bf4c-
    remark: 10 Year 6 Hour AES (Bloor, TRCA)
*
 ** CALIB NASHYD         0046  1  5.0   75.42    1.36  5.33  35.35 0.63   0.000
    [CN=95.0         ]
    [ N = 2.5:Tp 2.29]
*
    ADD [  0042+  0046]  0055  3  5.0  108.76    2.21  4.67  35.35  n/a   0.000
*
    ADD [  0055+  0084]  0055  1  5.0  115.86    2.43  4.50  35.34  n/a   0.000
*
    ADD [  0055+  0085]  0055  3  5.0  325.72    4.04  5.50  35.34  n/a   0.000
*
    CHANNEL[ 2:  0055]   0087  1  5.0  325.72    4.03  5.75  35.34  n/a   0.000
*
    READ STORM                 15.0
    [ Ptot= 55.69 mm ]
    fname : C:\Users\pchiocchio\AppData\Local\Temp\425a9a70-92a1-415b-a3e1-ac09acf5d6f2\c578a8f4-221c-4c52-bf4c-
    remark: 10 Year 6 Hour AES (Bloor, TRCA)
*
 ** CALIB NASHYD         0006  1  5.0   22.56    0.50  4.67  33.72 0.61   0.000
    [CN=94.0         ]
    [ N = 2.5:Tp 1.70]
*
    CHANNEL[ 2:  0006]   0091  1  5.0   22.56    0.50  4.75  33.72  n/a   0.000
*
    READ STORM                 15.0
    [ Ptot= 55.69 mm ]
    fname : C:\Users\pchiocchio\AppData\Local\Temp\425a9a70-92a1-415b-a3e1-ac09acf5d6f2\c578a8f4-221c-4c52-bf4c-
    remark: 10 Year 6 Hour AES (Bloor, TRCA)
*
 ** CALIB NASHYD         0008  1  5.0    6.20    0.23  3.67  33.72 0.61   0.000
    [CN=94.0         ]
    [ N = 2.5:Tp 0.85]
*
    ADD [  0008+  0091]  0011  3  5.0   28.76    0.66  4.42  33.72  n/a   0.000
*
    CHANNEL[ 2:  0011]   0092  1  5.0   28.76    0.66  4.58  33.72  n/a   0.000
*
    READ STORM                 15.0
    [ Ptot= 55.69 mm ]
    fname : C:\Users\pchiocchio\AppData\Local\Temp\425a9a70-92a1-415b-a3e1-ac09acf5d6f2\c578a8f4-221c-4c52-bf4c-
    remark: 10 Year 6 Hour AES (Bloor, TRCA)
*
 ** CALIB NASHYD         0038  1  5.0    7.23    0.19  4.33  33.72 0.61   0.000
    [CN=94.0         ]
    [ N = 2.5:Tp 1.35]
*
    ADD [  0038+  0092]  0052  3  5.0   35.99    0.85  4.50  33.72  n/a   0.000
*
    READ STORM                 15.0
    [ Ptot= 55.69 mm ]
    fname : C:\Users\pchiocchio\AppData\Local\Temp\425a9a70-92a1-415b-a3e1-ac09acf5d6f2\c578a8f4-221c-4c52-bf4c-
    remark: 10 Year 6 Hour AES (Bloor, TRCA)
*
 ** CALIB NASHYD         0007  1  5.0    1.34    0.09  3.00  33.67 0.60   0.000
    [CN=94.0         ]
    [ N = 2.5:Tp 0.36]
*
    CHANNEL[ 2:  0007]   0089  1  5.0    1.34    0.06  3.42  33.59  n/a   0.000
*
    READ STORM                 15.0
    [ Ptot= 55.69 mm ]
    fname : C:\Users\pchiocchio\AppData\Local\Temp\425a9a70-92a1-415b-a3e1-ac09acf5d6f2\c578a8f4-221c-4c52-bf4c-
    remark: 10 Year 6 Hour AES (Bloor, TRCA)
*
 ** CALIB NASHYD         0009  1  5.0    5.08    0.18  3.75  33.72 0.61   0.000
    [CN=94.0         ]
    [ N = 2.5:Tp 0.94]
*
    ADD [  0089+  0009]  0010  3  5.0    6.42    0.24  3.67  33.69  n/a   0.000
*
    READ STORM                 15.0
    [ Ptot= 55.69 mm ]
    fname : C:\Users\pchiocchio\AppData\Local\Temp\425a9a70-92a1-415b-a3e1-ac09acf5d6f2\c578a8f4-221c-4c52-bf4c-
    remark: 10 Year 6 Hour AES (Bloor, TRCA)
```

```
*
 ** CALIB NASHYD         0100  1  5.0   14.67    0.24  4.58  23.06 0.41   0.000
    [CN=85.0         ]
    [ N = 2.5:Tp 1.53]
*
    READ STORM                 15.0
    [ Ptot= 55.69 mm ]
    fname : C:\Users\pchiocchio\AppData\Local\Temp\425a9a70-92a1-415b-a3e1-ac09acf5d6f2\c578a8f4-221c-4c52-bf4c-
    remark: 10 Year 6 Hour AES (Bloor, TRCA)
*
 ** CALIB NASHYD         0107  1  5.0    0.88    0.02  4.08  23.06 0.41   0.000
    [CN=85.0         ]
    [ N = 2.5:Tp 1.12]
*
    ADD [  0100+  0107]  0109  3  5.0   15.55    0.25  4.58  23.06  n/a   0.000
*
    ADD [  0010+  0109]  0108  3  5.0   21.97    0.46  4.08  26.17  n/a   0.000
*
    CHANNEL[ 2:  0108]   0094  1  5.0   21.97    0.42  4.50  26.17  n/a   0.000
*
    READ STORM                 15.0
    [ Ptot= 55.69 mm ]
    fname : C:\Users\pchiocchio\AppData\Local\Temp\425a9a70-92a1-415b-a3e1-ac09acf5d6f2\c578a8f4-221c-4c52-bf4c-
    remark: 10 Year 6 Hour AES (Bloor, TRCA)
*
 ** CALIB NASHYD         0037  1  5.0    9.00    0.20  4.67  33.72 0.61   0.000
    [CN=94.0         ]
    [ N = 2.5:Tp 1.70]
*
    ADD [  0037+  0094]  0053  3  5.0   30.97    0.61  4.58  28.36  n/a   0.000
*
    READ STORM                 15.0
    [ Ptot= 55.69 mm ]
    fname : C:\Users\pchiocchio\AppData\Local\Temp\425a9a70-92a1-415b-a3e1-ac09acf5d6f2\c578a8f4-221c-4c52-bf4c-
    remark: 10 Year 6 Hour AES (Bloor, TRCA)
*
 ** CALIB NASHYD         0013  1  5.0    7.42    0.21  4.17  33.72 0.61   0.000
    [CN=94.0         ]
    [ N = 2.5:Tp 1.22]
*
    READ STORM                 15.0
    [ Ptot= 55.69 mm ]
    fname : C:\Users\pchiocchio\AppData\Local\Temp\425a9a70-92a1-415b-a3e1-ac09acf5d6f2\c578a8f4-221c-4c52-bf4c-
    remark: 10 Year 6 Hour AES (Bloor, TRCA)
*
 ** CALIB NASHYD         0014  1  5.0    4.74    0.17  3.67  33.72 0.61   0.000
    [CN=94.0         ]
    [ N = 2.5:Tp 0.87]
*
    READ STORM                 15.0
    [ Ptot= 55.69 mm ]
    fname : C:\Users\pchiocchio\AppData\Local\Temp\425a9a70-92a1-415b-a3e1-ac09acf5d6f2\c578a8f4-221c-4c52-bf4c-
    remark: 10 Year 6 Hour AES (Bloor, TRCA)
*
 ** CALIB NASHYD         0015  1  5.0    7.40    0.20  4.25  33.72 0.61   0.000
    [CN=94.0         ]
    [ N = 2.5:Tp 1.28]
*
    READ STORM                 15.0
    [ Ptot= 55.69 mm ]
    fname : C:\Users\pchiocchio\AppData\Local\Temp\425a9a70-92a1-415b-a3e1-ac09acf5d6f2\c578a8f4-221c-4c52-bf4c-
    remark: 10 Year 6 Hour AES (Bloor, TRCA)
*
 ** CALIB NASHYD         0105  1  5.0    6.60    0.18  4.25  33.72 0.61   0.000
    [CN=94.0         ]
    [ N = 2.5:Tp 1.28]
*
    ADD [  0105+  0013]  0012  3  5.0   14.02    0.39  4.17  33.72  n/a   0.000
*
    ADD [  0012+  0014]  0012  1  5.0   18.76    0.56  4.00  33.72  n/a   0.000
*
    ADD [  0012+  0015]  0012  3  5.0   26.16    0.76  4.08  33.72  n/a   0.000
*
    CHANNEL[ 2:  0012]   0093  1  5.0   26.16    0.75  4.25  33.72  n/a   0.000
*
    READ STORM                 15.0
    [ Ptot= 55.69 mm ]
    fname : C:\Users\pchiocchio\AppData\Local\Temp\425a9a70-92a1-415b-a3e1-ac09acf5d6f2\c578a8f4-221c-4c52-bf4c-
    remark: 10 Year 6 Hour AES (Bloor, TRCA)
*
 ** CALIB NASHYD         0039  1  5.0   13.25    0.35  4.33  33.72 0.61   0.000
    [CN=94.0         ]
    [ N = 2.5:Tp 1.35]
*
    ADD [  0039+  0093]  0051  3  5.0   39.41    1.10  4.25  33.72  n/a   0.000
*
    READ STORM                 15.0
    [ Ptot= 55.69 mm ]
    fname : C:\Users\pchiocchio\AppData\Local\Temp\425a9a70-92a1-415b-a3e1-ac09acf5d6f2\c578a8f4-221c-4c52-bf4c-
    remark: 10 Year 6 Hour AES (Bloor, TRCA)
*
 ** CALIB NASHYD         0040  1  5.0    7.26    0.21  4.17  33.72 0.61   0.000
    [CN=94.0         ]
    [ N = 2.5:Tp 1.23]
*
```

```
    READ STORM                 15.0
    [ Ptot= 55.69 mm ]
    fname : C:\Users\pchiocchio\AppData\Local\Temp\425a9a70-92a1-415b-a3e1-ac09acf5d6f2\c578a8f4-221c-4c52-bf4c-
    remark: 10 Year 6 Hour AES (Bloor, TRCA)
*
 ** CALIB NASHYD         0102  1  5.0    4.10    0.08  4.08  23.06 0.41   0.000
    [CN=85.0         ]
    [ N = 2.5:Tp 1.12]
*
    CHANNEL[ 2:  0102]   0101  1  5.0    4.10    0.08  4.50  23.06  n/a   0.000
*
    ADD [  0101+  0040]  0090  3  5.0   11.36    0.28  4.25  29.87  n/a   0.000
*
    ADD [  0090+  0051]  0090  1  5.0   50.77    1.38  4.25  32.86  n/a   0.000
*
    ADD [  0090+  0052]  0090  3  5.0   86.76    2.22  4.33  33.22  n/a   0.000
*
    ADD [  0090+  0053]  0090  1  5.0  117.73    2.83  4.42  31.94  n/a   0.000
*
    CHANNEL[ 2:  0090]   0095  1  5.0  117.73    2.81  4.58  31.94  n/a   0.000
*
    READ STORM                 15.0
    [ Ptot= 55.69 mm ]
    fname : C:\Users\pchiocchio\AppData\Local\Temp\425a9a70-92a1-415b-a3e1-ac09acf5d6f2\c578a8f4-221c-4c52-bf4c-
    remark: 10 Year 6 Hour AES (Bloor, TRCA)
*
 ** CALIB NASHYD         0041  1  5.0   12.70    0.40  4.00  33.72 0.61   0.000
    [CN=94.0         ]
    [ N = 2.5:Tp 1.08]
*
    ADD [  0041+  0095]  0050  3  5.0  130.43    3.18  4.50  32.11  n/a   0.000
*
    READ STORM                 15.0
    [ Ptot= 55.69 mm ]
    fname : C:\Users\pchiocchio\AppData\Local\Temp\425a9a70-92a1-415b-a3e1-ac09acf5d6f2\c578a8f4-221c-4c52-bf4c-
    remark: 10 Year 6 Hour AES (Bloor, TRCA)
*
 ** CALIB NASHYD         0047  1  5.0   71.95    1.43  5.00  35.35 0.63   0.000
    [CN=95.0         ]
    [ N = 2.5:Tp 2.04]
*
    ADD [  0047+  0050]  0054  3  5.0  202.38    4.55  4.58  33.26  n/a   0.000
*
    ADD [  0054+  0087]  0054  1  5.0  528.10    8.29  4.92  34.55  n/a   0.000
*
    CHANNEL[ 2:  0054]   0088  1  5.0  528.10    8.26  5.08  34.55  n/a   0.000
*
    READ STORM                 15.0
    [ Ptot= 55.69 mm ]
    fname : C:\Users\pchiocchio\AppData\Local\Temp\425a9a70-92a1-415b-a3e1-ac09acf5d6f2\c578a8f4-221c-4c52-bf4c-
    remark: 10 Year 6 Hour AES (Bloor, TRCA)
*
 ** CALIB NASHYD         0048  1  5.0   34.24    1.12  3.58  28.24 0.51   0.000
    [CN=90.0         ]
    [ N = 2.5:Tp 0.77]
*
    ADD [  0048+  0088]  0049  3  5.0  562.34    8.83  4.92  34.16  n/a   0.000
*
```

```
==========================================================================================

       V    V   I    SSSSS  U   U    A    L              (v 6.2.2001)
       V    V   I    SS     U   U   A A   L
        V  V    I     SS    U   U  AAAAA  L
        V  V    I      SS   U   U  A   A  L
         VV     I    SSSSS  UUUUU  A   A  LLLLL

        OOO   TTTTT  TTTTT  H   H  Y   Y  M   M   OOO    TM
       O   O    T      T    H   H   Y Y   MM MM  O   O
       O   O    T      T    H   H    Y    M   M  O   O
        OOO     T      T    H   H    Y    M   M   OOO
Developed and Distributed by Smart City Water Inc
Copyright 2007 - 2020 Smart City Water Inc
All rights reserved.


                  *****  S U M M A R Y   O U T P U T  *****


  Input   filename: C:\Program Files (x86)\Visual OTTHYMO 6.2\VO2\voin.dat
  Output  filename: C:\Users\pchiocchio\AppData\Local\Civica\VH5\d59fad6f-510d-48b8-a35a-1bee91f156cc\9594131d-579d-4a2b-b0b3-
bc314a1c7925\s
  Summary filename: C:\Users\pchiocchio\AppData\Local\Civica\VH5\d59fad6f-510d-48b8-a35a-1bee91f156cc\9594131d-579d-4a2b-b0b3-
bc314a1c7925\s


DATE: 02/02/2021                          TIME: 05:09:11

USER:


COMMENTS: ____________________________________________________________


  ************************************************
  ** SIMULATION : 10 - Year (12hr AES)          **
  ************************************************

  W/E COMMAND             HYD ID   DT    AREA  ' Qpeak Tpeak   R.V. R.C.   Qbase
                                  min     ha   '  cms   hrs     mm          cms

      START @  0.00 hrs
      --------------------
    READ STORM                 15.0
    [ Ptot= 62.71 mm ]
    fname : C:\Users\pchiocchio\AppData\Local\Temp\425a9a70-92a1-415b-a3e1-ac09acf5d6f2\cfd1e5d6-45b3-4b9b-9878-
    remark: 10 Year 12 Hour AES (Bloor, TRCA)
*
 ** CALIB NASHYD         0022  1  5.0    1.47    0.09  5.25  33.44 0.53   0.000
    [CN=90.0         ]
    [ N = 3.0:Tp 0.10]
*
    READ STORM                 15.0
    [ Ptot= 62.71 mm ]
    fname : C:\Users\pchiocchio\AppData\Local\Temp\425a9a70-92a1-415b-a3e1-ac09acf5d6f2\cfd1e5d6-45b3-4b9b-9878-
    remark: 10 Year 12 Hour AES (Bloor, TRCA)
*
 ** CALIB NASHYD         0023  1  5.0    6.75    0.38  5.25  34.31 0.55   0.000
    [CN=90.0         ]
    [ N = 3.0:Tp 0.26]
*
    READ STORM                 15.0
    [ Ptot= 62.71 mm ]
    fname : C:\Users\pchiocchio\AppData\Local\Temp\425a9a70-92a1-415b-a3e1-ac09acf5d6f2\cfd1e5d6-45b3-4b9b-9878-
    remark: 10 Year 12 Hour AES (Bloor, TRCA)
*
 ** CALIB NASHYD         0024  1  5.0    4.86    0.25  5.33  34.32 0.55   0.000
    [CN=90.0         ]
    [ N = 3.0:Tp 0.34]
*
    READ STORM                 15.0
    [ Ptot= 62.71 mm ]
    fname : C:\Users\pchiocchio\AppData\Local\Temp\425a9a70-92a1-415b-a3e1-ac09acf5d6f2\cfd1e5d6-45b3-4b9b-9878-
    remark: 10 Year 12 Hour AES (Bloor, TRCA)
*
 ** CALIB NASHYD         0025  1  5.0    5.72    0.33  5.25  34.29 0.55   0.000
    [CN=90.0         ]
    [ N = 3.0:Tp 0.23]
*
    ADD [  0022+  0023]  0026  3  5.0    8.22    0.46  5.25  34.15  n/a   0.000
*
    ADD [  0026+  0024]  0026  1  5.0   13.08    0.71  5.25  34.21  n/a   0.000
*
    ADD [  0026+  0025]  0026  3  5.0   18.80    1.04  5.25  34.24  n/a   0.000
*
    READ STORM                 15.0
    [ Ptot= 62.71 mm ]
    fname : C:\Users\pchiocchio\AppData\Local\Temp\425a9a70-92a1-415b-a3e1-ac09acf5d6f2\cfd1e5d6-45b3-4b9b-9878-
    remark: 10 Year 12 Hour AES (Bloor, TRCA)
*
 ** CALIB NASHYD         0028  1  5.0    2.78    0.16  5.25  34.29 0.55   0.000
    [CN=90.0         ]
    [ N = 3.0:Tp 0.23]
```

```
*
    READ STORM                 15.0
    [ Ptot= 62.71 mm ]
    fname : C:\Users\pchiocchio\AppData\Local\Temp\425a9a70-92a1-415b-a3e1-ac09acf5d6f2\cfd1e5d6-45b3-4b9b-9878-
    remark: 10 Year 12 Hour AES (Bloor, TRCA)
*
 ** CALIB NASHYD         0029  1  5.0    9.39    0.56  5.25  34.13 0.54   0.000
    [CN=90.0         ]
    [ N = 3.0:Tp 0.15]
*
    READ STORM                 15.0
    [ Ptot= 62.71 mm ]
    fname : C:\Users\pchiocchio\AppData\Local\Temp\425a9a70-92a1-415b-a3e1-ac09acf5d6f2\cfd1e5d6-45b3-4b9b-9878-
    remark: 10 Year 12 Hour AES (Bloor, TRCA)
*
 ** CALIB NASHYD         0030  1  5.0    1.69    0.10  5.25  33.44 0.53   0.000
    [CN=90.0         ]
    [ N = 3.0:Tp 0.10]
*
    READ STORM                 15.0
    [ Ptot= 62.71 mm ]
    fname : C:\Users\pchiocchio\AppData\Local\Temp\425a9a70-92a1-415b-a3e1-ac09acf5d6f2\cfd1e5d6-45b3-4b9b-9878-
    remark: 10 Year 12 Hour AES (Bloor, TRCA)
*
 ** CALIB NASHYD         0031  1  5.0    2.93    0.18  5.25  33.99 0.54   0.000
    [CN=90.0         ]
    [ N = 3.0:Tp 0.13]
*
    READ STORM                 15.0
    [ Ptot= 62.71 mm ]
    fname : C:\Users\pchiocchio\AppData\Local\Temp\425a9a70-92a1-415b-a3e1-ac09acf5d6f2\cfd1e5d6-45b3-4b9b-9878-
    remark: 10 Year 12 Hour AES (Bloor, TRCA)
*
 ** CALIB NASHYD         0032  1  5.0    4.99    0.30  5.25  34.17 0.54   0.000
    [CN=90.0         ]
    [ N = 3.0:Tp 0.16]
*
    ADD [  0029+  0030]  0033  3  5.0   11.08    0.67  5.25  34.03  n/a   0.000
*
    ADD [  0033+  0031]  0033  1  5.0   14.01    0.84  5.25  34.02  n/a   0.000
*
    ADD [  0033+  0032]  0033  3  5.0   19.00    1.14  5.25  34.06  n/a   0.000
*
    READ STORM                 15.0
    [ Ptot= 62.71 mm ]
    fname : C:\Users\pchiocchio\AppData\Local\Temp\425a9a70-92a1-415b-a3e1-ac09acf5d6f2\cfd1e5d6-45b3-4b9b-9878-
    remark: 10 Year 12 Hour AES (Bloor, TRCA)
*
 ** CALIB NASHYD         0001  1  5.0    1.24    0.06  5.50  42.03 0.67   0.000
    [CN=95.0         ]
    [ N = 2.5:Tp 0.59]
*
    READ STORM                 15.0
    [ Ptot= 62.71 mm ]
    fname : C:\Users\pchiocchio\AppData\Local\Temp\425a9a70-92a1-415b-a3e1-ac09acf5d6f2\cfd1e5d6-45b3-4b9b-9878-
    remark: 10 Year 12 Hour AES (Bloor, TRCA)
*
 ** CALIB NASHYD         0002  1  5.0    1.96    0.08  5.75  42.04 0.67   0.000
    [CN=95.0         ]
    [ N = 2.5:Tp 0.77]
*
    READ STORM                 15.0
    [ Ptot= 62.71 mm ]
    fname : C:\Users\pchiocchio\AppData\Local\Temp\425a9a70-92a1-415b-a3e1-ac09acf5d6f2\cfd1e5d6-45b3-4b9b-9878-
    remark: 10 Year 12 Hour AES (Bloor, TRCA)
*
 ** CALIB NASHYD         0004  1  5.0   40.84    0.84  7.50  42.05 0.67   0.000
    [CN=95.0         ]
    [ N = 2.5:Tp 2.02]
*
    ADD [  0001+  0002]  0096  3  5.0    3.20    0.13  5.67  42.03  n/a   0.000
*
    ADD [  0096+  0004]  0096  1  5.0   44.04    0.90  7.25  42.04  n/a   0.000
*
    CHANNEL[ 2:  0096]   0066  1  5.0   44.04    0.83  8.17  42.04  n/a   0.000
*
    READ STORM                 15.0
    [ Ptot= 62.71 mm ]
    fname : C:\Users\pchiocchio\AppData\Local\Temp\425a9a70-92a1-415b-a3e1-ac09acf5d6f2\cfd1e5d6-45b3-4b9b-9878-
    remark: 10 Year 12 Hour AES (Bloor, TRCA)
*
 ** CALIB NASHYD         0005  1  5.0   34.73    0.39 10.00  42.05 0.67   0.000
    [CN=95.0         ]
    [ N = 2.5:Tp 4.29]
*
    ADD [  0005+  0066]  0003  3  5.0   78.77    1.19  8.58  42.04  n/a   0.000
*
    CHANNEL[ 2:  0003]   0078  1  5.0   78.77    1.15  9.08  42.04  n/a   0.000
*
    READ STORM                 15.0
    [ Ptot= 62.71 mm ]
    fname : C:\Users\pchiocchio\AppData\Local\Temp\425a9a70-92a1-415b-a3e1-ac09acf5d6f2\cfd1e5d6-45b3-4b9b-9878-
    remark: 10 Year 12 Hour AES (Bloor, TRCA)
*
 ** CALIB NASHYD         0021  1  5.0    2.77    0.12  5.67  42.03 0.67   0.000
```

```
    [CN=95.0         ]
    [ N = 2.5:Tp 0.67]
*
    READ STORM                 15.0
    [ Ptot= 62.71 mm ]
    fname : C:\Users\pchiocchio\AppData\Local\Temp\425a9a70-92a1-415b-a3e1-ac09acf5d6f2\cfd1e5d6-45b3-4b9b-9878-
    remark: 10 Year 12 Hour AES (Bloor, TRCA)
*
 ** CALIB NASHYD         0027  1  5.0   54.23    0.64  9.83  42.05 0.67   0.000
    [CN=95.0         ]
    [ N = 2.5:Tp 4.12]
*
    ADD [  0021+  0027]  0079  3  5.0   57.00    0.65  9.67  42.05  n/a   0.000
*
    ADD [  0079+  0078]  0079  1  5.0  135.77    1.79  9.25  42.04  n/a   0.000
*
    CHANNEL[ 2:  0079]   0080  1  5.0  135.77    1.79  9.50  42.04  n/a   0.000
*
    READ STORM                 15.0
    [ Ptot= 62.71 mm ]
    fname : C:\Users\pchiocchio\AppData\Local\Temp\425a9a70-92a1-415b-a3e1-ac09acf5d6f2\cfd1e5d6-45b3-4b9b-9878-
    remark: 10 Year 12 Hour AES (Bloor, TRCA)
*
 ** CALIB NASHYD         0020  1  5.0    9.50    0.26  6.75  42.05 0.67   0.000
    [CN=95.0         ]
    [ N = 3.0:Tp 1.59]
*
    ADD [  0020+  0080]  0106  3  5.0  145.27    1.91  9.25  42.04  n/a   0.000
*
    READ STORM                 15.0
    [ Ptot= 62.71 mm ]
    fname : C:\Users\pchiocchio\AppData\Local\Temp\425a9a70-92a1-415b-a3e1-ac09acf5d6f2\cfd1e5d6-45b3-4b9b-9878-
    remark: 10 Year 12 Hour AES (Bloor, TRCA)
*
 ** CALIB NASHYD         0019  1  5.0   18.32    0.33  8.00  42.05 0.67   0.000
    [CN=95.0         ]
    [ N = 2.5:Tp 2.47]
*
    ADD [  0106+  0019]  0018  3  5.0  163.59    2.21  9.08  42.04  n/a   0.000
*
    CHANNEL[ 2:  0018]   0081  1  5.0  163.59    2.21  9.17  42.04  n/a   0.000
*
    READ STORM                 15.0
    [ Ptot= 62.71 mm ]
    fname : C:\Users\pchiocchio\AppData\Local\Temp\425a9a70-92a1-415b-a3e1-ac09acf5d6f2\cfd1e5d6-45b3-4b9b-9878-
    remark: 10 Year 12 Hour AES (Bloor, TRCA)
*
 ** CALIB NASHYD         0036  1  5.0    6.46    0.22  6.08  42.04 0.67   0.000
    [CN=95.0         ]
    [ N = 2.5:Tp 0.99]
*
    ADD [  0036+  0081]  0035  3  5.0  170.05    2.27  9.00  42.04  n/a   0.000
*
    CHANNEL[ 2:  0035]   0082  1  5.0  170.05    2.26  9.25  42.04  n/a   0.000
*
    READ STORM                 15.0
    [ Ptot= 62.71 mm ]
    fname : C:\Users\pchiocchio\AppData\Local\Temp\425a9a70-92a1-415b-a3e1-ac09acf5d6f2\cfd1e5d6-45b3-4b9b-9878-
    remark: 10 Year 12 Hour AES (Bloor, TRCA)
*
 ** CALIB NASHYD         0044  1  5.0   24.38    0.28 10.00  42.05 0.67   0.000
    [CN=95.0         ]
    [ N = 2.5:Tp 4.29]
*
    ADD [  0044+  0082]  0056  3  5.0  194.43    2.53  9.33  42.04  n/a   0.000
*
    CHANNEL[ 2:  0056]   0083  1  5.0  194.43    2.52  9.50  42.04  n/a   0.000
*
    READ STORM                 15.0
    [ Ptot= 62.71 mm ]
    fname : C:\Users\pchiocchio\AppData\Local\Temp\425a9a70-92a1-415b-a3e1-ac09acf5d6f2\cfd1e5d6-45b3-4b9b-9878-
    remark: 10 Year 12 Hour AES (Bloor, TRCA)
*
 ** CALIB NASHYD         0043  1  5.0   10.09    0.39  5.83  42.04 0.67   0.000
    [CN=95.0         ]
    [ N = 2.5:Tp 0.81]
*
    READ STORM                 15.0
    [ Ptot= 62.71 mm ]
    fname : C:\Users\pchiocchio\AppData\Local\Temp\425a9a70-92a1-415b-a3e1-ac09acf5d6f2\cfd1e5d6-45b3-4b9b-9878-
    remark: 10 Year 12 Hour AES (Bloor, TRCA)
*
 ** CALIB NASHYD         0045  1  5.0    5.34    0.26  5.50  42.03 0.67   0.000
    [CN=95.0         ]
    [ N = 2.5:Tp 0.56]
*
    ADD [  0043+  0045]  0086  3  5.0   15.43    0.63  5.67  42.03  n/a   0.000
*
    ADD [  0086+  0083]  0086  1  5.0  209.86    2.61  9.33  42.04  n/a   0.000
*
    CHANNEL[ 2:  0086]   0085  1  5.0  209.86    2.60  9.50  42.04  n/a   0.000
*
    READ STORM                 15.0
    [ Ptot= 62.71 mm ]
    fname : C:\Users\pchiocchio\AppData\Local\Temp\425a9a70-92a1-415b-a3e1-ac09acf5d6f2\cfd1e5d6-45b3-4b9b-9878-
```

```
    remark: 10 Year 12 Hour AES (Bloor, TRCA)
*
 ** CALIB NASHYD         0017  1  5.0    7.10    0.34  5.50  42.03 0.67   0.000
    [CN=95.0         ]
    [ N = 2.5:Tp 0.58]
*
    CHANNEL[ 2:  0017]   0084  1  5.0    7.10    0.26  6.08  42.00  n/a   0.000
*
    READ STORM                 15.0
    [ Ptot= 62.71 mm ]
    fname : C:\Users\pchiocchio\AppData\Local\Temp\425a9a70-92a1-415b-a3e1-ac09acf5d6f2\cfd1e5d6-45b3-4b9b-9878-
    remark: 10 Year 12 Hour AES (Bloor, TRCA)
*
 ** CALIB NASHYD         0042  1  5.0   33.34    0.99  6.42  42.04 0.67   0.000
    [CN=95.0         ]
    [ N = 2.5:Tp 1.21]
*
    READ STORM                 15.0
    [ Ptot= 62.71 mm ]
    fname : C:\Users\pchiocchio\AppData\Local\Temp\425a9a70-92a1-415b-a3e1-ac09acf5d6f2\cfd1e5d6-45b3-4b9b-9878-
    remark: 10 Year 12 Hour AES (Bloor, TRCA)
*
 ** CALIB NASHYD         0046  1  5.0   75.42    1.42  7.75  42.05 0.67   0.000
    [CN=95.0         ]
    [ N = 2.5:Tp 2.29]
*
    ADD [  0042+  0046]  0055  3  5.0  108.76    2.24  7.08  42.04  n/a   0.000
*
    ADD [  0055+  0084]  0055  1  5.0  115.86    2.45  6.92  42.04  n/a   0.000
*
    ADD [  0055+  0085]  0055  3  5.0  325.72    4.42  8.42  42.04  n/a   0.000
*
    CHANNEL[ 2:  0055]   0087  1  5.0  325.72    4.41  8.58  42.04  n/a   0.000
*
    READ STORM                 15.0
    [ Ptot= 62.71 mm ]
    fname : C:\Users\pchiocchio\AppData\Local\Temp\425a9a70-92a1-415b-a3e1-ac09acf5d6f2\cfd1e5d6-45b3-4b9b-9878-
    remark: 10 Year 12 Hour AES (Bloor, TRCA)
*
 ** CALIB NASHYD         0006  1  5.0   22.56    0.50  7.08  40.31 0.64   0.000
    [CN=94.0         ]
    [ N = 2.5:Tp 1.70]
*
    CHANNEL[ 2:  0006]   0091  1  5.0   22.56    0.50  7.17  40.31  n/a   0.000
*
    READ STORM                 15.0
    [ Ptot= 62.71 mm ]
    fname : C:\Users\pchiocchio\AppData\Local\Temp\425a9a70-92a1-415b-a3e1-ac09acf5d6f2\cfd1e5d6-45b3-4b9b-9878-
    remark: 10 Year 12 Hour AES (Bloor, TRCA)
*
 ** CALIB NASHYD         0008  1  5.0    6.20    0.22  5.92  40.30 0.64   0.000
    [CN=94.0         ]
    [ N = 2.5:Tp 0.85]
*
    ADD [  0008+  0091]  0011  3  5.0   28.76    0.66  6.75  40.31  n/a   0.000
*
    CHANNEL[ 2:  0011]   0092  1  5.0   28.76    0.66  6.92  40.31  n/a   0.000
*
    READ STORM                 15.0
    [ Ptot= 62.71 mm ]
    fname : C:\Users\pchiocchio\AppData\Local\Temp\425a9a70-92a1-415b-a3e1-ac09acf5d6f2\cfd1e5d6-45b3-4b9b-9878-
    remark: 10 Year 12 Hour AES (Bloor, TRCA)
*
 ** CALIB NASHYD         0038  1  5.0    7.23    0.19  6.58  40.31 0.64   0.000
    [CN=94.0         ]
    [ N = 2.5:Tp 1.35]
*
    ADD [  0038+  0092]  0052  3  5.0   35.99    0.85  6.83  40.31  n/a   0.000
*
    READ STORM                 15.0
    [ Ptot= 62.71 mm ]
    fname : C:\Users\pchiocchio\AppData\Local\Temp\425a9a70-92a1-415b-a3e1-ac09acf5d6f2\cfd1e5d6-45b3-4b9b-9878-
    remark: 10 Year 12 Hour AES (Bloor, TRCA)
*
 ** CALIB NASHYD         0007  1  5.0    1.34    0.08  5.33  40.25 0.64   0.000
    [CN=94.0         ]
    [ N = 2.5:Tp 0.36]
*
    CHANNEL[ 2:  0007]   0089  1  5.0    1.34    0.06  5.67  40.19  n/a   0.000
*
    READ STORM                 15.0
    [ Ptot= 62.71 mm ]
    fname : C:\Users\pchiocchio\AppData\Local\Temp\425a9a70-92a1-415b-a3e1-ac09acf5d6f2\cfd1e5d6-45b3-4b9b-9878-
    remark: 10 Year 12 Hour AES (Bloor, TRCA)
*
 ** CALIB NASHYD         0009  1  5.0    5.08    0.17  6.00  40.31 0.64   0.000
    [CN=94.0         ]
    [ N = 2.5:Tp 0.94]
*
    ADD [  0089+  0009]  0010  3  5.0    6.42    0.23  5.92  40.28  n/a   0.000
*
    READ STORM                 15.0
    [ Ptot= 62.71 mm ]
    fname : C:\Users\pchiocchio\AppData\Local\Temp\425a9a70-92a1-415b-a3e1-ac09acf5d6f2\cfd1e5d6-45b3-4b9b-9878-
    remark: 10 Year 12 Hour AES (Bloor, TRCA)
```

```
*
 ** CALIB NASHYD         0100  1  5.0   14.67    0.24  7.00  28.48 0.45   0.000
    [CN=85.0         ]
    [ N = 2.5:Tp 1.53]
*
    READ STORM                 15.0
    [ Ptot= 62.71 mm ]
    fname : C:\Users\pchiocchio\AppData\Local\Temp\425a9a70-92a1-415b-a3e1-ac09acf5d6f2\cfd1e5d6-45b3-4b9b-9878-
    remark: 10 Year 12 Hour AES (Bloor, TRCA)
*
 ** CALIB NASHYD         0107  1  5.0    0.88    0.02  6.42  28.48 0.45   0.000
    [CN=85.0         ]
    [ N = 2.5:Tp 1.12]
*
    ADD [  0100+  0107]  0109  3  5.0   15.55    0.26  6.92  28.48  n/a   0.000
*
    ADD [  0010+  0109]  0108  3  5.0   21.97    0.45  6.42  31.93  n/a   0.000
*
    CHANNEL[ 2:  0108]   0094  1  5.0   21.97    0.42  6.92  31.93  n/a   0.000
*
    READ STORM                 15.0
    [ Ptot= 62.71 mm ]
    fname : C:\Users\pchiocchio\AppData\Local\Temp\425a9a70-92a1-415b-a3e1-ac09acf5d6f2\cfd1e5d6-45b3-4b9b-9878-
    remark: 10 Year 12 Hour AES (Bloor, TRCA)
*
 ** CALIB NASHYD         0037  1  5.0    9.00    0.20  7.08  40.31 0.64   0.000
    [CN=94.0         ]
    [ N = 2.5:Tp 1.70]
*
    ADD [  0037+  0094]  0053  3  5.0   30.97    0.62  6.92  34.37  n/a   0.000
*
    READ STORM                 15.0
    [ Ptot= 62.71 mm ]
    fname : C:\Users\pchiocchio\AppData\Local\Temp\425a9a70-92a1-415b-a3e1-ac09acf5d6f2\cfd1e5d6-45b3-4b9b-9878-
    remark: 10 Year 12 Hour AES (Bloor, TRCA)
*
 ** CALIB NASHYD         0013  1  5.0    7.42    0.21  6.42  40.31 0.64   0.000
    [CN=94.0         ]
    [ N = 2.5:Tp 1.22]
*
    READ STORM                 15.0
    [ Ptot= 62.71 mm ]
    fname : C:\Users\pchiocchio\AppData\Local\Temp\425a9a70-92a1-415b-a3e1-ac09acf5d6f2\cfd1e5d6-45b3-4b9b-9878-
    remark: 10 Year 12 Hour AES (Bloor, TRCA)
*
 ** CALIB NASHYD         0014  1  5.0    4.74    0.16  5.92  40.30 0.64   0.000
    [CN=94.0         ]
    [ N = 2.5:Tp 0.87]
*
    READ STORM                 15.0
    [ Ptot= 62.71 mm ]
    fname : C:\Users\pchiocchio\AppData\Local\Temp\425a9a70-92a1-415b-a3e1-ac09acf5d6f2\cfd1e5d6-45b3-4b9b-9878-
    remark: 10 Year 12 Hour AES (Bloor, TRCA)
*
 ** CALIB NASHYD         0015  1  5.0    7.40    0.20  6.50  40.31 0.64   0.000
    [CN=94.0         ]
    [ N = 2.5:Tp 1.28]
*
    READ STORM                 15.0
    [ Ptot= 62.71 mm ]
    fname : C:\Users\pchiocchio\AppData\Local\Temp\425a9a70-92a1-415b-a3e1-ac09acf5d6f2\cfd1e5d6-45b3-4b9b-9878-
    remark: 10 Year 12 Hour AES (Bloor, TRCA)
*
 ** CALIB NASHYD         0105  1  5.0    6.60    0.18  6.50  40.31 0.64   0.000
    [CN=94.0         ]
    [ N = 2.5:Tp 1.28]
*
    ADD [  0105+  0013]  0012  3  5.0   14.02    0.39  6.50  40.31  n/a   0.000
*
    ADD [  0012+  0014]  0012  1  5.0   18.76    0.54  6.33  40.31  n/a   0.000
*
    ADD [  0012+  0015]  0012  3  5.0   26.16    0.74  6.33  40.31  n/a   0.000
*
    CHANNEL[ 2:  0012]   0093  1  5.0   26.16    0.73  6.58  40.31  n/a   0.000
*
    READ STORM                 15.0
    [ Ptot= 62.71 mm ]
    fname : C:\Users\pchiocchio\AppData\Local\Temp\425a9a70-92a1-415b-a3e1-ac09acf5d6f2\cfd1e5d6-45b3-4b9b-9878-
    remark: 10 Year 12 Hour AES (Bloor, TRCA)
*
 ** CALIB NASHYD         0039  1  5.0   13.25    0.35  6.58  40.31 0.64   0.000
    [CN=94.0         ]
    [ N = 2.5:Tp 1.35]
*
    ADD [  0039+  0093]  0051  3  5.0   39.41    1.08  6.58  40.31  n/a   0.000
*
    READ STORM                 15.0
    [ Ptot= 62.71 mm ]
    fname : C:\Users\pchiocchio\AppData\Local\Temp\425a9a70-92a1-415b-a3e1-ac09acf5d6f2\cfd1e5d6-45b3-4b9b-9878-
    remark: 10 Year 12 Hour AES (Bloor, TRCA)
*
 ** CALIB NASHYD         0040  1  5.0    7.26    0.20  6.42  40.31 0.64   0.000
    [CN=94.0         ]
    [ N = 2.5:Tp 1.23]
*
```

```
    READ STORM                 15.0
    [ Ptot= 62.71 mm ]
    fname : C:\Users\pchiocchio\AppData\Local\Temp\425a9a70-92a1-415b-a3e1-ac09acf5d6f2\cfd1e5d6-45b3-4b9b-9878-
    remark: 10 Year 12 Hour AES (Bloor, TRCA)
*
 ** CALIB NASHYD         0102  1  5.0    4.10    0.08  6.42  28.48 0.45   0.000
    [CN=85.0         ]
    [ N = 2.5:Tp 1.12]
*
    CHANNEL[ 2:  0102]   0101  1  5.0    4.10    0.08  6.83  28.48  n/a   0.000
*
    ADD [  0101+  0040]  0090  3  5.0   11.36    0.28  6.58  36.04  n/a   0.000
*
    ADD [  0090+  0051]  0090  1  5.0   50.77    1.36  6.58  39.35  n/a   0.000
*
    ADD [  0090+  0052]  0090  3  5.0   86.76    2.20  6.67  39.75  n/a   0.000
*
    ADD [  0090+  0053]  0090  1  5.0  117.73    2.81  6.75  38.33  n/a   0.000
*
    CHANNEL[ 2:  0090]   0095  1  5.0  117.73    2.80  6.83  38.33  n/a   0.000
*
    READ STORM                 15.0
    [ Ptot= 62.71 mm ]
    fname : C:\Users\pchiocchio\AppData\Local\Temp\425a9a70-92a1-415b-a3e1-ac09acf5d6f2\cfd1e5d6-45b3-4b9b-9878-
    remark: 10 Year 12 Hour AES (Bloor, TRCA)
*
 ** CALIB NASHYD         0041  1  5.0   12.70    0.39  6.25  40.31 0.64   0.000
    [CN=94.0         ]
    [ N = 2.5:Tp 1.08]
*
    ADD [  0041+  0095]  0050  3  5.0  130.43    3.15  6.83  38.53  n/a   0.000
*
    READ STORM                 15.0
    [ Ptot= 62.71 mm ]
    fname : C:\Users\pchiocchio\AppData\Local\Temp\425a9a70-92a1-415b-a3e1-ac09acf5d6f2\cfd1e5d6-45b3-4b9b-9878-
    remark: 10 Year 12 Hour AES (Bloor, TRCA)
*
 ** CALIB NASHYD         0047  1  5.0   71.95    1.47  7.50  42.05 0.67   0.000
    [CN=95.0         ]
    [ N = 2.5:Tp 2.04]
*
    ADD [  0047+  0050]  0054  3  5.0  202.38    4.56  6.92  39.78  n/a   0.000
*
    ADD [  0054+  0087]  0054  1  5.0  528.10    8.54  7.42  41.17  n/a   0.000
*
    CHANNEL[ 2:  0054]   0088  1  5.0  528.10    8.51  7.58  41.17  n/a   0.000
*
    READ STORM                 15.0
    [ Ptot= 62.71 mm ]
    fname : C:\Users\pchiocchio\AppData\Local\Temp\425a9a70-92a1-415b-a3e1-ac09acf5d6f2\cfd1e5d6-45b3-4b9b-9878-
    remark: 10 Year 12 Hour AES (Bloor, TRCA)
*
 ** CALIB NASHYD         0048  1  5.0   34.24    1.07  5.83  34.32 0.55   0.000
    [CN=90.0         ]
    [ N = 2.5:Tp 0.77]
*
    ADD [  0048+  0088]  0049  3  5.0  562.34    9.08  7.42  40.76  n/a   0.000
*
```

```
==========================================================================================

       V    V   I    SSSSS  U   U    A    L              (v 6.2.2001)
       V    V   I    SS     U   U   A A   L
        V  V    I     SS    U   U  AAAAA  L
        V  V    I      SS   U   U  A   A  L
         VV     I    SSSSS  UUUUU  A   A  LLLLL

        OOO   TTTTT  TTTTT  H   H  Y   Y  M   M   OOO    TM
       O   O    T      T    H   H   Y Y   MM MM  O   O
       O   O    T      T    H   H    Y    M   M  O   O
        OOO     T      T    H   H    Y    M   M   OOO
Developed and Distributed by Smart City Water Inc
Copyright 2007 - 2020 Smart City Water Inc
All rights reserved.


                  *****  S U M M A R Y   O U T P U T  *****


  Input   filename: C:\Program Files (x86)\Visual OTTHYMO 6.2\VO2\voin.dat
  Output  filename: C:\Users\pchiocchio\AppData\Local\Civica\VH5\d59fad6f-510d-48b8-a35a-1bee91f156cc\6c096d86-ac45-4416-9dc6-
877af914775d\s
  Summary filename: C:\Users\pchiocchio\AppData\Local\Civica\VH5\d59fad6f-510d-48b8-a35a-1bee91f156cc\6c096d86-ac45-4416-9dc6-
877af914775d\s


DATE: 02/02/2021                          TIME: 05:09:10

USER:


COMMENTS: ____________________________________________________________


  ************************************************
  ** SIMULATION : 25 - Year (6hr AES)           **
  ************************************************

  W/E COMMAND             HYD ID   DT    AREA  ' Qpeak Tpeak   R.V. R.C.   Qbase
                                  min     ha   '  cms   hrs     mm          cms

      START @  0.00 hrs
      --------------------
    READ STORM                 15.0
    [ Ptot= 65.59 mm ]
    fname : C:\Users\pchiocchio\AppData\Local\Temp\425a9a70-92a1-415b-a3e1-ac09acf5d6f2\cb2278f1-a1e4-4ebe-8c57-
    remark: 25 Year 6 Hour AES (Bloor, TRCA)
*
 ** CALIB NASHYD         0022  1  5.0    1.47    0.18  2.75  35.91 0.55   0.000
    [CN=90.0         ]
    [ N = 3.0:Tp 0.10]
*
    READ STORM                 15.0
    [ Ptot= 65.59 mm ]
    fname : C:\Users\pchiocchio\AppData\Local\Temp\425a9a70-92a1-415b-a3e1-ac09acf5d6f2\cb2278f1-a1e4-4ebe-8c57-
    remark: 25 Year 6 Hour AES (Bloor, TRCA)
*
 ** CALIB NASHYD         0023  1  5.0    6.75    0.63  2.83  36.85 0.56   0.000
    [CN=90.0         ]
    [ N = 3.0:Tp 0.26]
*
    READ STORM                 15.0
    [ Ptot= 65.59 mm ]
    fname : C:\Users\pchiocchio\AppData\Local\Temp\425a9a70-92a1-415b-a3e1-ac09acf5d6f2\cb2278f1-a1e4-4ebe-8c57-
    remark: 25 Year 6 Hour AES (Bloor, TRCA)
*
 ** CALIB NASHYD         0024  1  5.0    4.86    0.39  2.92  36.86 0.56   0.000
    [CN=90.0         ]
    [ N = 3.0:Tp 0.34]
*
    READ STORM                 15.0
    [ Ptot= 65.59 mm ]
    fname : C:\Users\pchiocchio\AppData\Local\Temp\425a9a70-92a1-415b-a3e1-ac09acf5d6f2\cb2278f1-a1e4-4ebe-8c57-
    remark: 25 Year 6 Hour AES (Bloor, TRCA)
*
 ** CALIB NASHYD         0025  1  5.0    5.72    0.57  2.83  36.83 0.56   0.000
    [CN=90.0         ]
    [ N = 3.0:Tp 0.23]
*
    ADD [  0022+  0023]  0026  3  5.0    8.22    0.77  2.75  36.68  n/a   0.000
*
    ADD [  0026+  0024]  0026  1  5.0   13.08    1.13  2.83  36.75  n/a   0.000
*
    ADD [  0026+  0025]  0026  3  5.0   18.80    1.70  2.83  36.77  n/a   0.000
*
    READ STORM                 15.0
    [ Ptot= 65.59 mm ]
    fname : C:\Users\pchiocchio\AppData\Local\Temp\425a9a70-92a1-415b-a3e1-ac09acf5d6f2\cb2278f1-a1e4-4ebe-8c57-
    remark: 25 Year 6 Hour AES (Bloor, TRCA)
*
 ** CALIB NASHYD         0028  1  5.0    2.78    0.28  2.83  36.83 0.56   0.000
    [CN=90.0         ]
    [ N = 3.0:Tp 0.23]
```

```
*
    READ STORM                 15.0
    [ Ptot= 65.59 mm ]
    fname : C:\Users\pchiocchio\AppData\Local\Temp\425a9a70-92a1-415b-a3e1-ac09acf5d6f2\cb2278f1-a1e4-4ebe-8c57-
    remark: 25 Year 6 Hour AES (Bloor, TRCA)
*
 ** CALIB NASHYD         0029  1  5.0    9.39    1.09  2.75  36.66 0.56   0.000
    [CN=90.0         ]
    [ N = 3.0:Tp 0.15]
*
    READ STORM                 15.0
    [ Ptot= 65.59 mm ]
    fname : C:\Users\pchiocchio\AppData\Local\Temp\425a9a70-92a1-415b-a3e1-ac09acf5d6f2\cb2278f1-a1e4-4ebe-8c57-
    remark: 25 Year 6 Hour AES (Bloor, TRCA)
*
 ** CALIB NASHYD         0030  1  5.0    1.69    0.21  2.75  35.91 0.55   0.000
    [CN=90.0         ]
    [ N = 3.0:Tp 0.10]
*
    READ STORM                 15.0
    [ Ptot= 65.59 mm ]
    fname : C:\Users\pchiocchio\AppData\Local\Temp\425a9a70-92a1-415b-a3e1-ac09acf5d6f2\cb2278f1-a1e4-4ebe-8c57-
    remark: 25 Year 6 Hour AES (Bloor, TRCA)
*
 ** CALIB NASHYD         0031  1  5.0    2.93    0.35  2.75  36.51 0.56   0.000
    [CN=90.0         ]
    [ N = 3.0:Tp 0.13]
*
    READ STORM                 15.0
    [ Ptot= 65.59 mm ]
    fname : C:\Users\pchiocchio\AppData\Local\Temp\425a9a70-92a1-415b-a3e1-ac09acf5d6f2\cb2278f1-a1e4-4ebe-8c57-
    remark: 25 Year 6 Hour AES (Bloor, TRCA)
*
 ** CALIB NASHYD         0032  1  5.0    4.99    0.57  2.75  36.70 0.56   0.000
    [CN=90.0         ]
    [ N = 3.0:Tp 0.16]
*
    ADD [  0029+  0030]  0033  3  5.0   11.08    1.30  2.75  36.54  n/a   0.000
*
    ADD [  0033+  0031]  0033  1  5.0   14.01    1.65  2.75  36.54  n/a   0.000
*
    ADD [  0033+  0032]  0033  3  5.0   19.00    2.22  2.75  36.58  n/a   0.000
*
    READ STORM                 15.0
    [ Ptot= 65.59 mm ]
    fname : C:\Users\pchiocchio\AppData\Local\Temp\425a9a70-92a1-415b-a3e1-ac09acf5d6f2\cb2278f1-a1e4-4ebe-8c57-
    remark: 25 Year 6 Hour AES (Bloor, TRCA)
*
 ** CALIB NASHYD         0001  1  5.0    1.24    0.08  3.25  44.79 0.68   0.000
    [CN=95.0         ]
    [ N = 2.5:Tp 0.59]
*
    READ STORM                 15.0
    [ Ptot= 65.59 mm ]
    fname : C:\Users\pchiocchio\AppData\Local\Temp\425a9a70-92a1-415b-a3e1-ac09acf5d6f2\cb2278f1-a1e4-4ebe-8c57-
    remark: 25 Year 6 Hour AES (Bloor, TRCA)
*
 ** CALIB NASHYD         0002  1  5.0    1.96    0.10  3.50  44.80 0.68   0.000
    [CN=95.0         ]
    [ N = 2.5:Tp 0.77]
*
    READ STORM                 15.0
    [ Ptot= 65.59 mm ]
    fname : C:\Users\pchiocchio\AppData\Local\Temp\425a9a70-92a1-415b-a3e1-ac09acf5d6f2\cb2278f1-a1e4-4ebe-8c57-
    remark: 25 Year 6 Hour AES (Bloor, TRCA)
*
 ** CALIB NASHYD         0004  1  5.0   40.84    1.04  5.00  44.81 0.68   0.000
    [CN=95.0         ]
    [ N = 2.5:Tp 2.02]
*
    ADD [  0001+  0002]  0096  3  5.0    3.20    0.18  3.42  44.80  n/a   0.000
*
    ADD [  0096+  0004]  0096  1  5.0   44.04    1.12  4.75  44.81  n/a   0.000
*
    CHANNEL[ 2:  0096]   0066  1  5.0   44.04    1.01  5.67  44.81  n/a   0.000
*
    READ STORM                 15.0
    [ Ptot= 65.59 mm ]
    fname : C:\Users\pchiocchio\AppData\Local\Temp\425a9a70-92a1-415b-a3e1-ac09acf5d6f2\cb2278f1-a1e4-4ebe-8c57-
    remark: 25 Year 6 Hour AES (Bloor, TRCA)
*
 ** CALIB NASHYD         0005  1  5.0   34.73    0.45  7.33  44.81 0.68   0.000
    [CN=95.0         ]
    [ N = 2.5:Tp 4.29]
*
    ADD [  0005+  0066]  0003  3  5.0   78.77    1.41  5.92  44.81  n/a   0.000
*
    CHANNEL[ 2:  0003]   0078  1  5.0   78.77    1.37  6.50  44.81  n/a   0.000
*
    READ STORM                 15.0
    [ Ptot= 65.59 mm ]
    fname : C:\Users\pchiocchio\AppData\Local\Temp\425a9a70-92a1-415b-a3e1-ac09acf5d6f2\cb2278f1-a1e4-4ebe-8c57-
    remark: 25 Year 6 Hour AES (Bloor, TRCA)
*
 ** CALIB NASHYD         0021  1  5.0    2.77    0.16  3.42  44.80 0.68   0.000
```

```
    [CN=95.0         ]
    [ N = 2.5:Tp 0.67]
*
    READ STORM                 15.0
    [ Ptot= 65.59 mm ]
    fname : C:\Users\pchiocchio\AppData\Local\Temp\425a9a70-92a1-415b-a3e1-ac09acf5d6f2\cb2278f1-a1e4-4ebe-8c57-
    remark: 25 Year 6 Hour AES (Bloor, TRCA)
*
 ** CALIB NASHYD         0027  1  5.0   54.23    0.73  7.17  44.81 0.68   0.000
    [CN=95.0         ]
    [ N = 2.5:Tp 4.12]
*
    ADD [  0021+  0027]  0079  3  5.0   57.00    0.74  7.00  44.81  n/a   0.000
*
    ADD [  0079+  0078]  0079  1  5.0  135.77    2.10  6.58  44.81  n/a   0.000
*
    CHANNEL[ 2:  0079]   0080  1  5.0  135.77    2.09  6.83  44.81  n/a   0.000
*
    READ STORM                 15.0
    [ Ptot= 65.59 mm ]
    fname : C:\Users\pchiocchio\AppData\Local\Temp\425a9a70-92a1-415b-a3e1-ac09acf5d6f2\cb2278f1-a1e4-4ebe-8c57-
    remark: 25 Year 6 Hour AES (Bloor, TRCA)
*
 ** CALIB NASHYD         0020  1  5.0    9.50    0.34  4.42  44.81 0.68   0.000
    [CN=95.0         ]
    [ N = 3.0:Tp 1.59]
*
    ADD [  0020+  0080]  0106  3  5.0  145.27    2.24  6.58  44.81  n/a   0.000
*
    READ STORM                 15.0
    [ Ptot= 65.59 mm ]
    fname : C:\Users\pchiocchio\AppData\Local\Temp\425a9a70-92a1-415b-a3e1-ac09acf5d6f2\cb2278f1-a1e4-4ebe-8c57-
    remark: 25 Year 6 Hour AES (Bloor, TRCA)
*
 ** CALIB NASHYD         0019  1  5.0   18.32    0.39  5.42  44.81 0.68   0.000
    [CN=95.0         ]
    [ N = 2.5:Tp 2.47]
*
    ADD [  0106+  0019]  0018  3  5.0  163.59    2.60  6.42  44.81  n/a   0.000
*
    CHANNEL[ 2:  0018]   0081  1  5.0  163.59    2.60  6.50  44.81  n/a   0.000
*
    READ STORM                 15.0
    [ Ptot= 65.59 mm ]
    fname : C:\Users\pchiocchio\AppData\Local\Temp\425a9a70-92a1-415b-a3e1-ac09acf5d6f2\cb2278f1-a1e4-4ebe-8c57-
    remark: 25 Year 6 Hour AES (Bloor, TRCA)
*
 ** CALIB NASHYD         0036  1  5.0    6.46    0.29  3.83  44.81 0.68   0.000
    [CN=95.0         ]
    [ N = 2.5:Tp 0.99]
*
    ADD [  0036+  0081]  0035  3  5.0  170.05    2.67  6.33  44.81  n/a   0.000
*
    CHANNEL[ 2:  0035]   0082  1  5.0  170.05    2.65  6.58  44.81  n/a   0.000
*
    READ STORM                 15.0
    [ Ptot= 65.59 mm ]
    fname : C:\Users\pchiocchio\AppData\Local\Temp\425a9a70-92a1-415b-a3e1-ac09acf5d6f2\cb2278f1-a1e4-4ebe-8c57-
    remark: 25 Year 6 Hour AES (Bloor, TRCA)
*
 ** CALIB NASHYD         0044  1  5.0   24.38    0.32  7.33  44.81 0.68   0.000
    [CN=95.0         ]
    [ N = 2.5:Tp 4.29]
*
    ADD [  0044+  0082]  0056  3  5.0  194.43    2.96  6.67  44.81  n/a   0.000
*
    CHANNEL[ 2:  0056]   0083  1  5.0  194.43    2.96  6.83  44.81  n/a   0.000
*
    READ STORM                 15.0
    [ Ptot= 65.59 mm ]
    fname : C:\Users\pchiocchio\AppData\Local\Temp\425a9a70-92a1-415b-a3e1-ac09acf5d6f2\cb2278f1-a1e4-4ebe-8c57-
    remark: 25 Year 6 Hour AES (Bloor, TRCA)
*
 ** CALIB NASHYD         0043  1  5.0   10.09    0.52  3.58  44.80 0.68   0.000
    [CN=95.0         ]
    [ N = 2.5:Tp 0.81]
*
    READ STORM                 15.0
    [ Ptot= 65.59 mm ]
    fname : C:\Users\pchiocchio\AppData\Local\Temp\425a9a70-92a1-415b-a3e1-ac09acf5d6f2\cb2278f1-a1e4-4ebe-8c57-
    remark: 25 Year 6 Hour AES (Bloor, TRCA)
*
 ** CALIB NASHYD         0045  1  5.0    5.34    0.35  3.25  44.79 0.68   0.000
    [CN=95.0         ]
    [ N = 2.5:Tp 0.56]
*
    ADD [  0043+  0045]  0086  3  5.0   15.43    0.86  3.42  44.80  n/a   0.000
*
    ADD [  0086+  0083]  0086  1  5.0  209.86    3.04  6.58  44.81  n/a   0.000
*
    CHANNEL[ 2:  0086]   0085  1  5.0  209.86    3.02  6.83  44.81  n/a   0.000
*
    READ STORM                 15.0
    [ Ptot= 65.59 mm ]
    fname : C:\Users\pchiocchio\AppData\Local\Temp\425a9a70-92a1-415b-a3e1-ac09acf5d6f2\cb2278f1-a1e4-4ebe-8c57-
```

```
    remark: 25 Year 6 Hour AES (Bloor, TRCA)
*
 ** CALIB NASHYD         0017  1  5.0    7.10    0.46  3.25  44.79 0.68   0.000
    [CN=95.0         ]
    [ N = 2.5:Tp 0.58]
*
    CHANNEL[ 2:  0017]   0084  1  5.0    7.10    0.35  3.83  44.75  n/a   0.000
*
    READ STORM                 15.0
    [ Ptot= 65.59 mm ]
    fname : C:\Users\pchiocchio\AppData\Local\Temp\425a9a70-92a1-415b-a3e1-ac09acf5d6f2\cb2278f1-a1e4-4ebe-8c57-
    remark: 25 Year 6 Hour AES (Bloor, TRCA)
*
 ** CALIB NASHYD         0042  1  5.0   33.34    1.28  4.08  44.81 0.68   0.000
    [CN=95.0         ]
    [ N = 2.5:Tp 1.21]
*
    READ STORM                 15.0
    [ Ptot= 65.59 mm ]
    fname : C:\Users\pchiocchio\AppData\Local\Temp\425a9a70-92a1-415b-a3e1-ac09acf5d6f2\cb2278f1-a1e4-4ebe-8c57-
    remark: 25 Year 6 Hour AES (Bloor, TRCA)
*
 ** CALIB NASHYD         0046  1  5.0   75.42    1.73  5.25  44.81 0.68   0.000
    [CN=95.0         ]
    [ N = 2.5:Tp 2.29]
*
    ADD [  0042+  0046]  0055  3  5.0  108.76    2.81  4.58  44.81  n/a   0.000
*
    ADD [  0055+  0084]  0055  1  5.0  115.86    3.09  4.50  44.81  n/a   0.000
*
    ADD [  0055+  0085]  0055  3  5.0  325.72    5.26  5.58  44.81  n/a   0.000
*
    CHANNEL[ 2:  0055]   0087  1  5.0  325.72    5.24  5.83  44.81  n/a   0.000
*
    READ STORM                 15.0
    [ Ptot= 65.59 mm ]
    fname : C:\Users\pchiocchio\AppData\Local\Temp\425a9a70-92a1-415b-a3e1-ac09acf5d6f2\cb2278f1-a1e4-4ebe-8c57-
    remark: 25 Year 6 Hour AES (Bloor, TRCA)
*
 ** CALIB NASHYD         0006  1  5.0   22.56    0.64  4.67  43.04 0.66   0.000
    [CN=94.0         ]
    [ N = 2.5:Tp 1.70]
*
    CHANNEL[ 2:  0006]   0091  1  5.0   22.56    0.63  4.75  43.04  n/a   0.000
*
    READ STORM                 15.0
    [ Ptot= 65.59 mm ]
    fname : C:\Users\pchiocchio\AppData\Local\Temp\425a9a70-92a1-415b-a3e1-ac09acf5d6f2\cb2278f1-a1e4-4ebe-8c57-
    remark: 25 Year 6 Hour AES (Bloor, TRCA)
*
 ** CALIB NASHYD         0008  1  5.0    6.20    0.30  3.67  43.03 0.66   0.000
    [CN=94.0         ]
    [ N = 2.5:Tp 0.85]
*
    ADD [  0008+  0091]  0011  3  5.0   28.76    0.86  4.25  43.04  n/a   0.000
*
    CHANNEL[ 2:  0011]   0092  1  5.0   28.76    0.85  4.42  43.04  n/a   0.000
*
    READ STORM                 15.0
    [ Ptot= 65.59 mm ]
    fname : C:\Users\pchiocchio\AppData\Local\Temp\425a9a70-92a1-415b-a3e1-ac09acf5d6f2\cb2278f1-a1e4-4ebe-8c57-
    remark: 25 Year 6 Hour AES (Bloor, TRCA)
*
 ** CALIB NASHYD         0038  1  5.0    7.23    0.25  4.25  43.04 0.66   0.000
    [CN=94.0         ]
    [ N = 2.5:Tp 1.35]
*
    ADD [  0038+  0092]  0052  3  5.0   35.99    1.09  4.42  43.04  n/a   0.000
*
    READ STORM                 15.0
    [ Ptot= 65.59 mm ]
    fname : C:\Users\pchiocchio\AppData\Local\Temp\425a9a70-92a1-415b-a3e1-ac09acf5d6f2\cb2278f1-a1e4-4ebe-8c57-
    remark: 25 Year 6 Hour AES (Bloor, TRCA)
*
 ** CALIB NASHYD         0007  1  5.0    1.34    0.11  2.92  42.97 0.66   0.000
    [CN=94.0         ]
    [ N = 2.5:Tp 0.36]
*
    CHANNEL[ 2:  0007]   0089  1  5.0    1.34    0.08  3.42  42.89  n/a   0.000
*
    READ STORM                 15.0
    [ Ptot= 65.59 mm ]
    fname : C:\Users\pchiocchio\AppData\Local\Temp\425a9a70-92a1-415b-a3e1-ac09acf5d6f2\cb2278f1-a1e4-4ebe-8c57-
    remark: 25 Year 6 Hour AES (Bloor, TRCA)
*
 ** CALIB NASHYD         0009  1  5.0    5.08    0.23  3.75  43.03 0.66   0.000
    [CN=94.0         ]
    [ N = 2.5:Tp 0.94]
*
    ADD [  0089+  0009]  0010  3  5.0    6.42    0.30  3.58  43.00  n/a   0.000
*
    READ STORM                 15.0
    [ Ptot= 65.59 mm ]
    fname : C:\Users\pchiocchio\AppData\Local\Temp\425a9a70-92a1-415b-a3e1-ac09acf5d6f2\cb2278f1-a1e4-4ebe-8c57-
    remark: 25 Year 6 Hour AES (Bloor, TRCA)
```

```
*
 ** CALIB NASHYD         0100  1  5.0   14.67    0.32  4.58  30.77 0.47   0.000
    [CN=85.0         ]
    [ N = 2.5:Tp 1.53]
*
    READ STORM                 15.0
    [ Ptot= 65.59 mm ]
    fname : C:\Users\pchiocchio\AppData\Local\Temp\425a9a70-92a1-415b-a3e1-ac09acf5d6f2\cb2278f1-a1e4-4ebe-8c57-
    remark: 25 Year 6 Hour AES (Bloor, TRCA)
*
 ** CALIB NASHYD         0107  1  5.0    0.88    0.02  4.08  30.77 0.47   0.000
    [CN=85.0         ]
    [ N = 2.5:Tp 1.12]
*
    ADD [  0100+  0107]  0109  3  5.0   15.55    0.34  4.50  30.77  n/a   0.000
*
    ADD [  0010+  0109]  0108  3  5.0   21.97    0.60  4.00  34.35  n/a   0.000
*
    CHANNEL[ 2:  0108]   0094  1  5.0   21.97    0.58  4.42  34.35  n/a   0.000
*
    READ STORM                 15.0
    [ Ptot= 65.59 mm ]
    fname : C:\Users\pchiocchio\AppData\Local\Temp\425a9a70-92a1-415b-a3e1-ac09acf5d6f2\cb2278f1-a1e4-4ebe-8c57-
    remark: 25 Year 6 Hour AES (Bloor, TRCA)
*
 ** CALIB NASHYD         0037  1  5.0    9.00    0.25  4.67  43.04 0.66   0.000
    [CN=94.0         ]
    [ N = 2.5:Tp 1.70]
*
    ADD [  0037+  0094]  0053  3  5.0   30.97    0.83  4.50  36.87  n/a   0.000
*
    READ STORM                 15.0
    [ Ptot= 65.59 mm ]
    fname : C:\Users\pchiocchio\AppData\Local\Temp\425a9a70-92a1-415b-a3e1-ac09acf5d6f2\cb2278f1-a1e4-4ebe-8c57-
    remark: 25 Year 6 Hour AES (Bloor, TRCA)
*
 ** CALIB NASHYD         0013  1  5.0    7.42    0.27  4.08  43.03 0.66   0.000
    [CN=94.0         ]
    [ N = 2.5:Tp 1.22]
*
    READ STORM                 15.0
    [ Ptot= 65.59 mm ]
    fname : C:\Users\pchiocchio\AppData\Local\Temp\425a9a70-92a1-415b-a3e1-ac09acf5d6f2\cb2278f1-a1e4-4ebe-8c57-
    remark: 25 Year 6 Hour AES (Bloor, TRCA)
*
 ** CALIB NASHYD         0014  1  5.0    4.74    0.22  3.67  43.03 0.66   0.000
    [CN=94.0         ]
    [ N = 2.5:Tp 0.87]
*
    READ STORM                 15.0
    [ Ptot= 65.59 mm ]
    fname : C:\Users\pchiocchio\AppData\Local\Temp\425a9a70-92a1-415b-a3e1-ac09acf5d6f2\cb2278f1-a1e4-4ebe-8c57-
    remark: 25 Year 6 Hour AES (Bloor, TRCA)
*
 ** CALIB NASHYD         0015  1  5.0    7.40    0.26  4.17  43.04 0.66   0.000
    [CN=94.0         ]
    [ N = 2.5:Tp 1.28]
*
    READ STORM                 15.0
    [ Ptot= 65.59 mm ]
    fname : C:\Users\pchiocchio\AppData\Local\Temp\425a9a70-92a1-415b-a3e1-ac09acf5d6f2\cb2278f1-a1e4-4ebe-8c57-
    remark: 25 Year 6 Hour AES (Bloor, TRCA)
*
 ** CALIB NASHYD         0105  1  5.0    6.60    0.23  4.17  43.04 0.66   0.000
    [CN=94.0         ]
    [ N = 2.5:Tp 1.28]
*
    ADD [  0105+  0013]  0012  3  5.0   14.02    0.50  4.17  43.03  n/a   0.000
*
    ADD [  0012+  0014]  0012  1  5.0   18.76    0.71  3.92  43.03  n/a   0.000
*
    ADD [  0012+  0015]  0012  3  5.0   26.16    0.97  4.00  43.03  n/a   0.000
*
    CHANNEL[ 2:  0012]   0093  1  5.0   26.16    0.96  4.17  43.03  n/a   0.000
*
    READ STORM                 15.0
    [ Ptot= 65.59 mm ]
    fname : C:\Users\pchiocchio\AppData\Local\Temp\425a9a70-92a1-415b-a3e1-ac09acf5d6f2\cb2278f1-a1e4-4ebe-8c57-
    remark: 25 Year 6 Hour AES (Bloor, TRCA)
*
 ** CALIB NASHYD         0039  1  5.0   13.25    0.45  4.25  43.04 0.66   0.000
    [CN=94.0         ]
    [ N = 2.5:Tp 1.35]
*
    ADD [  0039+  0093]  0051  3  5.0   39.41    1.41  4.25  43.03  n/a   0.000
*
    READ STORM                 15.0
    [ Ptot= 65.59 mm ]
    fname : C:\Users\pchiocchio\AppData\Local\Temp\425a9a70-92a1-415b-a3e1-ac09acf5d6f2\cb2278f1-a1e4-4ebe-8c57-
    remark: 25 Year 6 Hour AES (Bloor, TRCA)
*
 ** CALIB NASHYD         0040  1  5.0    7.26    0.26  4.08  43.03 0.66   0.000
    [CN=94.0         ]
    [ N = 2.5:Tp 1.23]
*
```

```
    READ STORM                 15.0
    [ Ptot= 65.59 mm ]
    fname : C:\Users\pchiocchio\AppData\Local\Temp\425a9a70-92a1-415b-a3e1-ac09acf5d6f2\cb2278f1-a1e4-4ebe-8c57-
    remark: 25 Year 6 Hour AES (Bloor, TRCA)
*
 ** CALIB NASHYD         0102  1  5.0    4.10    0.11  4.08  30.77 0.47   0.000
    [CN=85.0         ]
    [ N = 2.5:Tp 1.12]
*
    CHANNEL[ 2:  0102]   0101  1  5.0    4.10    0.11  4.42  30.77  n/a   0.000
*
    ADD [  0101+  0040]  0090  3  5.0   11.36    0.37  4.25  38.61  n/a   0.000
*
    ADD [  0090+  0051]  0090  1  5.0   50.77    1.78  4.25  42.04  n/a   0.000
*
    ADD [  0090+  0052]  0090  3  5.0   86.76    2.86  4.25  42.46  n/a   0.000
*
    ADD [  0090+  0053]  0090  1  5.0  117.73    3.69  4.33  40.99  n/a   0.000
*
    CHANNEL[ 2:  0090]   0095  1  5.0  117.73    3.67  4.42  40.99  n/a   0.000
*
    READ STORM                 15.0
    [ Ptot= 65.59 mm ]
    fname : C:\Users\pchiocchio\AppData\Local\Temp\425a9a70-92a1-415b-a3e1-ac09acf5d6f2\cb2278f1-a1e4-4ebe-8c57-
    remark: 25 Year 6 Hour AES (Bloor, TRCA)
*
 ** CALIB NASHYD         0041  1  5.0   12.70    0.51  3.92  43.03 0.66   0.000
    [CN=94.0         ]
    [ N = 2.5:Tp 1.08]
*
    ADD [  0041+  0095]  0050  3  5.0  130.43    4.14  4.42  41.19  n/a   0.000
*
    READ STORM                 15.0
    [ Ptot= 65.59 mm ]
    fname : C:\Users\pchiocchio\AppData\Local\Temp\425a9a70-92a1-415b-a3e1-ac09acf5d6f2\cb2278f1-a1e4-4ebe-8c57-
    remark: 25 Year 6 Hour AES (Bloor, TRCA)
*
 ** CALIB NASHYD         0047  1  5.0   71.95    1.82  5.00  44.81 0.68   0.000
    [CN=95.0         ]
    [ N = 2.5:Tp 2.04]
*
    ADD [  0047+  0050]  0054  3  5.0  202.38    5.88  4.50  42.48  n/a   0.000
*
    ADD [  0054+  0087]  0054  1  5.0  528.10   10.69  4.83  43.92  n/a   0.000
*
    CHANNEL[ 2:  0054]   0088  1  5.0  528.10   10.65  5.00  43.92  n/a   0.000
*
    READ STORM                 15.0
    [ Ptot= 65.59 mm ]
    fname : C:\Users\pchiocchio\AppData\Local\Temp\425a9a70-92a1-415b-a3e1-ac09acf5d6f2\cb2278f1-a1e4-4ebe-8c57-
    remark: 25 Year 6 Hour AES (Bloor, TRCA)
*
 ** CALIB NASHYD         0048  1  5.0   34.24    1.48  3.58  36.86 0.56   0.000
    [CN=90.0         ]
    [ N = 2.5:Tp 0.77]
*
    ADD [  0048+  0088]  0049  3  5.0  562.34   11.42  4.83  43.49  n/a   0.000
*
```

```
==========================================================================================

       V    V   I    SSSSS  U   U    A    L              (v 6.2.2001)
       V    V   I    SS     U   U   A A   L
        V  V    I     SS    U   U  AAAAA  L
        V  V    I      SS   U   U  A   A  L
         VV     I    SSSSS  UUUUU  A   A  LLLLL

        OOO   TTTTT  TTTTT  H   H  Y   Y  M   M   OOO    TM
       O   O    T      T    H   H   Y Y   MM MM  O   O
       O   O    T      T    H   H    Y    M   M  O   O
        OOO     T      T    H   H    Y    M   M   OOO
Developed and Distributed by Smart City Water Inc
Copyright 2007 - 2020 Smart City Water Inc
All rights reserved.


                  *****  S U M M A R Y   O U T P U T  *****


  Input   filename: C:\Program Files (x86)\Visual OTTHYMO 6.2\VO2\voin.dat
  Output  filename: C:\Users\pchiocchio\AppData\Local\Civica\VH5\d59fad6f-510d-48b8-a35a-1bee91f156cc\b0704292-a5cd-474b-94ad-
209f7713ca29\s
  Summary filename: C:\Users\pchiocchio\AppData\Local\Civica\VH5\d59fad6f-510d-48b8-a35a-1bee91f156cc\b0704292-a5cd-474b-94ad-
209f7713ca29\s


DATE: 02/02/2021                          TIME: 05:09:12

USER:


COMMENTS: ____________________________________________________________


  ************************************************
  ** SIMULATION : 25 - Year (12hr AES)          **
  ************************************************

  W/E COMMAND             HYD ID   DT    AREA  ' Qpeak Tpeak   R.V. R.C.   Qbase
                                   min     ha   '  cms   hrs     mm          cms

      START @  0.00 hrs
      --------------------
    READ STORM                 15.0
    [ Ptot= 73.10 mm ]
    fname : C:\Users\pchiocchio\AppData\Local\Temp\425a9a70-92a1-415b-a3e1-ac09acf5d6f2\a7a80449-cdd9-4cae-bb04-
    remark: 25 Year 12 Hour AES (Bloor, TRCA)
*
 ** CALIB NASHYD         0022  1  5.0    1.47    0.11  5.25  42.47 0.58   0.000
    [CN=90.0         ]
    [ N = 3.0:Tp 0.10]
*
    READ STORM                 15.0
    [ Ptot= 73.10 mm ]
    fname : C:\Users\pchiocchio\AppData\Local\Temp\425a9a70-92a1-415b-a3e1-ac09acf5d6f2\a7a80449-cdd9-4cae-bb04-
    remark: 25 Year 12 Hour AES (Bloor, TRCA)
*
 ** CALIB NASHYD         0023  1  5.0    6.75    0.47  5.25  43.57 0.60   0.000
    [CN=90.0         ]
    [ N = 3.0:Tp 0.26]
*
    READ STORM                 15.0
    [ Ptot= 73.10 mm ]
    fname : C:\Users\pchiocchio\AppData\Local\Temp\425a9a70-92a1-415b-a3e1-ac09acf5d6f2\a7a80449-cdd9-4cae-bb04-
    remark: 25 Year 12 Hour AES (Bloor, TRCA)
*
 ** CALIB NASHYD         0024  1  5.0    4.86    0.32  5.33  43.59 0.60   0.000
    [CN=90.0         ]
    [ N = 3.0:Tp 0.34]
*
    READ STORM                 15.0
    [ Ptot= 73.10 mm ]
    fname : C:\Users\pchiocchio\AppData\Local\Temp\425a9a70-92a1-415b-a3e1-ac09acf5d6f2\a7a80449-cdd9-4cae-bb04-
    remark: 25 Year 12 Hour AES (Bloor, TRCA)
*
 ** CALIB NASHYD         0025  1  5.0    5.72    0.41  5.25  43.55 0.60   0.000
    [CN=90.0         ]
    [ N = 3.0:Tp 0.23]
*
    ADD [  0022+  0023]  0026  3  5.0    8.22    0.58  5.25  43.37  n/a   0.000
*
    ADD [  0026+  0024]  0026  1  5.0   13.08    0.90  5.25  43.45  n/a   0.000
*
    ADD [  0026+  0025]  0026  3  5.0   18.80    1.31  5.25  43.48  n/a   0.000
*
    READ STORM                 15.0
    [ Ptot= 73.10 mm ]
    fname : C:\Users\pchiocchio\AppData\Local\Temp\425a9a70-92a1-415b-a3e1-ac09acf5d6f2\a7a80449-cdd9-4cae-bb04-
    remark: 25 Year 12 Hour AES (Bloor, TRCA)
*
 ** CALIB NASHYD         0028  1  5.0    2.78    0.20  5.25  43.55 0.60   0.000
    [CN=90.0         ]
    [ N = 3.0:Tp 0.23]
```

```
*
    READ STORM                 15.0
    [ Ptot= 73.10 mm ]
    fname : C:\Users\pchiocchio\AppData\Local\Temp\425a9a70-92a1-415b-a3e1-ac09acf5d6f2\a7a80449-cdd9-4cae-bb04-
    remark: 25 Year 12 Hour AES (Bloor, TRCA)
*
 ** CALIB NASHYD         0029  1  5.0    9.39    0.70  5.25  43.35 0.59   0.000
    [CN=90.0         ]
    [ N = 3.0:Tp 0.15]
*
    READ STORM                 15.0
    [ Ptot= 73.10 mm ]
    fname : C:\Users\pchiocchio\AppData\Local\Temp\425a9a70-92a1-415b-a3e1-ac09acf5d6f2\a7a80449-cdd9-4cae-bb04-
    remark: 25 Year 12 Hour AES (Bloor, TRCA)
*
 ** CALIB NASHYD         0030  1  5.0    1.69    0.13  5.25  42.47 0.58   0.000
    [CN=90.0         ]
    [ N = 3.0:Tp 0.10]
*
    READ STORM                 15.0
    [ Ptot= 73.10 mm ]
    fname : C:\Users\pchiocchio\AppData\Local\Temp\425a9a70-92a1-415b-a3e1-ac09acf5d6f2\a7a80449-cdd9-4cae-bb04-
    remark: 25 Year 12 Hour AES (Bloor, TRCA)
*
 ** CALIB NASHYD         0031  1  5.0    2.93    0.22  5.25  43.17 0.59   0.000
    [CN=90.0         ]
    [ N = 3.0:Tp 0.13]
*
    READ STORM                 15.0
    [ Ptot= 73.10 mm ]
    fname : C:\Users\pchiocchio\AppData\Local\Temp\425a9a70-92a1-415b-a3e1-ac09acf5d6f2\a7a80449-cdd9-4cae-bb04-
    remark: 25 Year 12 Hour AES (Bloor, TRCA)
*
 ** CALIB NASHYD         0032  1  5.0    4.99    0.37  5.25  43.40 0.59   0.000
    [CN=90.0         ]
    [ N = 3.0:Tp 0.16]
*
    ADD [  0029+  0030]  0033  3  5.0   11.08    0.83  5.25  43.21  n/a   0.000
*
    ADD [  0033+  0031]  0033  1  5.0   14.01    1.04  5.25  43.20  n/a   0.000
*
    ADD [  0033+  0032]  0033  3  5.0   19.00    1.41  5.25  43.26  n/a   0.000
*
    READ STORM                 15.0
    [ Ptot= 73.10 mm ]
    fname : C:\Users\pchiocchio\AppData\Local\Temp\425a9a70-92a1-415b-a3e1-ac09acf5d6f2\a7a80449-cdd9-4cae-bb04-
    remark: 25 Year 12 Hour AES (Bloor, TRCA)
*
 ** CALIB NASHYD         0001  1  5.0    1.24    0.07  5.50  52.05 0.71   0.000
    [CN=95.0         ]
    [ N = 2.5:Tp 0.59]
*
    READ STORM                 15.0
    [ Ptot= 73.10 mm ]
    fname : C:\Users\pchiocchio\AppData\Local\Temp\425a9a70-92a1-415b-a3e1-ac09acf5d6f2\a7a80449-cdd9-4cae-bb04-
    remark: 25 Year 12 Hour AES (Bloor, TRCA)
*
 ** CALIB NASHYD         0002  1  5.0    1.96    0.10  5.75  52.06 0.71   0.000
    [CN=95.0         ]
    [ N = 2.5:Tp 0.77]
*
    READ STORM                 15.0
    [ Ptot= 73.10 mm ]
    fname : C:\Users\pchiocchio\AppData\Local\Temp\425a9a70-92a1-415b-a3e1-ac09acf5d6f2\a7a80449-cdd9-4cae-bb04-
    remark: 25 Year 12 Hour AES (Bloor, TRCA)
*
 ** CALIB NASHYD         0004  1  5.0   40.84    1.05  7.42  52.07 0.71   0.000
    [CN=95.0         ]
    [ N = 2.5:Tp 2.02]
*
    ADD [  0001+  0002]  0096  3  5.0    3.20    0.17  5.58  52.05  n/a   0.000
*
    ADD [  0096+  0004]  0096  1  5.0   44.04    1.12  7.25  52.07  n/a   0.000
*
    CHANNEL[ 2:  0096]   0066  1  5.0   44.04    1.04  8.08  52.07  n/a   0.000
*
    READ STORM                 15.0
    [ Ptot= 73.10 mm ]
    fname : C:\Users\pchiocchio\AppData\Local\Temp\425a9a70-92a1-415b-a3e1-ac09acf5d6f2\a7a80449-cdd9-4cae-bb04-
    remark: 25 Year 12 Hour AES (Bloor, TRCA)
*
 ** CALIB NASHYD         0005  1  5.0   34.73    0.49 10.00  52.07 0.71   0.000
    [CN=95.0         ]
    [ N = 2.5:Tp 4.29]
*
    ADD [  0005+  0066]  0003  3  5.0   78.77    1.47  8.42  52.07  n/a   0.000
*
    CHANNEL[ 2:  0003]   0078  1  5.0   78.77    1.44  8.92  52.07  n/a   0.000
*
    READ STORM                 15.0
    [ Ptot= 73.10 mm ]
    fname : C:\Users\pchiocchio\AppData\Local\Temp\425a9a70-92a1-415b-a3e1-ac09acf5d6f2\a7a80449-cdd9-4cae-bb04-
    remark: 25 Year 12 Hour AES (Bloor, TRCA)
*
 ** CALIB NASHYD         0021  1  5.0    2.77    0.15  5.58  52.05 0.71   0.000
```

```
    [CN=95.0         ]
    [ N = 2.5:Tp 0.67]
*
    READ STORM                 15.0
    [ Ptot= 73.10 mm ]
    fname : C:\Users\pchiocchio\AppData\Local\Temp\425a9a70-92a1-415b-a3e1-ac09acf5d6f2\a7a80449-cdd9-4cae-bb04-
    remark: 25 Year 12 Hour AES (Bloor, TRCA)
*
 ** CALIB NASHYD         0027  1  5.0   54.23    0.79  9.75  52.07 0.71   0.000
    [CN=95.0         ]
    [ N = 2.5:Tp 4.12]
*
    ADD [  0021+  0027]  0079  3  5.0   57.00    0.80  9.58  52.07  n/a   0.000
*
    ADD [  0079+  0078]  0079  1  5.0  135.77    2.23  9.17  52.07  n/a   0.000
*
    CHANNEL[ 2:  0079]   0080  1  5.0  135.77    2.23  9.33  52.07  n/a   0.000
*
    READ STORM                 15.0
    [ Ptot= 73.10 mm ]
    fname : C:\Users\pchiocchio\AppData\Local\Temp\425a9a70-92a1-415b-a3e1-ac09acf5d6f2\a7a80449-cdd9-4cae-bb04-
    remark: 25 Year 12 Hour AES (Bloor, TRCA)
*
 ** CALIB NASHYD         0020  1  5.0    9.50    0.33  6.75  52.07 0.71   0.000
    [CN=95.0         ]
    [ N = 3.0:Tp 1.59]
*
    ADD [  0020+  0080]  0106  3  5.0  145.27    2.38  9.08  52.07  n/a   0.000
*
    READ STORM                 15.0
    [ Ptot= 73.10 mm ]
    fname : C:\Users\pchiocchio\AppData\Local\Temp\425a9a70-92a1-415b-a3e1-ac09acf5d6f2\a7a80449-cdd9-4cae-bb04-
    remark: 25 Year 12 Hour AES (Bloor, TRCA)
*
 ** CALIB NASHYD         0019  1  5.0   18.32    0.40  7.92  52.07 0.71   0.000
    [CN=95.0         ]
    [ N = 2.5:Tp 2.47]
*
    ADD [  0106+  0019]  0018  3  5.0  163.59    2.76  8.92  52.07  n/a   0.000
*
    CHANNEL[ 2:  0018]   0081  1  5.0  163.59    2.76  9.00  52.07  n/a   0.000
*
    READ STORM                 15.0
    [ Ptot= 73.10 mm ]
    fname : C:\Users\pchiocchio\AppData\Local\Temp\425a9a70-92a1-415b-a3e1-ac09acf5d6f2\a7a80449-cdd9-4cae-bb04-
    remark: 25 Year 12 Hour AES (Bloor, TRCA)
*
 ** CALIB NASHYD         0036  1  5.0    6.46    0.27  6.00  52.06 0.71   0.000
    [CN=95.0         ]
    [ N = 2.5:Tp 0.99]
*
    ADD [  0036+  0081]  0035  3  5.0  170.05    2.84  8.92  52.07  n/a   0.000
*
    CHANNEL[ 2:  0035]   0082  1  5.0  170.05    2.83  9.17  52.07  n/a   0.000
*
    READ STORM                 15.0
    [ Ptot= 73.10 mm ]
    fname : C:\Users\pchiocchio\AppData\Local\Temp\425a9a70-92a1-415b-a3e1-ac09acf5d6f2\a7a80449-cdd9-4cae-bb04-
    remark: 25 Year 12 Hour AES (Bloor, TRCA)
*
 ** CALIB NASHYD         0044  1  5.0   24.38    0.34 10.00  52.07 0.71   0.000
    [CN=95.0         ]
    [ N = 2.5:Tp 4.29]
*
    ADD [  0044+  0082]  0056  3  5.0  194.43    3.16  9.17  52.07  n/a   0.000
*
    CHANNEL[ 2:  0056]   0083  1  5.0  194.43    3.16  9.42  52.07  n/a   0.000
*
    READ STORM                 15.0
    [ Ptot= 73.10 mm ]
    fname : C:\Users\pchiocchio\AppData\Local\Temp\425a9a70-92a1-415b-a3e1-ac09acf5d6f2\a7a80449-cdd9-4cae-bb04-
    remark: 25 Year 12 Hour AES (Bloor, TRCA)
*
 ** CALIB NASHYD         0043  1  5.0   10.09    0.48  5.75  52.06 0.71   0.000
    [CN=95.0         ]
    [ N = 2.5:Tp 0.81]
*
    READ STORM                 15.0
    [ Ptot= 73.10 mm ]
    fname : C:\Users\pchiocchio\AppData\Local\Temp\425a9a70-92a1-415b-a3e1-ac09acf5d6f2\a7a80449-cdd9-4cae-bb04-
    remark: 25 Year 12 Hour AES (Bloor, TRCA)
*
 ** CALIB NASHYD         0045  1  5.0    5.34    0.32  5.50  52.04 0.71   0.000
    [CN=95.0         ]
    [ N = 2.5:Tp 0.56]
*
    ADD [  0043+  0045]  0086  3  5.0   15.43    0.78  5.67  52.05  n/a   0.000
*
    ADD [  0086+  0083]  0086  1  5.0  209.86    3.27  9.17  52.07  n/a   0.000
*
    CHANNEL[ 2:  0086]   0085  1  5.0  209.86    3.26  9.33  52.07  n/a   0.000
*
    READ STORM                 15.0
    [ Ptot= 73.10 mm ]
    fname : C:\Users\pchiocchio\AppData\Local\Temp\425a9a70-92a1-415b-a3e1-ac09acf5d6f2\a7a80449-cdd9-4cae-bb04-
```

```
    remark: 25 Year 12 Hour AES (Bloor, TRCA)
*
 ** CALIB NASHYD         0017  1  5.0    7.10    0.42  5.50  52.05 0.71   0.000
    [CN=95.0         ]
    [ N = 2.5:Tp 0.58]
*
    CHANNEL[ 2:  0017]   0084  1  5.0    7.10    0.33  6.00  52.02  n/a   0.000
*
    READ STORM                 15.0
    [ Ptot= 73.10 mm ]
    fname : C:\Users\pchiocchio\AppData\Local\Temp\425a9a70-92a1-415b-a3e1-ac09acf5d6f2\a7a80449-cdd9-4cae-bb04-
    remark: 25 Year 12 Hour AES (Bloor, TRCA)
*
 ** CALIB NASHYD         0042  1  5.0   33.34    1.23  6.33  52.07 0.71   0.000
    [CN=95.0         ]
    [ N = 2.5:Tp 1.21]
*
    READ STORM                 15.0
    [ Ptot= 73.10 mm ]
    fname : C:\Users\pchiocchio\AppData\Local\Temp\425a9a70-92a1-415b-a3e1-ac09acf5d6f2\a7a80449-cdd9-4cae-bb04-
    remark: 25 Year 12 Hour AES (Bloor, TRCA)
*
 ** CALIB NASHYD         0046  1  5.0   75.42    1.76  7.75  52.07 0.71   0.000
    [CN=95.0         ]
    [ N = 2.5:Tp 2.29]
*
    ADD [  0042+  0046]  0055  3  5.0  108.76    2.79  7.00  52.07  n/a   0.000
*
    ADD [  0055+  0084]  0055  1  5.0  115.86    3.04  6.83  52.06  n/a   0.000
*
    ADD [  0055+  0085]  0055  3  5.0  325.72    5.61  8.25  52.07  n/a   0.000
*
    CHANNEL[ 2:  0055]   0087  1  5.0  325.72    5.60  8.42  52.07  n/a   0.000
*
    READ STORM                 15.0
    [ Ptot= 73.10 mm ]
    fname : C:\Users\pchiocchio\AppData\Local\Temp\425a9a70-92a1-415b-a3e1-ac09acf5d6f2\a7a80449-cdd9-4cae-bb04-
    remark: 25 Year 12 Hour AES (Bloor, TRCA)
*
 ** CALIB NASHYD         0006  1  5.0   22.56    0.63  7.00  50.20 0.69   0.000
    [CN=94.0         ]
    [ N = 2.5:Tp 1.70]
*
    CHANNEL[ 2:  0006]   0091  1  5.0   22.56    0.63  7.17  50.20  n/a   0.000
*
    READ STORM                 15.0
    [ Ptot= 73.10 mm ]
    fname : C:\Users\pchiocchio\AppData\Local\Temp\425a9a70-92a1-415b-a3e1-ac09acf5d6f2\a7a80449-cdd9-4cae-bb04-
    remark: 25 Year 12 Hour AES (Bloor, TRCA)
*
 ** CALIB NASHYD         0008  1  5.0    6.20    0.27  5.83  50.19 0.69   0.000
    [CN=94.0         ]
    [ N = 2.5:Tp 0.85]
*
    ADD [  0008+  0091]  0011  3  5.0   28.76    0.84  6.58  50.20  n/a   0.000
*
    CHANNEL[ 2:  0011]   0092  1  5.0   28.76    0.83  6.75  50.20  n/a   0.000
*
    READ STORM                 15.0
    [ Ptot= 73.10 mm ]
    fname : C:\Users\pchiocchio\AppData\Local\Temp\425a9a70-92a1-415b-a3e1-ac09acf5d6f2\a7a80449-cdd9-4cae-bb04-
    remark: 25 Year 12 Hour AES (Bloor, TRCA)
*
 ** CALIB NASHYD         0038  1  5.0    7.23    0.24  6.58  50.20 0.69   0.000
    [CN=94.0         ]
    [ N = 2.5:Tp 1.35]
*
    ADD [  0038+  0092]  0052  3  5.0   35.99    1.07  6.75  50.20  n/a   0.000
*
    READ STORM                 15.0
    [ Ptot= 73.10 mm ]
    fname : C:\Users\pchiocchio\AppData\Local\Temp\425a9a70-92a1-415b-a3e1-ac09acf5d6f2\a7a80449-cdd9-4cae-bb04-
    remark: 25 Year 12 Hour AES (Bloor, TRCA)
*
 ** CALIB NASHYD         0007  1  5.0    1.34    0.09  5.33  50.13 0.69   0.000
    [CN=94.0         ]
    [ N = 2.5:Tp 0.36]
*
    CHANNEL[ 2:  0007]   0089  1  5.0    1.34    0.07  5.67  50.06  n/a   0.000
*
    READ STORM                 15.0
    [ Ptot= 73.10 mm ]
    fname : C:\Users\pchiocchio\AppData\Local\Temp\425a9a70-92a1-415b-a3e1-ac09acf5d6f2\a7a80449-cdd9-4cae-bb04-
    remark: 25 Year 12 Hour AES (Bloor, TRCA)
*
 ** CALIB NASHYD         0009  1  5.0    5.08    0.21  6.00  50.19 0.69   0.000
    [CN=94.0         ]
    [ N = 2.5:Tp 0.94]
*
    ADD [  0089+  0009]  0010  3  5.0    6.42    0.28  5.83  50.17  n/a   0.000
*
    READ STORM                 15.0
    [ Ptot= 73.10 mm ]
    fname : C:\Users\pchiocchio\AppData\Local\Temp\425a9a70-92a1-415b-a3e1-ac09acf5d6f2\a7a80449-cdd9-4cae-bb04-
    remark: 25 Year 12 Hour AES (Bloor, TRCA)
```

```
*
 ** CALIB NASHYD         0100  1  5.0   14.67    0.32  6.92  36.89 0.50   0.000
    [CN=85.0         ]
    [ N = 2.5:Tp 1.53]
*
    READ STORM                 15.0
    [ Ptot= 73.10 mm ]
    fname : C:\Users\pchiocchio\AppData\Local\Temp\425a9a70-92a1-415b-a3e1-ac09acf5d6f2\a7a80449-cdd9-4cae-bb04-
    remark: 25 Year 12 Hour AES (Bloor, TRCA)
*
 ** CALIB NASHYD         0107  1  5.0    0.88    0.02  6.42  36.89 0.50   0.000
    [CN=85.0         ]
    [ N = 2.5:Tp 1.12]
*
    ADD [  0100+  0107]  0109  3  5.0   15.55    0.34  6.92  36.89  n/a   0.000
*
    ADD [  0010+  0109]  0108  3  5.0   21.97    0.58  6.33  40.77  n/a   0.000
*
    CHANNEL[ 2:  0108]   0094  1  5.0   21.97    0.56  6.67  40.77  n/a   0.000
*
    READ STORM                 15.0
    [ Ptot= 73.10 mm ]
    fname : C:\Users\pchiocchio\AppData\Local\Temp\425a9a70-92a1-415b-a3e1-ac09acf5d6f2\a7a80449-cdd9-4cae-bb04-
    remark: 25 Year 12 Hour AES (Bloor, TRCA)
*
 ** CALIB NASHYD         0037  1  5.0    9.00    0.25  7.00  50.20 0.69   0.000
    [CN=94.0         ]
    [ N = 2.5:Tp 1.70]
*
    ADD [  0037+  0094]  0053  3  5.0   30.97    0.81  6.75  43.51  n/a   0.000
*
    READ STORM                 15.0
    [ Ptot= 73.10 mm ]
    fname : C:\Users\pchiocchio\AppData\Local\Temp\425a9a70-92a1-415b-a3e1-ac09acf5d6f2\a7a80449-cdd9-4cae-bb04-
    remark: 25 Year 12 Hour AES (Bloor, TRCA)
*
 ** CALIB NASHYD         0013  1  5.0    7.42    0.26  6.42  50.20 0.69   0.000
    [CN=94.0         ]
    [ N = 2.5:Tp 1.22]
*
    READ STORM                 15.0
    [ Ptot= 73.10 mm ]
    fname : C:\Users\pchiocchio\AppData\Local\Temp\425a9a70-92a1-415b-a3e1-ac09acf5d6f2\a7a80449-cdd9-4cae-bb04-
    remark: 25 Year 12 Hour AES (Bloor, TRCA)
*
 ** CALIB NASHYD         0014  1  5.0    4.74    0.21  5.92  50.19 0.69   0.000
    [CN=94.0         ]
    [ N = 2.5:Tp 0.87]
*
    READ STORM                 15.0
    [ Ptot= 73.10 mm ]
    fname : C:\Users\pchiocchio\AppData\Local\Temp\425a9a70-92a1-415b-a3e1-ac09acf5d6f2\a7a80449-cdd9-4cae-bb04-
    remark: 25 Year 12 Hour AES (Bloor, TRCA)
*
 ** CALIB NASHYD         0015  1  5.0    7.40    0.25  6.50  50.20 0.69   0.000
    [CN=94.0         ]
    [ N = 2.5:Tp 1.28]
*
    READ STORM                 15.0
    [ Ptot= 73.10 mm ]
    fname : C:\Users\pchiocchio\AppData\Local\Temp\425a9a70-92a1-415b-a3e1-ac09acf5d6f2\a7a80449-cdd9-4cae-bb04-
    remark: 25 Year 12 Hour AES (Bloor, TRCA)
*
 ** CALIB NASHYD         0105  1  5.0    6.60    0.22  6.50  50.20 0.69   0.000
    [CN=94.0         ]
    [ N = 2.5:Tp 1.28]
*
    ADD [  0105+  0013]  0012  3  5.0   14.02    0.48  6.42  50.20  n/a   0.000
*
    ADD [  0012+  0014]  0012  1  5.0   18.76    0.68  6.25  50.20  n/a   0.000
*
    ADD [  0012+  0015]  0012  3  5.0   26.16    0.93  6.33  50.20  n/a   0.000
*
    CHANNEL[ 2:  0012]   0093  1  5.0   26.16    0.92  6.50  50.20  n/a   0.000
*
    READ STORM                 15.0
    [ Ptot= 73.10 mm ]
    fname : C:\Users\pchiocchio\AppData\Local\Temp\425a9a70-92a1-415b-a3e1-ac09acf5d6f2\a7a80449-cdd9-4cae-bb04-
    remark: 25 Year 12 Hour AES (Bloor, TRCA)
*
 ** CALIB NASHYD         0039  1  5.0   13.25    0.43  6.58  50.20 0.69   0.000
    [CN=94.0         ]
    [ N = 2.5:Tp 1.35]
*
    ADD [  0039+  0093]  0051  3  5.0   39.41    1.35  6.50  50.20  n/a   0.000
*
    READ STORM                 15.0
    [ Ptot= 73.10 mm ]
    fname : C:\Users\pchiocchio\AppData\Local\Temp\425a9a70-92a1-415b-a3e1-ac09acf5d6f2\a7a80449-cdd9-4cae-bb04-
    remark: 25 Year 12 Hour AES (Bloor, TRCA)
*
 ** CALIB NASHYD         0040  1  5.0    7.26    0.25  6.42  50.20 0.69   0.000
    [CN=94.0         ]
    [ N = 2.5:Tp 1.23]
*
```

```
    READ STORM                 15.0
    [ Ptot= 73.10 mm ]
    fname : C:\Users\pchiocchio\AppData\Local\Temp\425a9a70-92a1-415b-a3e1-ac09acf5d6f2\a7a80449-cdd9-4cae-bb04-
    remark: 25 Year 12 Hour AES (Bloor, TRCA)
*
 ** CALIB NASHYD         0102  1  5.0    4.10    0.11  6.42  36.89 0.50   0.000
    [CN=85.0         ]
    [ N = 2.5:Tp 1.12]
*
    CHANNEL[ 2:  0102]   0101  1  5.0    4.10    0.10  6.75  36.89  n/a   0.000
*
    ADD [  0101+  0040]  0090  3  5.0   11.36    0.35  6.50  45.39  n/a   0.000
*
    ADD [  0090+  0051]  0090  1  5.0   50.77    1.71  6.50  49.12  n/a   0.000
*
    ADD [  0090+  0052]  0090  3  5.0   86.76    2.77  6.58  49.57  n/a   0.000
*
    ADD [  0090+  0053]  0090  1  5.0  117.73    3.58  6.67  47.97  n/a   0.000
*
    CHANNEL[ 2:  0090]   0095  1  5.0  117.73    3.56  6.75  47.97  n/a   0.000
*
    READ STORM                 15.0
    [ Ptot= 73.10 mm ]
    fname : C:\Users\pchiocchio\AppData\Local\Temp\425a9a70-92a1-415b-a3e1-ac09acf5d6f2\a7a80449-cdd9-4cae-bb04-
    remark: 25 Year 12 Hour AES (Bloor, TRCA)
*
 ** CALIB NASHYD         0041  1  5.0   12.70    0.48  6.25  50.20 0.69   0.000
    [CN=94.0         ]
    [ N = 2.5:Tp 1.08]
*
    ADD [  0041+  0095]  0050  3  5.0  130.43    4.01  6.67  48.19  n/a   0.000
*
    READ STORM                 15.0
    [ Ptot= 73.10 mm ]
    fname : C:\Users\pchiocchio\AppData\Local\Temp\425a9a70-92a1-415b-a3e1-ac09acf5d6f2\a7a80449-cdd9-4cae-bb04-
    remark: 25 Year 12 Hour AES (Bloor, TRCA)
*
 ** CALIB NASHYD         0047  1  5.0   71.95    1.83  7.42  52.07 0.71   0.000
    [CN=95.0         ]
    [ N = 2.5:Tp 2.04]
*
    ADD [  0047+  0050]  0054  3  5.0  202.38    5.75  6.83  49.57  n/a   0.000
*
    ADD [  0054+  0087]  0054  1  5.0  528.10   10.72  7.33  51.11  n/a   0.000
*
    CHANNEL[ 2:  0054]   0088  1  5.0  528.10   10.71  7.50  51.11  n/a   0.000
*
    READ STORM                 15.0
    [ Ptot= 73.10 mm ]
    fname : C:\Users\pchiocchio\AppData\Local\Temp\425a9a70-92a1-415b-a3e1-ac09acf5d6f2\a7a80449-cdd9-4cae-bb04-
    remark: 25 Year 12 Hour AES (Bloor, TRCA)
*
 ** CALIB NASHYD         0048  1  5.0   34.24    1.37  5.75  43.59 0.60   0.000
    [CN=90.0         ]
    [ N = 2.5:Tp 0.77]
*
    ADD [  0048+  0088]  0049  3  5.0  562.34   11.43  7.25  50.65  n/a   0.000
*
```

```
==========================================================================================

       V    V   I    SSSSS  U   U    A    L              (v 6.2.2001)
       V    V   I    SS     U   U   A A   L
        V  V    I     SS    U   U  AAAAA  L
        V  V    I      SS   U   U  A   A  L
         VV     I    SSSSS  UUUUU  A   A  LLLLL

        OOO   TTTTT  TTTTT  H   H  Y   Y  M   M   OOO    TM
       O   O    T      T    H   H   Y Y   MM MM  O   O
       O   O    T      T    H   H    Y    M   M  O   O
        OOO     T      T    H   H    Y    M   M   OOO
Developed and Distributed by Smart City Water Inc
Copyright 2007 - 2020 Smart City Water Inc
All rights reserved.


                  *****  S U M M A R Y   O U T P U T  *****


  Input   filename: C:\Program Files (x86)\Visual OTTHYMO 6.2\VO2\voin.dat
  Output  filename: C:\Users\pchiocchio\AppData\Local\Civica\VH5\d59fad6f-510d-48b8-a35a-1bee91f156cc\f208571f-6e3a-4c5a-a6ab-
eeec30c4ee59\s
  Summary filename: C:\Users\pchiocchio\AppData\Local\Civica\VH5\d59fad6f-510d-48b8-a35a-1bee91f156cc\f208571f-6e3a-4c5a-a6ab-
eeec30c4ee59\s


DATE: 02/02/2021                          TIME: 05:09:14

USER:


COMMENTS: ____________________________________________________________


  ************************************************
  ** SIMULATION : 50 - Year (6hr AES)           **
  ************************************************

  W/E COMMAND             HYD ID   DT    AREA  ' Qpeak Tpeak   R.V. R.C.   Qbase
                                  min     ha   '  cms   hrs     mm          cms

      START @  0.00 hrs
      --------------------
    READ STORM                 15.0
    [ Ptot= 73.00 mm ]
    fname : C:\Users\pchiocchio\AppData\Local\Temp\425a9a70-92a1-415b-a3e1-ac09acf5d6f2\420cc210-d6a1-495b-8e4a-
    remark: 50 Year 6 Hour AES (Bloor, TRCA)
*
 ** CALIB NASHYD         0022  1  5.0    1.47    0.21  2.75  42.38 0.58   0.000
    [CN=90.0         ]
    [ N = 3.0:Tp 0.10]
*
    READ STORM                 15.0
    [ Ptot= 73.00 mm ]
    fname : C:\Users\pchiocchio\AppData\Local\Temp\425a9a70-92a1-415b-a3e1-ac09acf5d6f2\420cc210-d6a1-495b-8e4a-
    remark: 50 Year 6 Hour AES (Bloor, TRCA)
*
 ** CALIB NASHYD         0023  1  5.0    6.75    0.75  2.83  43.48 0.60   0.000
    [CN=90.0         ]
    [ N = 3.0:Tp 0.26]
*
    READ STORM                 15.0
    [ Ptot= 73.00 mm ]
    fname : C:\Users\pchiocchio\AppData\Local\Temp\425a9a70-92a1-415b-a3e1-ac09acf5d6f2\420cc210-d6a1-495b-8e4a-
    remark: 50 Year 6 Hour AES (Bloor, TRCA)
*
 ** CALIB NASHYD         0024  1  5.0    4.86    0.47  2.92  43.50 0.60   0.000
    [CN=90.0         ]
    [ N = 3.0:Tp 0.34]
*
    READ STORM                 15.0
    [ Ptot= 73.00 mm ]
    fname : C:\Users\pchiocchio\AppData\Local\Temp\425a9a70-92a1-415b-a3e1-ac09acf5d6f2\420cc210-d6a1-495b-8e4a-
    remark: 50 Year 6 Hour AES (Bloor, TRCA)
*
 ** CALIB NASHYD         0025  1  5.0    5.72    0.67  2.83  43.46 0.60   0.000
    [CN=90.0         ]
    [ N = 3.0:Tp 0.23]
*
    ADD [  0022+  0023]  0026  3  5.0    8.22    0.92  2.75  43.28  n/a   0.000
*
    ADD [  0026+  0024]  0026  1  5.0   13.08    1.34  2.83  43.36  n/a   0.000
*
    ADD [  0026+  0025]  0026  3  5.0   18.80    2.01  2.83  43.39  n/a   0.000
*
    READ STORM                 15.0
    [ Ptot= 73.00 mm ]
    fname : C:\Users\pchiocchio\AppData\Local\Temp\425a9a70-92a1-415b-a3e1-ac09acf5d6f2\420cc210-d6a1-495b-8e4a-
    remark: 50 Year 6 Hour AES (Bloor, TRCA)
*
 ** CALIB NASHYD         0028  1  5.0    2.78    0.32  2.83  43.46 0.60   0.000
    [CN=90.0         ]
    [ N = 3.0:Tp 0.23]
```

```
*
    READ STORM                 15.0
    [ Ptot= 73.00 mm ]
    fname : C:\Users\pchiocchio\AppData\Local\Temp\425a9a70-92a1-415b-a3e1-ac09acf5d6f2\420cc210-d6a1-495b-8e4a-
    remark: 50 Year 6 Hour AES (Bloor, TRCA)
*
 ** CALIB NASHYD         0029  1  5.0    9.39    1.28  2.75  43.26 0.59   0.000
    [CN=90.0         ]
    [ N = 3.0:Tp 0.15]
*
    READ STORM                 15.0
    [ Ptot= 73.00 mm ]
    fname : C:\Users\pchiocchio\AppData\Local\Temp\425a9a70-92a1-415b-a3e1-ac09acf5d6f2\420cc210-d6a1-495b-8e4a-
    remark: 50 Year 6 Hour AES (Bloor, TRCA)
*
 ** CALIB NASHYD         0030  1  5.0    1.69    0.24  2.75  42.38 0.58   0.000
    [CN=90.0         ]
    [ N = 3.0:Tp 0.10]
*
    READ STORM                 15.0
    [ Ptot= 73.00 mm ]
    fname : C:\Users\pchiocchio\AppData\Local\Temp\425a9a70-92a1-415b-a3e1-ac09acf5d6f2\420cc210-d6a1-495b-8e4a-
    remark: 50 Year 6 Hour AES (Bloor, TRCA)
*
 ** CALIB NASHYD         0031  1  5.0    2.93    0.41  2.75  43.08 0.59   0.000
    [CN=90.0         ]
    [ N = 3.0:Tp 0.13]
*
    READ STORM                 15.0
    [ Ptot= 73.00 mm ]
    fname : C:\Users\pchiocchio\AppData\Local\Temp\425a9a70-92a1-415b-a3e1-ac09acf5d6f2\420cc210-d6a1-495b-8e4a-
    remark: 50 Year 6 Hour AES (Bloor, TRCA)
*
 ** CALIB NASHYD         0032  1  5.0    4.99    0.67  2.75  43.31 0.59   0.000
    [CN=90.0         ]
    [ N = 3.0:Tp 0.16]
*
    ADD [  0029+  0030]  0033  3  5.0   11.08    1.52  2.75  43.12  n/a   0.000
*
    ADD [  0033+  0031]  0033  1  5.0   14.01    1.93  2.75  43.11  n/a   0.000
*
    ADD [  0033+  0032]  0033  3  5.0   19.00    2.60  2.75  43.17  n/a   0.000
*
    READ STORM                 15.0
    [ Ptot= 73.00 mm ]
    fname : C:\Users\pchiocchio\AppData\Local\Temp\425a9a70-92a1-415b-a3e1-ac09acf5d6f2\420cc210-d6a1-495b-8e4a-
    remark: 50 Year 6 Hour AES (Bloor, TRCA)
*
 ** CALIB NASHYD         0001  1  5.0    1.24    0.09  3.25  51.95 0.71   0.000
    [CN=95.0         ]
    [ N = 2.5:Tp 0.59]
*
    READ STORM                 15.0
    [ Ptot= 73.00 mm ]
    fname : C:\Users\pchiocchio\AppData\Local\Temp\425a9a70-92a1-415b-a3e1-ac09acf5d6f2\420cc210-d6a1-495b-8e4a-
    remark: 50 Year 6 Hour AES (Bloor, TRCA)
*
 ** CALIB NASHYD         0002  1  5.0    1.96    0.12  3.50  51.96 0.71   0.000
    [CN=95.0         ]
    [ N = 2.5:Tp 0.77]
*
    READ STORM                 15.0
    [ Ptot= 73.00 mm ]
    fname : C:\Users\pchiocchio\AppData\Local\Temp\425a9a70-92a1-415b-a3e1-ac09acf5d6f2\420cc210-d6a1-495b-8e4a-
    remark: 50 Year 6 Hour AES (Bloor, TRCA)
*
 ** CALIB NASHYD         0004  1  5.0   40.84    1.21  4.92  51.97 0.71   0.000
    [CN=95.0         ]
    [ N = 2.5:Tp 2.02]
*
    ADD [  0001+  0002]  0096  3  5.0    3.20    0.21  3.42  51.96  n/a   0.000
*
    ADD [  0096+  0004]  0096  1  5.0   44.04    1.30  4.75  51.97  n/a   0.000
*
    CHANNEL[ 2:  0096]   0066  1  5.0   44.04    1.18  5.58  51.97  n/a   0.000
*
    READ STORM                 15.0
    [ Ptot= 73.00 mm ]
    fname : C:\Users\pchiocchio\AppData\Local\Temp\425a9a70-92a1-415b-a3e1-ac09acf5d6f2\420cc210-d6a1-495b-8e4a-
    remark: 50 Year 6 Hour AES (Bloor, TRCA)
*
 ** CALIB NASHYD         0005  1  5.0   34.73    0.52  7.33  51.97 0.71   0.000
    [CN=95.0         ]
    [ N = 2.5:Tp 4.29]
*
    ADD [  0005+  0066]  0003  3  5.0   78.77    1.64  5.92  51.97  n/a   0.000
*
    CHANNEL[ 2:  0003]   0078  1  5.0   78.77    1.60  6.33  51.97  n/a   0.000
*
    READ STORM                 15.0
    [ Ptot= 73.00 mm ]
    fname : C:\Users\pchiocchio\AppData\Local\Temp\425a9a70-92a1-415b-a3e1-ac09acf5d6f2\420cc210-d6a1-495b-8e4a-
    remark: 50 Year 6 Hour AES (Bloor, TRCA)
*
 ** CALIB NASHYD         0021  1  5.0    2.77    0.19  3.33  51.96 0.71   0.000
```

```
    [CN=95.0         ]
    [ N = 2.5:Tp 0.67]
*
    READ STORM                 15.0
    [ Ptot= 73.00 mm ]
    fname : C:\Users\pchiocchio\AppData\Local\Temp\425a9a70-92a1-415b-a3e1-ac09acf5d6f2\420cc210-d6a1-495b-8e4a-
    remark: 50 Year 6 Hour AES (Bloor, TRCA)
*
 ** CALIB NASHYD         0027  1  5.0   54.23    0.85  7.17  51.97 0.71   0.000
    [CN=95.0         ]
    [ N = 2.5:Tp 4.12]
*
    ADD [  0021+  0027]  0079  3  5.0   57.00    0.86  7.00  51.97  n/a   0.000
*
    ADD [  0079+  0078]  0079  1  5.0  135.77    2.45  6.50  51.97  n/a   0.000
*
    CHANNEL[ 2:  0079]   0080  1  5.0  135.77    2.44  6.75  51.97  n/a   0.000
*
    READ STORM                 15.0
    [ Ptot= 73.00 mm ]
    fname : C:\Users\pchiocchio\AppData\Local\Temp\425a9a70-92a1-415b-a3e1-ac09acf5d6f2\420cc210-d6a1-495b-8e4a-
    remark: 50 Year 6 Hour AES (Bloor, TRCA)
*
 ** CALIB NASHYD         0020  1  5.0    9.50    0.39  4.42  51.97 0.71   0.000
    [CN=95.0         ]
    [ N = 3.0:Tp 1.59]
*
    ADD [  0020+  0080]  0106  3  5.0  145.27    2.62  6.42  51.97  n/a   0.000
*
    READ STORM                 15.0
    [ Ptot= 73.00 mm ]
    fname : C:\Users\pchiocchio\AppData\Local\Temp\425a9a70-92a1-415b-a3e1-ac09acf5d6f2\420cc210-d6a1-495b-8e4a-
    remark: 50 Year 6 Hour AES (Bloor, TRCA)
*
 ** CALIB NASHYD         0019  1  5.0   18.32    0.46  5.42  51.97 0.71   0.000
    [CN=95.0         ]
    [ N = 2.5:Tp 2.47]
*
    ADD [  0106+  0019]  0018  3  5.0  163.59    3.04  6.33  51.97  n/a   0.000
*
    CHANNEL[ 2:  0018]   0081  1  5.0  163.59    3.04  6.33  51.97  n/a   0.000
*
    READ STORM                 15.0
    [ Ptot= 73.00 mm ]
    fname : C:\Users\pchiocchio\AppData\Local\Temp\425a9a70-92a1-415b-a3e1-ac09acf5d6f2\420cc210-d6a1-495b-8e4a-
    remark: 50 Year 6 Hour AES (Bloor, TRCA)
*
 ** CALIB NASHYD         0036  1  5.0    6.46    0.34  3.75  51.97 0.71   0.000
    [CN=95.0         ]
    [ N = 2.5:Tp 0.99]
*
    ADD [  0036+  0081]  0035  3  5.0  170.05    3.13  6.17  51.97  n/a   0.000
*
    CHANNEL[ 2:  0035]   0082  1  5.0  170.05    3.10  6.50  51.97  n/a   0.000
*
    READ STORM                 15.0
    [ Ptot= 73.00 mm ]
    fname : C:\Users\pchiocchio\AppData\Local\Temp\425a9a70-92a1-415b-a3e1-ac09acf5d6f2\420cc210-d6a1-495b-8e4a-
    remark: 50 Year 6 Hour AES (Bloor, TRCA)
*
 ** CALIB NASHYD         0044  1  5.0   24.38    0.37  7.33  51.97 0.71   0.000
    [CN=95.0         ]
    [ N = 2.5:Tp 4.29]
*
    ADD [  0044+  0082]  0056  3  5.0  194.43    3.46  6.58  51.97  n/a   0.000
*
    CHANNEL[ 2:  0056]   0083  1  5.0  194.43    3.45  6.75  51.97  n/a   0.000
*
    READ STORM                 15.0
    [ Ptot= 73.00 mm ]
    fname : C:\Users\pchiocchio\AppData\Local\Temp\425a9a70-92a1-415b-a3e1-ac09acf5d6f2\420cc210-d6a1-495b-8e4a-
    remark: 50 Year 6 Hour AES (Bloor, TRCA)
*
 ** CALIB NASHYD         0043  1  5.0   10.09    0.60  3.50  51.96 0.71   0.000
    [CN=95.0         ]
    [ N = 2.5:Tp 0.81]
*
    READ STORM                 15.0
    [ Ptot= 73.00 mm ]
    fname : C:\Users\pchiocchio\AppData\Local\Temp\425a9a70-92a1-415b-a3e1-ac09acf5d6f2\420cc210-d6a1-495b-8e4a-
    remark: 50 Year 6 Hour AES (Bloor, TRCA)
*
 ** CALIB NASHYD         0045  1  5.0    5.34    0.41  3.25  51.95 0.71   0.000
    [CN=95.0         ]
    [ N = 2.5:Tp 0.56]
*
    ADD [  0043+  0045]  0086  3  5.0   15.43    1.00  3.42  51.96  n/a   0.000
*
    ADD [  0086+  0083]  0086  1  5.0  209.86    3.54  6.58  51.97  n/a   0.000
*
    CHANNEL[ 2:  0086]   0085  1  5.0  209.86    3.53  6.75  51.97  n/a   0.000
*
    READ STORM                 15.0
    [ Ptot= 73.00 mm ]
    fname : C:\Users\pchiocchio\AppData\Local\Temp\425a9a70-92a1-415b-a3e1-ac09acf5d6f2\420cc210-d6a1-495b-8e4a-
```

```
    remark: 50 Year 6 Hour AES (Bloor, TRCA)
*
 ** CALIB NASHYD         0017  1  5.0    7.10    0.54  3.25  51.95 0.71   0.000
    [CN=95.0         ]
    [ N = 2.5:Tp 0.58]
*
    CHANNEL[ 2:  0017]   0084  1  5.0    7.10    0.42  3.75  51.91  n/a   0.000
*
    READ STORM                 15.0
    [ Ptot= 73.00 mm ]
    fname : C:\Users\pchiocchio\AppData\Local\Temp\425a9a70-92a1-415b-a3e1-ac09acf5d6f2\420cc210-d6a1-495b-8e4a-
    remark: 50 Year 6 Hour AES (Bloor, TRCA)
*
 ** CALIB NASHYD         0042  1  5.0   33.34    1.49  4.08  51.97 0.71   0.000
    [CN=95.0         ]
    [ N = 2.5:Tp 1.21]
*
    READ STORM                 15.0
    [ Ptot= 73.00 mm ]
    fname : C:\Users\pchiocchio\AppData\Local\Temp\425a9a70-92a1-415b-a3e1-ac09acf5d6f2\420cc210-d6a1-495b-8e4a-
    remark: 50 Year 6 Hour AES (Bloor, TRCA)
*
 ** CALIB NASHYD         0046  1  5.0   75.42    2.00  5.25  51.97 0.71   0.000
    [CN=95.0         ]
    [ N = 2.5:Tp 2.29]
*
    ADD [  0042+  0046]  0055  3  5.0  108.76    3.27  4.58  51.97  n/a   0.000
*
    ADD [  0055+  0084]  0055  1  5.0  115.86    3.59  4.42  51.97  n/a   0.000
*
    ADD [  0055+  0085]  0055  3  5.0  325.72    6.22  5.50  51.97  n/a   0.000
*
    CHANNEL[ 2:  0055]   0087  1  5.0  325.72    6.20  5.67  51.97  n/a   0.000
*
    READ STORM                 15.0
    [ Ptot= 73.00 mm ]
    fname : C:\Users\pchiocchio\AppData\Local\Temp\425a9a70-92a1-415b-a3e1-ac09acf5d6f2\420cc210-d6a1-495b-8e4a-
    remark: 50 Year 6 Hour AES (Bloor, TRCA)
*
 ** CALIB NASHYD         0006  1  5.0   22.56    0.74  4.58  50.10 0.69   0.000
    [CN=94.0         ]
    [ N = 2.5:Tp 1.70]
*
    CHANNEL[ 2:  0006]   0091  1  5.0   22.56    0.74  4.75  50.10  n/a   0.000
*
    READ STORM                 15.0
    [ Ptot= 73.00 mm ]
    fname : C:\Users\pchiocchio\AppData\Local\Temp\425a9a70-92a1-415b-a3e1-ac09acf5d6f2\420cc210-d6a1-495b-8e4a-
    remark: 50 Year 6 Hour AES (Bloor, TRCA)
*
 ** CALIB NASHYD         0008  1  5.0    6.20    0.35  3.58  50.10 0.69   0.000
    [CN=94.0         ]
    [ N = 2.5:Tp 0.85]
*
    ADD [  0008+  0091]  0011  3  5.0   28.76    0.99  4.33  50.10  n/a   0.000
*
    CHANNEL[ 2:  0011]   0092  1  5.0   28.76    0.99  4.42  50.10  n/a   0.000
*
    READ STORM                 15.0
    [ Ptot= 73.00 mm ]
    fname : C:\Users\pchiocchio\AppData\Local\Temp\425a9a70-92a1-415b-a3e1-ac09acf5d6f2\420cc210-d6a1-495b-8e4a-
    remark: 50 Year 6 Hour AES (Bloor, TRCA)
*
 ** CALIB NASHYD         0038  1  5.0    7.23    0.29  4.25  50.10 0.69   0.000
    [CN=94.0         ]
    [ N = 2.5:Tp 1.35]
*
    ADD [  0038+  0092]  0052  3  5.0   35.99    1.27  4.42  50.10  n/a   0.000
*
    READ STORM                 15.0
    [ Ptot= 73.00 mm ]
    fname : C:\Users\pchiocchio\AppData\Local\Temp\425a9a70-92a1-415b-a3e1-ac09acf5d6f2\420cc210-d6a1-495b-8e4a-
    remark: 50 Year 6 Hour AES (Bloor, TRCA)
*
 ** CALIB NASHYD         0007  1  5.0    1.34    0.13  2.92  50.03 0.69   0.000
    [CN=94.0         ]
    [ N = 2.5:Tp 0.36]
*
    CHANNEL[ 2:  0007]   0089  1  5.0    1.34    0.10  3.42  49.94  n/a   0.000
*
    READ STORM                 15.0
    [ Ptot= 73.00 mm ]
    fname : C:\Users\pchiocchio\AppData\Local\Temp\425a9a70-92a1-415b-a3e1-ac09acf5d6f2\420cc210-d6a1-495b-8e4a-
    remark: 50 Year 6 Hour AES (Bloor, TRCA)
*
 ** CALIB NASHYD         0009  1  5.0    5.08    0.26  3.75  50.10 0.69   0.000
    [CN=94.0         ]
    [ N = 2.5:Tp 0.94]
*
    ADD [  0089+  0009]  0010  3  5.0    6.42    0.35  3.58  50.07  n/a   0.000
*
    READ STORM                 15.0
    [ Ptot= 73.00 mm ]
    fname : C:\Users\pchiocchio\AppData\Local\Temp\425a9a70-92a1-415b-a3e1-ac09acf5d6f2\420cc210-d6a1-495b-8e4a-
    remark: 50 Year 6 Hour AES (Bloor, TRCA)
```

```
*
 ** CALIB NASHYD         0100  1  5.0   14.67    0.38  4.50  36.81 0.50   0.000
    [CN=85.0         ]
    [ N = 2.5:Tp 1.53]
*
    READ STORM                 15.0
    [ Ptot= 73.00 mm ]
    fname : C:\Users\pchiocchio\AppData\Local\Temp\425a9a70-92a1-415b-a3e1-ac09acf5d6f2\420cc210-d6a1-495b-8e4a-
    remark: 50 Year 6 Hour AES (Bloor, TRCA)
*
 ** CALIB NASHYD         0107  1  5.0    0.88    0.03  4.00  36.80 0.50   0.000
    [CN=85.0         ]
    [ N = 2.5:Tp 1.12]
*
    ADD [  0100+  0107]  0109  3  5.0   15.55    0.41  4.50  36.81  n/a   0.000
*
    ADD [  0010+  0109]  0108  3  5.0   21.97    0.71  4.00  40.68  n/a   0.000
*
    CHANNEL[ 2:  0108]   0094  1  5.0   21.97    0.67  4.42  40.68  n/a   0.000
*
    READ STORM                 15.0
    [ Ptot= 73.00 mm ]
    fname : C:\Users\pchiocchio\AppData\Local\Temp\425a9a70-92a1-415b-a3e1-ac09acf5d6f2\420cc210-d6a1-495b-8e4a-
    remark: 50 Year 6 Hour AES (Bloor, TRCA)
*
 ** CALIB NASHYD         0037  1  5.0    9.00    0.30  4.58  50.10 0.69   0.000
    [CN=94.0         ]
    [ N = 2.5:Tp 1.70]
*
    ADD [  0037+  0094]  0053  3  5.0   30.97    0.97  4.50  43.42  n/a   0.000
*
    READ STORM                 15.0
    [ Ptot= 73.00 mm ]
    fname : C:\Users\pchiocchio\AppData\Local\Temp\425a9a70-92a1-415b-a3e1-ac09acf5d6f2\420cc210-d6a1-495b-8e4a-
    remark: 50 Year 6 Hour AES (Bloor, TRCA)
*
 ** CALIB NASHYD         0013  1  5.0    7.42    0.32  4.08  50.10 0.69   0.000
    [CN=94.0         ]
    [ N = 2.5:Tp 1.22]
*
    READ STORM                 15.0
    [ Ptot= 73.00 mm ]
    fname : C:\Users\pchiocchio\AppData\Local\Temp\425a9a70-92a1-415b-a3e1-ac09acf5d6f2\420cc210-d6a1-495b-8e4a-
    remark: 50 Year 6 Hour AES (Bloor, TRCA)
*
 ** CALIB NASHYD         0014  1  5.0    4.74    0.26  3.67  50.10 0.69   0.000
    [CN=94.0         ]
    [ N = 2.5:Tp 0.87]
*
    READ STORM                 15.0
    [ Ptot= 73.00 mm ]
    fname : C:\Users\pchiocchio\AppData\Local\Temp\425a9a70-92a1-415b-a3e1-ac09acf5d6f2\420cc210-d6a1-495b-8e4a-
    remark: 50 Year 6 Hour AES (Bloor, TRCA)
*
 ** CALIB NASHYD         0015  1  5.0    7.40    0.30  4.17  50.10 0.69   0.000
    [CN=94.0         ]
    [ N = 2.5:Tp 1.28]
*
    READ STORM                 15.0
    [ Ptot= 73.00 mm ]
    fname : C:\Users\pchiocchio\AppData\Local\Temp\425a9a70-92a1-415b-a3e1-ac09acf5d6f2\420cc210-d6a1-495b-8e4a-
    remark: 50 Year 6 Hour AES (Bloor, TRCA)
*
 ** CALIB NASHYD         0105  1  5.0    6.60    0.27  4.17  50.10 0.69   0.000
    [CN=94.0         ]
    [ N = 2.5:Tp 1.28]
*
    ADD [  0105+  0013]  0012  3  5.0   14.02    0.59  4.08  50.10  n/a   0.000
*
    ADD [  0012+  0014]  0012  1  5.0   18.76    0.83  3.92  50.10  n/a   0.000
*
    ADD [  0012+  0015]  0012  3  5.0   26.16    1.13  4.00  50.10  n/a   0.000
*
    CHANNEL[ 2:  0012]   0093  1  5.0   26.16    1.12  4.17  50.10  n/a   0.000
*
    READ STORM                 15.0
    [ Ptot= 73.00 mm ]
    fname : C:\Users\pchiocchio\AppData\Local\Temp\425a9a70-92a1-415b-a3e1-ac09acf5d6f2\420cc210-d6a1-495b-8e4a-
    remark: 50 Year 6 Hour AES (Bloor, TRCA)
*
 ** CALIB NASHYD         0039  1  5.0   13.25    0.52  4.25  50.10 0.69   0.000
    [CN=94.0         ]
    [ N = 2.5:Tp 1.35]
*
    ADD [  0039+  0093]  0051  3  5.0   39.41    1.65  4.17  50.10  n/a   0.000
*
    READ STORM                 15.0
    [ Ptot= 73.00 mm ]
    fname : C:\Users\pchiocchio\AppData\Local\Temp\425a9a70-92a1-415b-a3e1-ac09acf5d6f2\420cc210-d6a1-495b-8e4a-
    remark: 50 Year 6 Hour AES (Bloor, TRCA)
*
 ** CALIB NASHYD         0040  1  5.0    7.26    0.31  4.08  50.10 0.69   0.000
    [CN=94.0         ]
    [ N = 2.5:Tp 1.23]
*
```

```
    READ STORM                 15.0
    [ Ptot= 73.00 mm ]
    fname : C:\Users\pchiocchio\AppData\Local\Temp\425a9a70-92a1-415b-a3e1-ac09acf5d6f2\420cc210-d6a1-495b-8e4a-
    remark: 50 Year 6 Hour AES (Bloor, TRCA)
*
 ** CALIB NASHYD         0102  1  5.0    4.10    0.13  4.00  36.81 0.50   0.000
    [CN=85.0         ]
    [ N = 2.5:Tp 1.12]
*
    CHANNEL[ 2:  0102]   0101  1  5.0    4.10    0.13  4.42  36.81  n/a   0.000
*
    ADD [  0101+  0040]  0090  3  5.0   11.36    0.43  4.17  45.30  n/a   0.000
*
    ADD [  0090+  0051]  0090  1  5.0   50.77    2.08  4.17  49.03  n/a   0.000
*
    ADD [  0090+  0052]  0090  3  5.0   86.76    3.34  4.25  49.47  n/a   0.000
*
    ADD [  0090+  0053]  0090  1  5.0  117.73    4.30  4.33  47.88  n/a   0.000
*
    CHANNEL[ 2:  0090]   0095  1  5.0  117.73    4.28  4.42  47.88  n/a   0.000
*
    READ STORM                 15.0
    [ Ptot= 73.00 mm ]
    fname : C:\Users\pchiocchio\AppData\Local\Temp\425a9a70-92a1-415b-a3e1-ac09acf5d6f2\420cc210-d6a1-495b-8e4a-
    remark: 50 Year 6 Hour AES (Bloor, TRCA)
*
 ** CALIB NASHYD         0041  1  5.0   12.70    0.59  3.92  50.10 0.69   0.000
    [CN=94.0         ]
    [ N = 2.5:Tp 1.08]
*
    ADD [  0041+  0095]  0050  3  5.0  130.43    4.83  4.33  48.10  n/a   0.000
*
    READ STORM                 15.0
    [ Ptot= 73.00 mm ]
    fname : C:\Users\pchiocchio\AppData\Local\Temp\425a9a70-92a1-415b-a3e1-ac09acf5d6f2\420cc210-d6a1-495b-8e4a-
    remark: 50 Year 6 Hour AES (Bloor, TRCA)
*
 ** CALIB NASHYD         0047  1  5.0   71.95    2.11  5.00  51.97 0.71   0.000
    [CN=95.0         ]
    [ N = 2.5:Tp 2.04]
*
    ADD [  0047+  0050]  0054  3  5.0  202.38    6.84  4.50  49.47  n/a   0.000
*
    ADD [  0054+  0087]  0054  1  5.0  528.10   12.52  4.83  51.01  n/a   0.000
*
    CHANNEL[ 2:  0054]   0088  1  5.0  528.10   12.47  5.00  51.01  n/a   0.000
*
    READ STORM                 15.0
    [ Ptot= 73.00 mm ]
    fname : C:\Users\pchiocchio\AppData\Local\Temp\425a9a70-92a1-415b-a3e1-ac09acf5d6f2\420cc210-d6a1-495b-8e4a-
    remark: 50 Year 6 Hour AES (Bloor, TRCA)
*
 ** CALIB NASHYD         0048  1  5.0   34.24    1.75  3.50  43.50 0.60   0.000
    [CN=90.0         ]
    [ N = 2.5:Tp 0.77]
*
    ADD [  0048+  0088]  0049  3  5.0  562.34   13.37  4.75  50.56  n/a   0.000
*
 FINISH

==========================================================================================================
```

```
==========================================================================================

       V    V   I    SSSSS  U   U    A    L              (v 6.2.2001)
       V    V   I    SS     U   U   A A   L
        V  V    I     SS    U   U  AAAAA  L
        V  V    I      SS   U   U  A   A  L
         VV     I    SSSSS  UUUUU  A   A  LLLLL

        OOO   TTTTT  TTTTT  H   H  Y   Y  M   M   OOO    TM
       O   O    T      T    H   H   Y Y   MM MM  O   O
       O   O    T      T    H   H    Y    M   M  O   O
        OOO     T      T    H   H    Y    M   M   OOO
Developed and Distributed by Smart City Water Inc
Copyright 2007 - 2020 Smart City Water Inc
All rights reserved.


                  *****  S U M M A R Y   O U T P U T  *****


  Input   filename: C:\Program Files (x86)\Visual OTTHYMO 6.2\VO2\voin.dat
  Output  filename: C:\Users\pchiocchio\AppData\Local\Civica\VH5\d59fad6f-510d-48b8-a35a-1bee91f156cc\c2588a32-ad24-494c-9457-
9d442406bbc5\s
  Summary filename: C:\Users\pchiocchio\AppData\Local\Civica\VH5\d59fad6f-510d-48b8-a35a-1bee91f156cc\c2588a32-ad24-494c-9457-
9d442406bbc5\s


DATE: 02/02/2021                          TIME: 05:09:13

USER:


COMMENTS: ____________________________________________________________


  ************************************************
  ** SIMULATION : 50 - Year (12hr AES)          **
  ************************************************

  W/E COMMAND             HYD ID   DT    AREA  ' Qpeak Tpeak   R.V. R.C.   Qbase
                                  min     ha   '  cms   hrs     mm          cms

      START @  0.00 hrs
      --------------------
    READ STORM                 15.0
    [ Ptot= 80.82 mm ]
    fname : C:\Users\pchiocchio\AppData\Local\Temp\425a9a70-92a1-415b-a3e1-ac09acf5d6f2\9d9aed76-16fc-4a0a-9fef-
    remark: 50 Year 12 Hour AES (Bloor, TRCA)
*
 ** CALIB NASHYD         0022  1  5.0    1.47    0.12  5.25  49.32 0.61   0.000
    [CN=90.0         ]
    [ N = 3.0:Tp 0.10]
*
    READ STORM                 15.0
    [ Ptot= 80.82 mm ]
    fname : C:\Users\pchiocchio\AppData\Local\Temp\425a9a70-92a1-415b-a3e1-ac09acf5d6f2\9d9aed76-16fc-4a0a-9fef-
    remark: 50 Year 12 Hour AES (Bloor, TRCA)
*
 ** CALIB NASHYD         0023  1  5.0    6.75    0.54  5.25  50.61 0.63   0.000
    [CN=90.0         ]
    [ N = 3.0:Tp 0.26]
*
    READ STORM                 15.0
    [ Ptot= 80.82 mm ]
    fname : C:\Users\pchiocchio\AppData\Local\Temp\425a9a70-92a1-415b-a3e1-ac09acf5d6f2\9d9aed76-16fc-4a0a-9fef-
    remark: 50 Year 12 Hour AES (Bloor, TRCA)
*
 ** CALIB NASHYD         0024  1  5.0    4.86    0.37  5.33  50.63 0.63   0.000
    [CN=90.0         ]
    [ N = 3.0:Tp 0.34]
*
    READ STORM                 15.0
    [ Ptot= 80.82 mm ]
    fname : C:\Users\pchiocchio\AppData\Local\Temp\425a9a70-92a1-415b-a3e1-ac09acf5d6f2\9d9aed76-16fc-4a0a-9fef-
    remark: 50 Year 12 Hour AES (Bloor, TRCA)
*
 ** CALIB NASHYD         0025  1  5.0    5.72    0.47  5.25  50.58 0.63   0.000
    [CN=90.0         ]
    [ N = 3.0:Tp 0.23]
*
    ADD [  0022+  0023]  0026  3  5.0    8.22    0.67  5.25  50.38  n/a   0.000
*
    ADD [  0026+  0024]  0026  1  5.0   13.08    1.03  5.25  50.47  n/a   0.000
*
    ADD [  0026+  0025]  0026  3  5.0   18.80    1.50  5.25  50.50  n/a   0.000
*
    READ STORM                 15.0
    [ Ptot= 80.82 mm ]
    fname : C:\Users\pchiocchio\AppData\Local\Temp\425a9a70-92a1-415b-a3e1-ac09acf5d6f2\9d9aed76-16fc-4a0a-9fef-
    remark: 50 Year 12 Hour AES (Bloor, TRCA)
*
 ** CALIB NASHYD         0028  1  5.0    2.78    0.23  5.25  50.58 0.63   0.000
    [CN=90.0         ]
    [ N = 3.0:Tp 0.23]
```

```
*
    READ STORM                 15.0
    [ Ptot= 80.82 mm ]
    fname : C:\Users\pchiocchio\AppData\Local\Temp\425a9a70-92a1-415b-a3e1-ac09acf5d6f2\9d9aed76-16fc-4a0a-9fef-
    remark: 50 Year 12 Hour AES (Bloor, TRCA)
*
 ** CALIB NASHYD         0029  1  5.0    9.39    0.80  5.25  50.35 0.62   0.000
    [CN=90.0         ]
    [ N = 3.0:Tp 0.15]
*
    READ STORM                 15.0
    [ Ptot= 80.82 mm ]
    fname : C:\Users\pchiocchio\AppData\Local\Temp\425a9a70-92a1-415b-a3e1-ac09acf5d6f2\9d9aed76-16fc-4a0a-9fef-
    remark: 50 Year 12 Hour AES (Bloor, TRCA)
*
 ** CALIB NASHYD         0030  1  5.0    1.69    0.14  5.25  49.32 0.61   0.000
    [CN=90.0         ]
    [ N = 3.0:Tp 0.10]
*
    READ STORM                 15.0
    [ Ptot= 80.82 mm ]
    fname : C:\Users\pchiocchio\AppData\Local\Temp\425a9a70-92a1-415b-a3e1-ac09acf5d6f2\9d9aed76-16fc-4a0a-9fef-
    remark: 50 Year 12 Hour AES (Bloor, TRCA)
*
 ** CALIB NASHYD         0031  1  5.0    2.93    0.25  5.25  50.14 0.62   0.000
    [CN=90.0         ]
    [ N = 3.0:Tp 0.13]
*
    READ STORM                 15.0
    [ Ptot= 80.82 mm ]
    fname : C:\Users\pchiocchio\AppData\Local\Temp\425a9a70-92a1-415b-a3e1-ac09acf5d6f2\9d9aed76-16fc-4a0a-9fef-
    remark: 50 Year 12 Hour AES (Bloor, TRCA)
*
 ** CALIB NASHYD         0032  1  5.0    4.99    0.42  5.25  50.41 0.62   0.000
    [CN=90.0         ]
    [ N = 3.0:Tp 0.16]
*
    ADD [  0029+  0030]  0033  3  5.0   11.08    0.94  5.25  50.19  n/a   0.000
*
    ADD [  0033+  0031]  0033  1  5.0   14.01    1.19  5.25  50.18  n/a   0.000
*
    ADD [  0033+  0032]  0033  3  5.0   19.00    1.61  5.25  50.24  n/a   0.000
*
    READ STORM                 15.0
    [ Ptot= 80.82 mm ]
    fname : C:\Users\pchiocchio\AppData\Local\Temp\425a9a70-92a1-415b-a3e1-ac09acf5d6f2\9d9aed76-16fc-4a0a-9fef-
    remark: 50 Year 12 Hour AES (Bloor, TRCA)
*
 ** CALIB NASHYD         0001  1  5.0    1.24    0.08  5.50  59.55 0.74   0.000
    [CN=95.0         ]
    [ N = 2.5:Tp 0.59]
*
    READ STORM                 15.0
    [ Ptot= 80.82 mm ]
    fname : C:\Users\pchiocchio\AppData\Local\Temp\425a9a70-92a1-415b-a3e1-ac09acf5d6f2\9d9aed76-16fc-4a0a-9fef-
    remark: 50 Year 12 Hour AES (Bloor, TRCA)
*
 ** CALIB NASHYD         0002  1  5.0    1.96    0.11  5.67  59.56 0.74   0.000
    [CN=95.0         ]
    [ N = 2.5:Tp 0.77]
*
    READ STORM                 15.0
    [ Ptot= 80.82 mm ]
    fname : C:\Users\pchiocchio\AppData\Local\Temp\425a9a70-92a1-415b-a3e1-ac09acf5d6f2\9d9aed76-16fc-4a0a-9fef-
    remark: 50 Year 12 Hour AES (Bloor, TRCA)
*
 ** CALIB NASHYD         0004  1  5.0   40.84    1.20  7.33  59.57 0.74   0.000
    [CN=95.0         ]
    [ N = 2.5:Tp 2.02]
*
    ADD [  0001+  0002]  0096  3  5.0    3.20    0.19  5.58  59.56  n/a   0.000
*
    ADD [  0096+  0004]  0096  1  5.0   44.04    1.29  7.17  59.57  n/a   0.000
*
    CHANNEL[ 2:  0096]   0066  1  5.0   44.04    1.19  8.00  59.57  n/a   0.000
*
    READ STORM                 15.0
    [ Ptot= 80.82 mm ]
    fname : C:\Users\pchiocchio\AppData\Local\Temp\425a9a70-92a1-415b-a3e1-ac09acf5d6f2\9d9aed76-16fc-4a0a-9fef-
    remark: 50 Year 12 Hour AES (Bloor, TRCA)
*
 ** CALIB NASHYD         0005  1  5.0   34.73    0.56  9.92  59.57 0.74   0.000
    [CN=95.0         ]
    [ N = 2.5:Tp 4.29]
*
    ADD [  0005+  0066]  0003  3  5.0   78.77    1.69  8.33  59.57  n/a   0.000
*
    CHANNEL[ 2:  0003]   0078  1  5.0   78.77    1.65  8.83  59.57  n/a   0.000
*
    READ STORM                 15.0
    [ Ptot= 80.82 mm ]
    fname : C:\Users\pchiocchio\AppData\Local\Temp\425a9a70-92a1-415b-a3e1-ac09acf5d6f2\9d9aed76-16fc-4a0a-9fef-
    remark: 50 Year 12 Hour AES (Bloor, TRCA)
*
 ** CALIB NASHYD         0021  1  5.0    2.77    0.17  5.58  59.56 0.74   0.000
```

```
    [CN=95.0         ]
    [ N = 2.5:Tp 0.67]
*
    READ STORM                 15.0
    [ Ptot= 80.82 mm ]
    fname : C:\Users\pchiocchio\AppData\Local\Temp\425a9a70-92a1-415b-a3e1-ac09acf5d6f2\9d9aed76-16fc-4a0a-9fef-
    remark: 50 Year 12 Hour AES (Bloor, TRCA)
*
 ** CALIB NASHYD         0027  1  5.0   54.23    0.91  9.75  59.57 0.74   0.000
    [CN=95.0         ]
    [ N = 2.5:Tp 4.12]
*
    ADD [  0021+  0027]  0079  3  5.0   57.00    0.92  9.58  59.57  n/a   0.000
*
    ADD [  0079+  0078]  0079  1  5.0  135.77    2.56  9.00  59.57  n/a   0.000
*
    CHANNEL[ 2:  0079]   0080  1  5.0  135.77    2.55  9.17  59.57  n/a   0.000
*
    READ STORM                 15.0
    [ Ptot= 80.82 mm ]
    fname : C:\Users\pchiocchio\AppData\Local\Temp\425a9a70-92a1-415b-a3e1-ac09acf5d6f2\9d9aed76-16fc-4a0a-9fef-
    remark: 50 Year 12 Hour AES (Bloor, TRCA)
*
 ** CALIB NASHYD         0020  1  5.0    9.50    0.37  6.75  59.57 0.74   0.000
    [CN=95.0         ]
    [ N = 3.0:Tp 1.59]
*
    ADD [  0020+  0080]  0106  3  5.0  145.27    2.74  8.83  59.57  n/a   0.000
*
    READ STORM                 15.0
    [ Ptot= 80.82 mm ]
    fname : C:\Users\pchiocchio\AppData\Local\Temp\425a9a70-92a1-415b-a3e1-ac09acf5d6f2\9d9aed76-16fc-4a0a-9fef-
    remark: 50 Year 12 Hour AES (Bloor, TRCA)
*
 ** CALIB NASHYD         0019  1  5.0   18.32    0.46  7.92  59.57 0.74   0.000
    [CN=95.0         ]
    [ N = 2.5:Tp 2.47]
*
    ADD [  0106+  0019]  0018  3  5.0  163.59    3.18  8.83  59.57  n/a   0.000
*
    CHANNEL[ 2:  0018]   0081  1  5.0  163.59    3.18  8.83  59.57  n/a   0.000
*
    READ STORM                 15.0
    [ Ptot= 80.82 mm ]
    fname : C:\Users\pchiocchio\AppData\Local\Temp\425a9a70-92a1-415b-a3e1-ac09acf5d6f2\9d9aed76-16fc-4a0a-9fef-
    remark: 50 Year 12 Hour AES (Bloor, TRCA)
*
 ** CALIB NASHYD         0036  1  5.0    6.46    0.31  6.00  59.57 0.74   0.000
    [CN=95.0         ]
    [ N = 2.5:Tp 0.99]
*
    ADD [  0036+  0081]  0035  3  5.0  170.05    3.28  8.67  59.57  n/a   0.000
*
    CHANNEL[ 2:  0035]   0082  1  5.0  170.05    3.26  9.00  59.57  n/a   0.000
*
    READ STORM                 15.0
    [ Ptot= 80.82 mm ]
    fname : C:\Users\pchiocchio\AppData\Local\Temp\425a9a70-92a1-415b-a3e1-ac09acf5d6f2\9d9aed76-16fc-4a0a-9fef-
    remark: 50 Year 12 Hour AES (Bloor, TRCA)
*
 ** CALIB NASHYD         0044  1  5.0   24.38    0.39  9.92  59.57 0.74   0.000
    [CN=95.0         ]
    [ N = 2.5:Tp 4.29]
*
    ADD [  0044+  0082]  0056  3  5.0  194.43    3.64  9.08  59.57  n/a   0.000
*
    CHANNEL[ 2:  0056]   0083  1  5.0  194.43    3.64  9.25  59.57  n/a   0.000
*
    READ STORM                 15.0
    [ Ptot= 80.82 mm ]
    fname : C:\Users\pchiocchio\AppData\Local\Temp\425a9a70-92a1-415b-a3e1-ac09acf5d6f2\9d9aed76-16fc-4a0a-9fef-
    remark: 50 Year 12 Hour AES (Bloor, TRCA)
*
 ** CALIB NASHYD         0043  1  5.0   10.09    0.55  5.75  59.56 0.74   0.000
    [CN=95.0         ]
    [ N = 2.5:Tp 0.81]
*
    READ STORM                 15.0
    [ Ptot= 80.82 mm ]
    fname : C:\Users\pchiocchio\AppData\Local\Temp\425a9a70-92a1-415b-a3e1-ac09acf5d6f2\9d9aed76-16fc-4a0a-9fef-
    remark: 50 Year 12 Hour AES (Bloor, TRCA)
*
 ** CALIB NASHYD         0045  1  5.0    5.34    0.36  5.50  59.55 0.74   0.000
    [CN=95.0         ]
    [ N = 2.5:Tp 0.56]
*
    ADD [  0043+  0045]  0086  3  5.0   15.43    0.90  5.58  59.56  n/a   0.000
*
    ADD [  0086+  0083]  0086  1  5.0  209.86    3.77  9.00  59.57  n/a   0.000
*
    CHANNEL[ 2:  0086]   0085  1  5.0  209.86    3.76  9.25  59.57  n/a   0.000
*
    READ STORM                 15.0
    [ Ptot= 80.82 mm ]
    fname : C:\Users\pchiocchio\AppData\Local\Temp\425a9a70-92a1-415b-a3e1-ac09acf5d6f2\9d9aed76-16fc-4a0a-9fef-
```

```
    remark: 50 Year 12 Hour AES (Bloor, TRCA)
*
 ** CALIB NASHYD         0017  1  5.0    7.10    0.48  5.50  59.55 0.74   0.000
    [CN=95.0         ]
    [ N = 2.5:Tp 0.58]
*
    CHANNEL[ 2:  0017]   0084  1  5.0    7.10    0.38  6.00  59.52  n/a   0.000
*
    READ STORM                 15.0
    [ Ptot= 80.82 mm ]
    fname : C:\Users\pchiocchio\AppData\Local\Temp\425a9a70-92a1-415b-a3e1-ac09acf5d6f2\9d9aed76-16fc-4a0a-9fef-
    remark: 50 Year 12 Hour AES (Bloor, TRCA)
*
 ** CALIB NASHYD         0042  1  5.0   33.34    1.40  6.33  59.57 0.74   0.000
    [CN=95.0         ]
    [ N = 2.5:Tp 1.21]
*
    READ STORM                 15.0
    [ Ptot= 80.82 mm ]
    fname : C:\Users\pchiocchio\AppData\Local\Temp\425a9a70-92a1-415b-a3e1-ac09acf5d6f2\9d9aed76-16fc-4a0a-9fef-
    remark: 50 Year 12 Hour AES (Bloor, TRCA)
*
 ** CALIB NASHYD         0046  1  5.0   75.42    2.02  7.67  59.57 0.74   0.000
    [CN=95.0         ]
    [ N = 2.5:Tp 2.29]
*
    ADD [  0042+  0046]  0055  3  5.0  108.76    3.19  7.00  59.57  n/a   0.000
*
    ADD [  0055+  0084]  0055  1  5.0  115.86    3.48  6.75  59.57  n/a   0.000
*
    ADD [  0055+  0085]  0055  3  5.0  325.72    6.47  8.00  59.57  n/a   0.000
*
    CHANNEL[ 2:  0055]   0087  1  5.0  325.72    6.46  8.25  59.57  n/a   0.000
*
    READ STORM                 15.0
    [ Ptot= 80.82 mm ]
    fname : C:\Users\pchiocchio\AppData\Local\Temp\425a9a70-92a1-415b-a3e1-ac09acf5d6f2\9d9aed76-16fc-4a0a-9fef-
    remark: 50 Year 12 Hour AES (Bloor, TRCA)
*
 ** CALIB NASHYD         0006  1  5.0   22.56    0.72  7.00  57.63 0.71   0.000
    [CN=94.0         ]
    [ N = 2.5:Tp 1.70]
*
    CHANNEL[ 2:  0006]   0091  1  5.0   22.56    0.72  7.08  57.63  n/a   0.000
*
    READ STORM                 15.0
    [ Ptot= 80.82 mm ]
    fname : C:\Users\pchiocchio\AppData\Local\Temp\425a9a70-92a1-415b-a3e1-ac09acf5d6f2\9d9aed76-16fc-4a0a-9fef-
    remark: 50 Year 12 Hour AES (Bloor, TRCA)
*
 ** CALIB NASHYD         0008  1  5.0    6.20    0.32  5.83  57.62 0.71   0.000
    [CN=94.0         ]
    [ N = 2.5:Tp 0.85]
*
    ADD [  0008+  0091]  0011  3  5.0   28.76    0.96  6.67  57.62  n/a   0.000
*
    CHANNEL[ 2:  0011]   0092  1  5.0   28.76    0.95  6.75  57.62  n/a   0.000
*
    READ STORM                 15.0
    [ Ptot= 80.82 mm ]
    fname : C:\Users\pchiocchio\AppData\Local\Temp\425a9a70-92a1-415b-a3e1-ac09acf5d6f2\9d9aed76-16fc-4a0a-9fef-
    remark: 50 Year 12 Hour AES (Bloor, TRCA)
*
 ** CALIB NASHYD         0038  1  5.0    7.23    0.27  6.50  57.62 0.71   0.000
    [CN=94.0         ]
    [ N = 2.5:Tp 1.35]
*
    ADD [  0038+  0092]  0052  3  5.0   35.99    1.22  6.75  57.62  n/a   0.000
*
    READ STORM                 15.0
    [ Ptot= 80.82 mm ]
    fname : C:\Users\pchiocchio\AppData\Local\Temp\425a9a70-92a1-415b-a3e1-ac09acf5d6f2\9d9aed76-16fc-4a0a-9fef-
    remark: 50 Year 12 Hour AES (Bloor, TRCA)
*
 ** CALIB NASHYD         0007  1  5.0    1.34    0.11  5.33  57.54 0.71   0.000
    [CN=94.0         ]
    [ N = 2.5:Tp 0.36]
*
    CHANNEL[ 2:  0007]   0089  1  5.0    1.34    0.09  5.67  57.47  n/a   0.000
*
    READ STORM                 15.0
    [ Ptot= 80.82 mm ]
    fname : C:\Users\pchiocchio\AppData\Local\Temp\425a9a70-92a1-415b-a3e1-ac09acf5d6f2\9d9aed76-16fc-4a0a-9fef-
    remark: 50 Year 12 Hour AES (Bloor, TRCA)
*
 ** CALIB NASHYD         0009  1  5.0    5.08    0.24  5.92  57.62 0.71   0.000
    [CN=94.0         ]
    [ N = 2.5:Tp 0.94]
*
    ADD [  0089+  0009]  0010  3  5.0    6.42    0.32  5.83  57.59  n/a   0.000
*
    READ STORM                 15.0
    [ Ptot= 80.82 mm ]
    fname : C:\Users\pchiocchio\AppData\Local\Temp\425a9a70-92a1-415b-a3e1-ac09acf5d6f2\9d9aed76-16fc-4a0a-9fef-
    remark: 50 Year 12 Hour AES (Bloor, TRCA)
```

```
*
 ** CALIB NASHYD         0100  1  5.0   14.67    0.37  6.92  43.37 0.54   0.000
    [CN=85.0         ]
    [ N = 2.5:Tp 1.53]
*
    READ STORM                 15.0
    [ Ptot= 80.82 mm ]
    fname : C:\Users\pchiocchio\AppData\Local\Temp\425a9a70-92a1-415b-a3e1-ac09acf5d6f2\9d9aed76-16fc-4a0a-9fef-
    remark: 50 Year 12 Hour AES (Bloor, TRCA)
*
 ** CALIB NASHYD         0107  1  5.0    0.88    0.03  6.33  43.36 0.54   0.000
    [CN=85.0         ]
    [ N = 2.5:Tp 1.12]
*
    ADD [  0100+  0107]  0109  3  5.0   15.55    0.40  6.83  43.37  n/a   0.000
*
    ADD [  0010+  0109]  0108  3  5.0   21.97    0.67  6.33  47.52  n/a   0.000
*
    CHANNEL[ 2:  0108]   0094  1  5.0   21.97    0.65  6.75  47.52  n/a   0.000
*
    READ STORM                 15.0
    [ Ptot= 80.82 mm ]
    fname : C:\Users\pchiocchio\AppData\Local\Temp\425a9a70-92a1-415b-a3e1-ac09acf5d6f2\9d9aed76-16fc-4a0a-9fef-
    remark: 50 Year 12 Hour AES (Bloor, TRCA)
*
 ** CALIB NASHYD         0037  1  5.0    9.00    0.29  7.00  57.63 0.71   0.000
    [CN=94.0         ]
    [ N = 2.5:Tp 1.70]
*
    ADD [  0037+  0094]  0053  3  5.0   30.97    0.93  6.83  50.46  n/a   0.000
*
    READ STORM                 15.0
    [ Ptot= 80.82 mm ]
    fname : C:\Users\pchiocchio\AppData\Local\Temp\425a9a70-92a1-415b-a3e1-ac09acf5d6f2\9d9aed76-16fc-4a0a-9fef-
    remark: 50 Year 12 Hour AES (Bloor, TRCA)
*
 ** CALIB NASHYD         0013  1  5.0    7.42    0.30  6.33  57.62 0.71   0.000
    [CN=94.0         ]
    [ N = 2.5:Tp 1.22]
*
    READ STORM                 15.0
    [ Ptot= 80.82 mm ]
    fname : C:\Users\pchiocchio\AppData\Local\Temp\425a9a70-92a1-415b-a3e1-ac09acf5d6f2\9d9aed76-16fc-4a0a-9fef-
    remark: 50 Year 12 Hour AES (Bloor, TRCA)
*
 ** CALIB NASHYD         0014  1  5.0    4.74    0.24  5.83  57.62 0.71   0.000
    [CN=94.0         ]
    [ N = 2.5:Tp 0.87]
*
    READ STORM                 15.0
    [ Ptot= 80.82 mm ]
    fname : C:\Users\pchiocchio\AppData\Local\Temp\425a9a70-92a1-415b-a3e1-ac09acf5d6f2\9d9aed76-16fc-4a0a-9fef-
    remark: 50 Year 12 Hour AES (Bloor, TRCA)
*
 ** CALIB NASHYD         0015  1  5.0    7.40    0.29  6.42  57.62 0.71   0.000
    [CN=94.0         ]
    [ N = 2.5:Tp 1.28]
*
    READ STORM                 15.0
    [ Ptot= 80.82 mm ]
    fname : C:\Users\pchiocchio\AppData\Local\Temp\425a9a70-92a1-415b-a3e1-ac09acf5d6f2\9d9aed76-16fc-4a0a-9fef-
    remark: 50 Year 12 Hour AES (Bloor, TRCA)
*
 ** CALIB NASHYD         0105  1  5.0    6.60    0.26  6.42  57.62 0.71   0.000
    [CN=94.0         ]
    [ N = 2.5:Tp 1.28]
*
    ADD [  0105+  0013]  0012  3  5.0   14.02    0.56  6.42  57.62  n/a   0.000
*
    ADD [  0012+  0014]  0012  1  5.0   18.76    0.78  6.25  57.62  n/a   0.000
*
    ADD [  0012+  0015]  0012  3  5.0   26.16    1.07  6.25  57.62  n/a   0.000
*
    CHANNEL[ 2:  0012]   0093  1  5.0   26.16    1.06  6.42  57.62  n/a   0.000
*
    READ STORM                 15.0
    [ Ptot= 80.82 mm ]
    fname : C:\Users\pchiocchio\AppData\Local\Temp\425a9a70-92a1-415b-a3e1-ac09acf5d6f2\9d9aed76-16fc-4a0a-9fef-
    remark: 50 Year 12 Hour AES (Bloor, TRCA)
*
 ** CALIB NASHYD         0039  1  5.0   13.25    0.50  6.50  57.62 0.71   0.000
    [CN=94.0         ]
    [ N = 2.5:Tp 1.35]
*
    ADD [  0039+  0093]  0051  3  5.0   39.41    1.56  6.50  57.62  n/a   0.000
*
    READ STORM                 15.0
    [ Ptot= 80.82 mm ]
    fname : C:\Users\pchiocchio\AppData\Local\Temp\425a9a70-92a1-415b-a3e1-ac09acf5d6f2\9d9aed76-16fc-4a0a-9fef-
    remark: 50 Year 12 Hour AES (Bloor, TRCA)
*
 ** CALIB NASHYD         0040  1  5.0    7.26    0.29  6.42  57.62 0.71   0.000
    [CN=94.0         ]
    [ N = 2.5:Tp 1.23]
*
```

```
    READ STORM                 15.0
    [ Ptot= 80.82 mm ]
    fname : C:\Users\pchiocchio\AppData\Local\Temp\425a9a70-92a1-415b-a3e1-ac09acf5d6f2\9d9aed76-16fc-4a0a-9fef-
    remark: 50 Year 12 Hour AES (Bloor, TRCA)
*
 ** CALIB NASHYD         0102  1  5.0    4.10    0.13  6.33  43.37 0.54   0.000
    [CN=85.0         ]
    [ N = 2.5:Tp 1.12]
*
    CHANNEL[ 2:  0102]   0101  1  5.0    4.10    0.12  6.75  43.37  n/a   0.000
*
    ADD [  0101+  0040]  0090  3  5.0   11.36    0.41  6.50  52.48  n/a   0.000
*
    ADD [  0090+  0051]  0090  1  5.0   50.77    1.97  6.50  56.47  n/a   0.000
*
    ADD [  0090+  0052]  0090  3  5.0   86.76    3.18  6.58  56.95  n/a   0.000
*
    ADD [  0090+  0053]  0090  1  5.0  117.73    4.11  6.58  55.24  n/a   0.000
*
    CHANNEL[ 2:  0090]   0095  1  5.0  117.73    4.10  6.75  55.24  n/a   0.000
*
    READ STORM                 15.0
    [ Ptot= 80.82 mm ]
    fname : C:\Users\pchiocchio\AppData\Local\Temp\425a9a70-92a1-415b-a3e1-ac09acf5d6f2\9d9aed76-16fc-4a0a-9fef-
    remark: 50 Year 12 Hour AES (Bloor, TRCA)
*
 ** CALIB NASHYD         0041  1  5.0   12.70    0.55  6.17  57.62 0.71   0.000
    [CN=94.0         ]
    [ N = 2.5:Tp 1.08]
*
    ADD [  0041+  0095]  0050  3  5.0  130.43    4.61  6.67  55.47  n/a   0.000
*
    READ STORM                 15.0
    [ Ptot= 80.82 mm ]
    fname : C:\Users\pchiocchio\AppData\Local\Temp\425a9a70-92a1-415b-a3e1-ac09acf5d6f2\9d9aed76-16fc-4a0a-9fef-
    remark: 50 Year 12 Hour AES (Bloor, TRCA)
*
 ** CALIB NASHYD         0047  1  5.0   71.95    2.10  7.42  59.57 0.74   0.000
    [CN=95.0         ]
    [ N = 2.5:Tp 2.04]
*
    ADD [  0047+  0050]  0054  3  5.0  202.38    6.60  6.83  56.93  n/a   0.000
*
    ADD [  0054+  0087]  0054  1  5.0  528.10   12.43  7.42  58.56  n/a   0.000
*
    CHANNEL[ 2:  0054]   0088  1  5.0  528.10   12.41  7.50  58.56  n/a   0.000
*
    READ STORM                 15.0
    [ Ptot= 80.82 mm ]
    fname : C:\Users\pchiocchio\AppData\Local\Temp\425a9a70-92a1-415b-a3e1-ac09acf5d6f2\9d9aed76-16fc-4a0a-9fef-
    remark: 50 Year 12 Hour AES (Bloor, TRCA)
*
 ** CALIB NASHYD         0048  1  5.0   34.24    1.60  5.75  50.63 0.63   0.000
    [CN=90.0         ]
    [ N = 2.5:Tp 0.77]
*
    ADD [  0048+  0088]  0049  3  5.0  562.34   13.22  7.25  58.08  n/a   0.000
*
```

```
==========================================================================================

       V    V   I    SSSSS  U   U    A    L              (v 6.2.2001)
       V    V   I    SS     U   U   A A   L
        V  V    I     SS    U   U  AAAAA  L
        V  V    I      SS   U   U  A   A  L
         VV     I    SSSSS  UUUUU  A   A  LLLLL

        OOO   TTTTT  TTTTT  H   H  Y   Y  M   M   OOO    TM
       O   O    T      T    H   H   Y Y   MM MM  O   O
       O   O    T      T    H   H    Y    M   M  O   O
        OOO     T      T    H   H    Y    M   M   OOO
Developed and Distributed by Smart City Water Inc
Copyright 2007 - 2020 Smart City Water Inc
All rights reserved.


                  *****  S U M M A R Y   O U T P U T  *****


  Input   filename: C:\Program Files (x86)\Visual OTTHYMO 6.2\VO2\voin.dat
  Output  filename: C:\Users\pchiocchio\AppData\Local\Civica\VH5\d59fad6f-510d-48b8-a35a-1bee91f156cc\29dcbc0c-c7a4-42bf-9b82-
40afbb99e949\s
  Summary filename: C:\Users\pchiocchio\AppData\Local\Civica\VH5\d59fad6f-510d-48b8-a35a-1bee91f156cc\29dcbc0c-c7a4-42bf-9b82-
40afbb99e949\s


DATE: 02/02/2021                          TIME: 05:09:08

USER:


COMMENTS: ____________________________________________________________


  ************************************************
  ** SIMULATION :  100 - Year (6hr AES)         **
  ************************************************

  W/E COMMAND             HYD ID   DT    AREA  ' Qpeak Tpeak   R.V. R.C.   Qbase
                                  min     ha   '  cms   hrs     mm          cms

      START @  0.00 hrs
      --------------------
    READ STORM                 15.0
    [ Ptot= 80.31 mm ]
    fname : C:\Users\pchiocchio\AppData\Local\Temp\425a9a70-92a1-415b-a3e1-ac09acf5d6f2\ba356ae5-c789-48ed-9922-
    remark: 100 Year 6 Hour AES (Bloor, TRCA)
*
 ** CALIB NASHYD         0022  1  5.0    1.47    0.24  2.75  48.87 0.61   0.000
    [CN=90.0         ]
    [ N = 3.0:Tp 0.10]
*
    READ STORM                 15.0
    [ Ptot= 80.31 mm ]
    fname : C:\Users\pchiocchio\AppData\Local\Temp\425a9a70-92a1-415b-a3e1-ac09acf5d6f2\ba356ae5-c789-48ed-9922-
    remark: 100 Year 6 Hour AES (Bloor, TRCA)
*
 ** CALIB NASHYD         0023  1  5.0    6.75    0.86  2.83  50.14 0.62   0.000
    [CN=90.0         ]
    [ N = 3.0:Tp 0.26]
*
    READ STORM                 15.0
    [ Ptot= 80.31 mm ]
    fname : C:\Users\pchiocchio\AppData\Local\Temp\425a9a70-92a1-415b-a3e1-ac09acf5d6f2\ba356ae5-c789-48ed-9922-
    remark: 100 Year 6 Hour AES (Bloor, TRCA)
*
 ** CALIB NASHYD         0024  1  5.0    4.86    0.54  2.92  50.16 0.62   0.000
    [CN=90.0         ]
    [ N = 3.0:Tp 0.34]
*
    READ STORM                 15.0
    [ Ptot= 80.31 mm ]
    fname : C:\Users\pchiocchio\AppData\Local\Temp\425a9a70-92a1-415b-a3e1-ac09acf5d6f2\ba356ae5-c789-48ed-9922-
    remark: 100 Year 6 Hour AES (Bloor, TRCA)
*
 ** CALIB NASHYD         0025  1  5.0    5.72    0.77  2.83  50.12 0.62   0.000
    [CN=90.0         ]
    [ N = 3.0:Tp 0.23]
*
    ADD [  0022+  0023]  0026  3  5.0    8.22    1.06  2.75  49.91  n/a   0.000
*
    ADD [  0026+  0024]  0026  1  5.0   13.08    1.55  2.83  50.00  n/a   0.000
*
    ADD [  0026+  0025]  0026  3  5.0   18.80    2.32  2.83  50.04  n/a   0.000
*
    READ STORM                 15.0
    [ Ptot= 80.31 mm ]
    fname : C:\Users\pchiocchio\AppData\Local\Temp\425a9a70-92a1-415b-a3e1-ac09acf5d6f2\ba356ae5-c789-48ed-9922-
    remark: 100 Year 6 Hour AES (Bloor, TRCA)
*
 ** CALIB NASHYD         0028  1  5.0    2.78    0.37  2.83  50.12 0.62   0.000
    [CN=90.0         ]
    [ N = 3.0:Tp 0.23]
```

```
*
    READ STORM                 15.0
    [ Ptot= 80.31 mm ]
    fname : C:\Users\pchiocchio\AppData\Local\Temp\425a9a70-92a1-415b-a3e1-ac09acf5d6f2\ba356ae5-c789-48ed-9922-
    remark: 100 Year 6 Hour AES (Bloor, TRCA)
*
 ** CALIB NASHYD         0029  1  5.0    9.39    1.47  2.75  49.88 0.62   0.000
    [CN=90.0         ]
    [ N = 3.0:Tp 0.15]
*
    READ STORM                 15.0
    [ Ptot= 80.31 mm ]
    fname : C:\Users\pchiocchio\AppData\Local\Temp\425a9a70-92a1-415b-a3e1-ac09acf5d6f2\ba356ae5-c789-48ed-9922-
    remark: 100 Year 6 Hour AES (Bloor, TRCA)
*
 ** CALIB NASHYD         0030  1  5.0    1.69    0.28  2.75  48.87 0.61   0.000
    [CN=90.0         ]
    [ N = 3.0:Tp 0.10]
*
    READ STORM                 15.0
    [ Ptot= 80.31 mm ]
    fname : C:\Users\pchiocchio\AppData\Local\Temp\425a9a70-92a1-415b-a3e1-ac09acf5d6f2\ba356ae5-c789-48ed-9922-
    remark: 100 Year 6 Hour AES (Bloor, TRCA)
*
 ** CALIB NASHYD         0031  1  5.0    2.93    0.47  2.75  49.67 0.62   0.000
    [CN=90.0         ]
    [ N = 3.0:Tp 0.13]
*
    READ STORM                 15.0
    [ Ptot= 80.31 mm ]
    fname : C:\Users\pchiocchio\AppData\Local\Temp\425a9a70-92a1-415b-a3e1-ac09acf5d6f2\ba356ae5-c789-48ed-9922-
    remark: 100 Year 6 Hour AES (Bloor, TRCA)
*
 ** CALIB NASHYD         0032  1  5.0    4.99    0.77  2.75  49.95 0.62   0.000
    [CN=90.0         ]
    [ N = 3.0:Tp 0.16]
*
    ADD [  0029+  0030]  0033  3  5.0   11.08    1.74  2.75  49.73  n/a   0.000
*
    ADD [  0033+  0031]  0033  1  5.0   14.01    2.21  2.75  49.72  n/a   0.000
*
    ADD [  0033+  0032]  0033  3  5.0   19.00    2.98  2.75  49.78  n/a   0.000
*
    READ STORM                 15.0
    [ Ptot= 80.31 mm ]
    fname : C:\Users\pchiocchio\AppData\Local\Temp\425a9a70-92a1-415b-a3e1-ac09acf5d6f2\ba356ae5-c789-48ed-9922-
    remark: 100 Year 6 Hour AES (Bloor, TRCA)
*
 ** CALIB NASHYD         0001  1  5.0    1.24    0.11  3.25  59.05 0.74   0.000
    [CN=95.0         ]
    [ N = 2.5:Tp 0.59]
*
    READ STORM                 15.0
    [ Ptot= 80.31 mm ]
    fname : C:\Users\pchiocchio\AppData\Local\Temp\425a9a70-92a1-415b-a3e1-ac09acf5d6f2\ba356ae5-c789-48ed-9922-
    remark: 100 Year 6 Hour AES (Bloor, TRCA)
*
 ** CALIB NASHYD         0002  1  5.0    1.96    0.14  3.50  59.06 0.74   0.000
    [CN=95.0         ]
    [ N = 2.5:Tp 0.77]
*
    READ STORM                 15.0
    [ Ptot= 80.31 mm ]
    fname : C:\Users\pchiocchio\AppData\Local\Temp\425a9a70-92a1-415b-a3e1-ac09acf5d6f2\ba356ae5-c789-48ed-9922-
    remark: 100 Year 6 Hour AES (Bloor, TRCA)
*
 ** CALIB NASHYD         0004  1  5.0   40.84    1.38  4.92  59.08 0.74   0.000
    [CN=95.0         ]
    [ N = 2.5:Tp 2.02]
*
    ADD [  0001+  0002]  0096  3  5.0    3.20    0.24  3.33  59.06  n/a   0.000
*
    ADD [  0096+  0004]  0096  1  5.0   44.04    1.48  4.75  59.07  n/a   0.000
*
    CHANNEL[ 2:  0096]   0066  1  5.0   44.04    1.35  5.50  59.07  n/a   0.000
*
    READ STORM                 15.0
    [ Ptot= 80.31 mm ]
    fname : C:\Users\pchiocchio\AppData\Local\Temp\425a9a70-92a1-415b-a3e1-ac09acf5d6f2\ba356ae5-c789-48ed-9922-
    remark: 100 Year 6 Hour AES (Bloor, TRCA)
*
 ** CALIB NASHYD         0005  1  5.0   34.73    0.60  7.25  59.08 0.74   0.000
    [CN=95.0         ]
    [ N = 2.5:Tp 4.29]
*
    ADD [  0005+  0066]  0003  3  5.0   78.77    1.87  5.83  59.08  n/a   0.000
*
    CHANNEL[ 2:  0003]   0078  1  5.0   78.77    1.83  6.25  59.08  n/a   0.000
*
    READ STORM                 15.0
    [ Ptot= 80.31 mm ]
    fname : C:\Users\pchiocchio\AppData\Local\Temp\425a9a70-92a1-415b-a3e1-ac09acf5d6f2\ba356ae5-c789-48ed-9922-
    remark: 100 Year 6 Hour AES (Bloor, TRCA)
*
 ** CALIB NASHYD         0021  1  5.0    2.77    0.22  3.33  59.06 0.74   0.000
```

```
    [CN=95.0         ]
    [ N = 2.5:Tp 0.67]
*
    READ STORM                 15.0
    [ Ptot= 80.31 mm ]
    fname : C:\Users\pchiocchio\AppData\Local\Temp\425a9a70-92a1-415b-a3e1-ac09acf5d6f2\ba356ae5-c789-48ed-9922-
    remark: 100 Year 6 Hour AES (Bloor, TRCA)
*
 ** CALIB NASHYD         0027  1  5.0   54.23    0.97  7.08  59.08 0.74   0.000
    [CN=95.0         ]
    [ N = 2.5:Tp 4.12]
*
    ADD [  0021+  0027]  0079  3  5.0   57.00    0.98  7.00  59.08  n/a   0.000
*
    ADD [  0079+  0078]  0079  1  5.0  135.77    2.79  6.42  59.08  n/a   0.000
*
    CHANNEL[ 2:  0079]   0080  1  5.0  135.77    2.78  6.58  59.08  n/a   0.000
*
    READ STORM                 15.0
    [ Ptot= 80.31 mm ]
    fname : C:\Users\pchiocchio\AppData\Local\Temp\425a9a70-92a1-415b-a3e1-ac09acf5d6f2\ba356ae5-c789-48ed-9922-
    remark: 100 Year 6 Hour AES (Bloor, TRCA)
*
 ** CALIB NASHYD         0020  1  5.0    9.50    0.45  4.42  59.08 0.74   0.000
    [CN=95.0         ]
    [ N = 3.0:Tp 1.59]
*
    ADD [  0020+  0080]  0106  3  5.0  145.27    3.00  6.33  59.08  n/a   0.000
*
    READ STORM                 15.0
    [ Ptot= 80.31 mm ]
    fname : C:\Users\pchiocchio\AppData\Local\Temp\425a9a70-92a1-415b-a3e1-ac09acf5d6f2\ba356ae5-c789-48ed-9922-
    remark: 100 Year 6 Hour AES (Bloor, TRCA)
*
 ** CALIB NASHYD         0019  1  5.0   18.32    0.52  5.42  59.08 0.74   0.000
    [CN=95.0         ]
    [ N = 2.5:Tp 2.47]
*
    ADD [  0106+  0019]  0018  3  5.0  163.59    3.49  6.17  59.08  n/a   0.000
*
    CHANNEL[ 2:  0018]   0081  1  5.0  163.59    3.49  6.25  59.08  n/a   0.000
*
    READ STORM                 15.0
    [ Ptot= 80.31 mm ]
    fname : C:\Users\pchiocchio\AppData\Local\Temp\425a9a70-92a1-415b-a3e1-ac09acf5d6f2\ba356ae5-c789-48ed-9922-
    remark: 100 Year 6 Hour AES (Bloor, TRCA)
*
 ** CALIB NASHYD         0036  1  5.0    6.46    0.38  3.75  59.07 0.74   0.000
    [CN=95.0         ]
    [ N = 2.5:Tp 0.99]
*
    ADD [  0036+  0081]  0035  3  5.0  170.05    3.60  6.08  59.08  n/a   0.000
*
    CHANNEL[ 2:  0035]   0082  1  5.0  170.05    3.57  6.42  59.08  n/a   0.000
*
    READ STORM                 15.0
    [ Ptot= 80.31 mm ]
    fname : C:\Users\pchiocchio\AppData\Local\Temp\425a9a70-92a1-415b-a3e1-ac09acf5d6f2\ba356ae5-c789-48ed-9922-
    remark: 100 Year 6 Hour AES (Bloor, TRCA)
*
 ** CALIB NASHYD         0044  1  5.0   24.38    0.42  7.25  59.08 0.74   0.000
    [CN=95.0         ]
    [ N = 2.5:Tp 4.29]
*
    ADD [  0044+  0082]  0056  3  5.0  194.43    3.97  6.42  59.08  n/a   0.000
*
    CHANNEL[ 2:  0056]   0083  1  5.0  194.43    3.96  6.58  59.08  n/a   0.000
*
    READ STORM                 15.0
    [ Ptot= 80.31 mm ]
    fname : C:\Users\pchiocchio\AppData\Local\Temp\425a9a70-92a1-415b-a3e1-ac09acf5d6f2\ba356ae5-c789-48ed-9922-
    remark: 100 Year 6 Hour AES (Bloor, TRCA)
*
 ** CALIB NASHYD         0043  1  5.0   10.09    0.69  3.50  59.07 0.74   0.000
    [CN=95.0         ]
    [ N = 2.5:Tp 0.81]
*
    READ STORM                 15.0
    [ Ptot= 80.31 mm ]
    fname : C:\Users\pchiocchio\AppData\Local\Temp\425a9a70-92a1-415b-a3e1-ac09acf5d6f2\ba356ae5-c789-48ed-9922-
    remark: 100 Year 6 Hour AES (Bloor, TRCA)
*
 ** CALIB NASHYD         0045  1  5.0    5.34    0.47  3.25  59.05 0.74   0.000
    [CN=95.0         ]
    [ N = 2.5:Tp 0.56]
*
    ADD [  0043+  0045]  0086  3  5.0   15.43    1.13  3.42  59.06  n/a   0.000
*
    ADD [  0086+  0083]  0086  1  5.0  209.86    4.08  6.42  59.07  n/a   0.000
*
    CHANNEL[ 2:  0086]   0085  1  5.0  209.86    4.06  6.58  59.07  n/a   0.000
*
    READ STORM                 15.0
    [ Ptot= 80.31 mm ]
    fname : C:\Users\pchiocchio\AppData\Local\Temp\425a9a70-92a1-415b-a3e1-ac09acf5d6f2\ba356ae5-c789-48ed-9922-
```

```
    remark: 100 Year 6 Hour AES (Bloor, TRCA)
*
 ** CALIB NASHYD         0017  1  5.0    7.10    0.61  3.25  59.05 0.74   0.000
    [CN=95.0         ]
    [ N = 2.5:Tp 0.58]
*
    CHANNEL[ 2:  0017]   0084  1  5.0    7.10    0.48  3.67  59.01  n/a   0.000
*
    READ STORM                 15.0
    [ Ptot= 80.31 mm ]
    fname : C:\Users\pchiocchio\AppData\Local\Temp\425a9a70-92a1-415b-a3e1-ac09acf5d6f2\ba356ae5-c789-48ed-9922-
    remark: 100 Year 6 Hour AES (Bloor, TRCA)
*
 ** CALIB NASHYD         0042  1  5.0   33.34    1.70  4.00  59.07 0.74   0.000
    [CN=95.0         ]
    [ N = 2.5:Tp 1.21]
*
    READ STORM                 15.0
    [ Ptot= 80.31 mm ]
    fname : C:\Users\pchiocchio\AppData\Local\Temp\425a9a70-92a1-415b-a3e1-ac09acf5d6f2\ba356ae5-c789-48ed-9922-
    remark: 100 Year 6 Hour AES (Bloor, TRCA)
*
 ** CALIB NASHYD         0046  1  5.0   75.42    2.28  5.25  59.08 0.74   0.000
    [CN=95.0         ]
    [ N = 2.5:Tp 2.29]
*
    ADD [  0042+  0046]  0055  3  5.0  108.76    3.72  4.58  59.08  n/a   0.000
*
    ADD [  0055+  0084]  0055  1  5.0  115.86    4.08  4.42  59.07  n/a   0.000
*
    ADD [  0055+  0085]  0055  3  5.0  325.72    7.14  5.33  59.07  n/a   0.000
*
    CHANNEL[ 2:  0055]   0087  1  5.0  325.72    7.12  5.58  59.07  n/a   0.000
*
    READ STORM                 15.0
    [ Ptot= 80.31 mm ]
    fname : C:\Users\pchiocchio\AppData\Local\Temp\425a9a70-92a1-415b-a3e1-ac09acf5d6f2\ba356ae5-c789-48ed-9922-
    remark: 100 Year 6 Hour AES (Bloor, TRCA)
*
 ** CALIB NASHYD         0006  1  5.0   22.56    0.85  4.58  57.13 0.71   0.000
    [CN=94.0         ]
    [ N = 2.5:Tp 1.70]
*
    CHANNEL[ 2:  0006]   0091  1  5.0   22.56    0.85  4.67  57.13  n/a   0.000
*
    READ STORM                 15.0
    [ Ptot= 80.31 mm ]
    fname : C:\Users\pchiocchio\AppData\Local\Temp\425a9a70-92a1-415b-a3e1-ac09acf5d6f2\ba356ae5-c789-48ed-9922-
    remark: 100 Year 6 Hour AES (Bloor, TRCA)
*
 ** CALIB NASHYD         0008  1  5.0    6.20    0.39  3.58  57.13 0.71   0.000
    [CN=94.0         ]
    [ N = 2.5:Tp 0.85]
*
    ADD [  0008+  0091]  0011  3  5.0   28.76    1.13  4.33  57.13  n/a   0.000
*
    CHANNEL[ 2:  0011]   0092  1  5.0   28.76    1.13  4.42  57.13  n/a   0.000
*
    READ STORM                 15.0
    [ Ptot= 80.31 mm ]
    fname : C:\Users\pchiocchio\AppData\Local\Temp\425a9a70-92a1-415b-a3e1-ac09acf5d6f2\ba356ae5-c789-48ed-9922-
    remark: 100 Year 6 Hour AES (Bloor, TRCA)
*
 ** CALIB NASHYD         0038  1  5.0    7.23    0.33  4.25  57.13 0.71   0.000
    [CN=94.0         ]
    [ N = 2.5:Tp 1.35]
*
    ADD [  0038+  0092]  0052  3  5.0   35.99    1.45  4.42  57.13  n/a   0.000
*
    READ STORM                 15.0
    [ Ptot= 80.31 mm ]
    fname : C:\Users\pchiocchio\AppData\Local\Temp\425a9a70-92a1-415b-a3e1-ac09acf5d6f2\ba356ae5-c789-48ed-9922-
    remark: 100 Year 6 Hour AES (Bloor, TRCA)
*
 ** CALIB NASHYD         0007  1  5.0    1.34    0.15  2.92  57.05 0.71   0.000
    [CN=94.0         ]
    [ N = 2.5:Tp 0.36]
*
    CHANNEL[ 2:  0007]   0089  1  5.0    1.34    0.11  3.42  56.97  n/a   0.000
*
    READ STORM                 15.0
    [ Ptot= 80.31 mm ]
    fname : C:\Users\pchiocchio\AppData\Local\Temp\425a9a70-92a1-415b-a3e1-ac09acf5d6f2\ba356ae5-c789-48ed-9922-
    remark: 100 Year 6 Hour AES (Bloor, TRCA)
*
 ** CALIB NASHYD         0009  1  5.0    5.08    0.30  3.75  57.13 0.71   0.000
    [CN=94.0         ]
    [ N = 2.5:Tp 0.94]
*
    ADD [  0089+  0009]  0010  3  5.0    6.42    0.41  3.58  57.09  n/a   0.000
*
    READ STORM                 15.0
    [ Ptot= 80.31 mm ]
    fname : C:\Users\pchiocchio\AppData\Local\Temp\425a9a70-92a1-415b-a3e1-ac09acf5d6f2\ba356ae5-c789-48ed-9922-
    remark: 100 Year 6 Hour AES (Bloor, TRCA)
```

```
*
 ** CALIB NASHYD         0100  1  5.0   14.67    0.45  4.50  42.94 0.53   0.000
    [CN=85.0         ]
    [ N = 2.5:Tp 1.53]
*
    READ STORM                 15.0
    [ Ptot= 80.31 mm ]
    fname : C:\Users\pchiocchio\AppData\Local\Temp\425a9a70-92a1-415b-a3e1-ac09acf5d6f2\ba356ae5-c789-48ed-9922-
    remark: 100 Year 6 Hour AES (Bloor, TRCA)
*
 ** CALIB NASHYD         0107  1  5.0    0.88    0.03  4.00  42.93 0.53   0.000
    [CN=85.0         ]
    [ N = 2.5:Tp 1.12]
*
    ADD [  0100+  0107]  0109  3  5.0   15.55    0.48  4.50  42.93  n/a   0.000
*
    ADD [  0010+  0109]  0108  3  5.0   21.97    0.82  4.00  47.07  n/a   0.000
*
    CHANNEL[ 2:  0108]   0094  1  5.0   21.97    0.78  4.42  47.07  n/a   0.000
*
    READ STORM                 15.0
    [ Ptot= 80.31 mm ]
    fname : C:\Users\pchiocchio\AppData\Local\Temp\425a9a70-92a1-415b-a3e1-ac09acf5d6f2\ba356ae5-c789-48ed-9922-
    remark: 100 Year 6 Hour AES (Bloor, TRCA)
*
 ** CALIB NASHYD         0037  1  5.0    9.00    0.34  4.58  57.13 0.71   0.000
    [CN=94.0         ]
    [ N = 2.5:Tp 1.70]
*
    ADD [  0037+  0094]  0053  3  5.0   30.97    1.12  4.50  50.00  n/a   0.000
*
    READ STORM                 15.0
    [ Ptot= 80.31 mm ]
    fname : C:\Users\pchiocchio\AppData\Local\Temp\425a9a70-92a1-415b-a3e1-ac09acf5d6f2\ba356ae5-c789-48ed-9922-
    remark: 100 Year 6 Hour AES (Bloor, TRCA)
*
 ** CALIB NASHYD         0013  1  5.0    7.42    0.36  4.08  57.13 0.71   0.000
    [CN=94.0         ]
    [ N = 2.5:Tp 1.22]
*
    READ STORM                 15.0
    [ Ptot= 80.31 mm ]
    fname : C:\Users\pchiocchio\AppData\Local\Temp\425a9a70-92a1-415b-a3e1-ac09acf5d6f2\ba356ae5-c789-48ed-9922-
    remark: 100 Year 6 Hour AES (Bloor, TRCA)
*
 ** CALIB NASHYD         0014  1  5.0    4.74    0.30  3.58  57.13 0.71   0.000
    [CN=94.0         ]
    [ N = 2.5:Tp 0.87]
*
    READ STORM                 15.0
    [ Ptot= 80.31 mm ]
    fname : C:\Users\pchiocchio\AppData\Local\Temp\425a9a70-92a1-415b-a3e1-ac09acf5d6f2\ba356ae5-c789-48ed-9922-
    remark: 100 Year 6 Hour AES (Bloor, TRCA)
*
 ** CALIB NASHYD         0015  1  5.0    7.40    0.35  4.17  57.13 0.71   0.000
    [CN=94.0         ]
    [ N = 2.5:Tp 1.28]
*
    READ STORM                 15.0
    [ Ptot= 80.31 mm ]
    fname : C:\Users\pchiocchio\AppData\Local\Temp\425a9a70-92a1-415b-a3e1-ac09acf5d6f2\ba356ae5-c789-48ed-9922-
    remark: 100 Year 6 Hour AES (Bloor, TRCA)
*
 ** CALIB NASHYD         0105  1  5.0    6.60    0.31  4.17  57.13 0.71   0.000
    [CN=94.0         ]
    [ N = 2.5:Tp 1.28]
*
    ADD [  0105+  0013]  0012  3  5.0   14.02    0.67  4.08  57.13  n/a   0.000
*
    ADD [  0012+  0014]  0012  1  5.0   18.76    0.95  3.92  57.13  n/a   0.000
*
    ADD [  0012+  0015]  0012  3  5.0   26.16    1.29  4.00  57.13  n/a   0.000
*
    CHANNEL[ 2:  0012]   0093  1  5.0   26.16    1.28  4.08  57.13  n/a   0.000
*
    READ STORM                 15.0
    [ Ptot= 80.31 mm ]
    fname : C:\Users\pchiocchio\AppData\Local\Temp\425a9a70-92a1-415b-a3e1-ac09acf5d6f2\ba356ae5-c789-48ed-9922-
    remark: 100 Year 6 Hour AES (Bloor, TRCA)
*
 ** CALIB NASHYD         0039  1  5.0   13.25    0.60  4.25  57.13 0.71   0.000
    [CN=94.0         ]
    [ N = 2.5:Tp 1.35]
*
    ADD [  0039+  0093]  0051  3  5.0   39.41    1.88  4.17  57.13  n/a   0.000
*
    READ STORM                 15.0
    [ Ptot= 80.31 mm ]
    fname : C:\Users\pchiocchio\AppData\Local\Temp\425a9a70-92a1-415b-a3e1-ac09acf5d6f2\ba356ae5-c789-48ed-9922-
    remark: 100 Year 6 Hour AES (Bloor, TRCA)
*
 ** CALIB NASHYD         0040  1  5.0    7.26    0.35  4.08  57.13 0.71   0.000
    [CN=94.0         ]
    [ N = 2.5:Tp 1.23]
*
```

```
    READ STORM                 15.0
    [ Ptot= 80.31 mm ]
    fname : C:\Users\pchiocchio\AppData\Local\Temp\425a9a70-92a1-415b-a3e1-ac09acf5d6f2\ba356ae5-c789-48ed-9922-
    remark: 100 Year 6 Hour AES (Bloor, TRCA)
*
 ** CALIB NASHYD         0102  1  5.0    4.10    0.16  4.00  42.93 0.53   0.000
    [CN=85.0         ]
    [ N = 2.5:Tp 1.12]
*
    CHANNEL[ 2:  0102]   0101  1  5.0    4.10    0.15  4.42  42.93  n/a   0.000
*
    ADD [  0101+  0040]  0090  3  5.0   11.36    0.50  4.17  52.01  n/a   0.000
*
    ADD [  0090+  0051]  0090  1  5.0   50.77    2.38  4.17  55.98  n/a   0.000
*
    ADD [  0090+  0052]  0090  3  5.0   86.76    3.82  4.25  56.46  n/a   0.000
*
    ADD [  0090+  0053]  0090  1  5.0  117.73    4.92  4.25  54.76  n/a   0.000
*
    CHANNEL[ 2:  0090]   0095  1  5.0  117.73    4.91  4.42  54.76  n/a   0.000
*
    READ STORM                 15.0
    [ Ptot= 80.31 mm ]
    fname : C:\Users\pchiocchio\AppData\Local\Temp\425a9a70-92a1-415b-a3e1-ac09acf5d6f2\ba356ae5-c789-48ed-9922-
    remark: 100 Year 6 Hour AES (Bloor, TRCA)
*
 ** CALIB NASHYD         0041  1  5.0   12.70    0.68  3.92  57.13 0.71   0.000
    [CN=94.0         ]
    [ N = 2.5:Tp 1.08]
*
    ADD [  0041+  0095]  0050  3  5.0  130.43    5.54  4.33  54.99  n/a   0.000
*
    READ STORM                 15.0
    [ Ptot= 80.31 mm ]
    fname : C:\Users\pchiocchio\AppData\Local\Temp\425a9a70-92a1-415b-a3e1-ac09acf5d6f2\ba356ae5-c789-48ed-9922-
    remark: 100 Year 6 Hour AES (Bloor, TRCA)
*
 ** CALIB NASHYD         0047  1  5.0   71.95    2.40  4.92  59.08 0.74   0.000
    [CN=95.0         ]
    [ N = 2.5:Tp 2.04]
*
    ADD [  0047+  0050]  0054  3  5.0  202.38    7.82  4.50  56.44  n/a   0.000
*
    ADD [  0054+  0087]  0054  1  5.0  528.10   14.36  4.83  58.07  n/a   0.000
*
    CHANNEL[ 2:  0054]   0088  1  5.0  528.10   14.32  5.00  58.07  n/a   0.000
*
    READ STORM                 15.0
    [ Ptot= 80.31 mm ]
    fname : C:\Users\pchiocchio\AppData\Local\Temp\425a9a70-92a1-415b-a3e1-ac09acf5d6f2\ba356ae5-c789-48ed-9922-
    remark: 100 Year 6 Hour AES (Bloor, TRCA)
*
 ** CALIB NASHYD         0048  1  5.0   34.24    2.03  3.50  50.16 0.62   0.000
    [CN=90.0         ]
    [ N = 2.5:Tp 0.77]
*
    ADD [  0048+  0088]  0049  3  5.0  562.34   15.33  4.75  57.58  n/a   0.000
*
```

```
==========================================================================================

       V    V   I    SSSSS  U   U    A    L              (v 6.2.2001)
       V    V   I    SS     U   U   A A   L
        V  V    I     SS    U   U  AAAAA  L
        V  V    I      SS   U   U  A   A  L
         VV     I    SSSSS  UUUUU  A   A  LLLLL

        OOO   TTTTT  TTTTT  H   H  Y   Y  M   M   OOO    TM
       O   O    T      T    H   H   Y Y   MM MM  O   O
       O   O    T      T    H   H    Y    M   M  O   O
        OOO     T      T    H   H    Y    M   M   OOO
Developed and Distributed by Smart City Water Inc
Copyright 2007 - 2020 Smart City Water Inc
All rights reserved.


                  *****  S U M M A R Y   O U T P U T  *****


  Input   filename: C:\Program Files (x86)\Visual OTTHYMO 6.2\VO2\voin.dat
  Output  filename: C:\Users\pchiocchio\AppData\Local\Civica\VH5\d59fad6f-510d-48b8-a35a-1bee91f156cc\629e3c60-2431-49e4-8db3-
d02150e93a5c\s
  Summary filename: C:\Users\pchiocchio\AppData\Local\Civica\VH5\d59fad6f-510d-48b8-a35a-1bee91f156cc\629e3c60-2431-49e4-8db3-
d02150e93a5c\s


DATE: 02/02/2021                          TIME: 05:09:09

USER:


COMMENTS: ____________________________________________________________


  ************************************************
  ** SIMULATION : 100 - Year (12hr AES)         **
  ************************************************

  W/E COMMAND             HYD ID   DT    AREA  ' Qpeak Tpeak   R.V. R.C.   Qbase
                                  min     ha   '  cms   hrs     mm          cms

      START @  0.00 hrs
      --------------------
    READ STORM                 15.0
    [ Ptot= 88.54 mm ]
    fname : C:\Users\pchiocchio\AppData\Local\Temp\425a9a70-92a1-415b-a3e1-ac09acf5d6f2\c779bf9c-fd49-4135-b6f1-
    remark: 100 Year 12 Hour AES (Bloor, TRCA)
*
 ** CALIB NASHYD         0022  1  5.0    1.47    0.14  5.25  56.28 0.64   0.000
    [CN=90.0         ]
    [ N = 3.0:Tp 0.10]
*
    READ STORM                 15.0
    [ Ptot= 88.54 mm ]
    fname : C:\Users\pchiocchio\AppData\Local\Temp\425a9a70-92a1-415b-a3e1-ac09acf5d6f2\c779bf9c-fd49-4135-b6f1-
    remark: 100 Year 12 Hour AES (Bloor, TRCA)
*
 ** CALIB NASHYD         0023  1  5.0    6.75    0.61  5.25  57.74 0.65   0.000
    [CN=90.0         ]
    [ N = 3.0:Tp 0.26]
*
    READ STORM                 15.0
    [ Ptot= 88.54 mm ]
    fname : C:\Users\pchiocchio\AppData\Local\Temp\425a9a70-92a1-415b-a3e1-ac09acf5d6f2\c779bf9c-fd49-4135-b6f1-
    remark: 100 Year 12 Hour AES (Bloor, TRCA)
*
 ** CALIB NASHYD         0024  1  5.0    4.86    0.42  5.33  57.76 0.65   0.000
    [CN=90.0         ]
    [ N = 3.0:Tp 0.34]
*
    READ STORM                 15.0
    [ Ptot= 88.54 mm ]
    fname : C:\Users\pchiocchio\AppData\Local\Temp\425a9a70-92a1-415b-a3e1-ac09acf5d6f2\c779bf9c-fd49-4135-b6f1-
    remark: 100 Year 12 Hour AES (Bloor, TRCA)
*
 ** CALIB NASHYD         0025  1  5.0    5.72    0.53  5.25  57.71 0.65   0.000
    [CN=90.0         ]
    [ N = 3.0:Tp 0.23]
*
    ADD [  0022+  0023]  0026  3  5.0    8.22    0.75  5.25  57.48  n/a   0.000
*
    ADD [  0026+  0024]  0026  1  5.0   13.08    1.17  5.25  57.58  n/a   0.000
*
    ADD [  0026+  0025]  0026  3  5.0   18.80    1.70  5.25  57.62  n/a   0.000
*
    READ STORM                 15.0
    [ Ptot= 88.54 mm ]
    fname : C:\Users\pchiocchio\AppData\Local\Temp\425a9a70-92a1-415b-a3e1-ac09acf5d6f2\c779bf9c-fd49-4135-b6f1-
    remark: 100 Year 12 Hour AES (Bloor, TRCA)
*
 ** CALIB NASHYD         0028  1  5.0    2.78    0.26  5.25  57.71 0.65   0.000
    [CN=90.0         ]
    [ N = 3.0:Tp 0.23]
```

```
*
    READ STORM                 15.0
    [ Ptot= 88.54 mm ]
    fname : C:\Users\pchiocchio\AppData\Local\Temp\425a9a70-92a1-415b-a3e1-ac09acf5d6f2\c779bf9c-fd49-4135-b6f1-
    remark: 100 Year 12 Hour AES (Bloor, TRCA)
*
 ** CALIB NASHYD         0029  1  5.0    9.39    0.90  5.25  57.44 0.65   0.000
    [CN=90.0         ]
    [ N = 3.0:Tp 0.15]
*
    READ STORM                 15.0
    [ Ptot= 88.54 mm ]
    fname : C:\Users\pchiocchio\AppData\Local\Temp\425a9a70-92a1-415b-a3e1-ac09acf5d6f2\c779bf9c-fd49-4135-b6f1-
    remark: 100 Year 12 Hour AES (Bloor, TRCA)
*
 ** CALIB NASHYD         0030  1  5.0    1.69    0.16  5.25  56.28 0.64   0.000
    [CN=90.0         ]
    [ N = 3.0:Tp 0.10]
*
    READ STORM                 15.0
    [ Ptot= 88.54 mm ]
    fname : C:\Users\pchiocchio\AppData\Local\Temp\425a9a70-92a1-415b-a3e1-ac09acf5d6f2\c779bf9c-fd49-4135-b6f1-
    remark: 100 Year 12 Hour AES (Bloor, TRCA)
*
 ** CALIB NASHYD         0031  1  5.0    2.93    0.28  5.25  57.21 0.65   0.000
    [CN=90.0         ]
    [ N = 3.0:Tp 0.13]
*
    READ STORM                 15.0
    [ Ptot= 88.54 mm ]
    fname : C:\Users\pchiocchio\AppData\Local\Temp\425a9a70-92a1-415b-a3e1-ac09acf5d6f2\c779bf9c-fd49-4135-b6f1-
    remark: 100 Year 12 Hour AES (Bloor, TRCA)
*
 ** CALIB NASHYD         0032  1  5.0    4.99    0.48  5.25  57.52 0.65   0.000
    [CN=90.0         ]
    [ N = 3.0:Tp 0.16]
*
    ADD [  0029+  0030]  0033  3  5.0   11.08    1.06  5.25  57.27  n/a   0.000
*
    ADD [  0033+  0031]  0033  1  5.0   14.01    1.34  5.25  57.25  n/a   0.000
*
    ADD [  0033+  0032]  0033  3  5.0   19.00    1.81  5.25  57.32  n/a   0.000
*
    READ STORM                 15.0
    [ Ptot= 88.54 mm ]
    fname : C:\Users\pchiocchio\AppData\Local\Temp\425a9a70-92a1-415b-a3e1-ac09acf5d6f2\c779bf9c-fd49-4135-b6f1-
    remark: 100 Year 12 Hour AES (Bloor, TRCA)
*
 ** CALIB NASHYD         0001  1  5.0    1.24    0.09  5.50  67.09 0.76   0.000
    [CN=95.0         ]
    [ N = 2.5:Tp 0.59]
*
    READ STORM                 15.0
    [ Ptot= 88.54 mm ]
    fname : C:\Users\pchiocchio\AppData\Local\Temp\425a9a70-92a1-415b-a3e1-ac09acf5d6f2\c779bf9c-fd49-4135-b6f1-
    remark: 100 Year 12 Hour AES (Bloor, TRCA)
*
 ** CALIB NASHYD         0002  1  5.0    1.96    0.12  5.67  67.10 0.76   0.000
    [CN=95.0         ]
    [ N = 2.5:Tp 0.77]
*
    READ STORM                 15.0
    [ Ptot= 88.54 mm ]
    fname : C:\Users\pchiocchio\AppData\Local\Temp\425a9a70-92a1-415b-a3e1-ac09acf5d6f2\c779bf9c-fd49-4135-b6f1-
    remark: 100 Year 12 Hour AES (Bloor, TRCA)
*
 ** CALIB NASHYD         0004  1  5.0   40.84    1.35  7.33  67.11 0.76   0.000
    [CN=95.0         ]
    [ N = 2.5:Tp 2.02]
*
    ADD [  0001+  0002]  0096  3  5.0    3.20    0.22  5.58  67.10  n/a   0.000
*
    ADD [  0096+  0004]  0096  1  5.0   44.04    1.45  7.17  67.11  n/a   0.000
*
    CHANNEL[ 2:  0096]   0066  1  5.0   44.04    1.35  7.92  67.11  n/a   0.000
*
    READ STORM                 15.0
    [ Ptot= 88.54 mm ]
    fname : C:\Users\pchiocchio\AppData\Local\Temp\425a9a70-92a1-415b-a3e1-ac09acf5d6f2\c779bf9c-fd49-4135-b6f1-
    remark: 100 Year 12 Hour AES (Bloor, TRCA)
*
 ** CALIB NASHYD         0005  1  5.0   34.73    0.63  9.92  67.12 0.76   0.000
    [CN=95.0         ]
    [ N = 2.5:Tp 4.29]
*
    ADD [  0005+  0066]  0003  3  5.0   78.77    1.90  8.25  67.11  n/a   0.000
*
    CHANNEL[ 2:  0003]   0078  1  5.0   78.77    1.87  8.67  67.11  n/a   0.000
*
    READ STORM                 15.0
    [ Ptot= 88.54 mm ]
    fname : C:\Users\pchiocchio\AppData\Local\Temp\425a9a70-92a1-415b-a3e1-ac09acf5d6f2\c779bf9c-fd49-4135-b6f1-
    remark: 100 Year 12 Hour AES (Bloor, TRCA)
*
 ** CALIB NASHYD         0021  1  5.0    2.77    0.19  5.58  67.09 0.76   0.000
```

```
    [CN=95.0         ]
    [ N = 2.5:Tp 0.67]
*
    READ STORM                 15.0
    [ Ptot= 88.54 mm ]
    fname : C:\Users\pchiocchio\AppData\Local\Temp\425a9a70-92a1-415b-a3e1-ac09acf5d6f2\c779bf9c-fd49-4135-b6f1-
    remark: 100 Year 12 Hour AES (Bloor, TRCA)
*
 ** CALIB NASHYD         0027  1  5.0   54.23    1.02  9.75  67.12 0.76   0.000
    [CN=95.0         ]
    [ N = 2.5:Tp 4.12]
*
    ADD [  0021+  0027]  0079  3  5.0   57.00    1.04  9.58  67.11  n/a   0.000
*
    ADD [  0079+  0078]  0079  1  5.0  135.77    2.89  8.92  67.11  n/a   0.000
*
    CHANNEL[ 2:  0079]   0080  1  5.0  135.77    2.88  9.08  67.11  n/a   0.000
*
    READ STORM                 15.0
    [ Ptot= 88.54 mm ]
    fname : C:\Users\pchiocchio\AppData\Local\Temp\425a9a70-92a1-415b-a3e1-ac09acf5d6f2\c779bf9c-fd49-4135-b6f1-
    remark: 100 Year 12 Hour AES (Bloor, TRCA)
*
 ** CALIB NASHYD         0020  1  5.0    9.50    0.42  6.67  67.12 0.76   0.000
    [CN=95.0         ]
    [ N = 3.0:Tp 1.59]
*
    ADD [  0020+  0080]  0106  3  5.0  145.27    3.11  8.75  67.11  n/a   0.000
*
    READ STORM                 15.0
    [ Ptot= 88.54 mm ]
    fname : C:\Users\pchiocchio\AppData\Local\Temp\425a9a70-92a1-415b-a3e1-ac09acf5d6f2\c779bf9c-fd49-4135-b6f1-
    remark: 100 Year 12 Hour AES (Bloor, TRCA)
*
 ** CALIB NASHYD         0019  1  5.0   18.32    0.52  7.83  67.11 0.76   0.000
    [CN=95.0         ]
    [ N = 2.5:Tp 2.47]
*
    ADD [  0106+  0019]  0018  3  5.0  163.59    3.61  8.67  67.11  n/a   0.000
*
    CHANNEL[ 2:  0018]   0081  1  5.0  163.59    3.61  8.67  67.11  n/a   0.000
*
    READ STORM                 15.0
    [ Ptot= 88.54 mm ]
    fname : C:\Users\pchiocchio\AppData\Local\Temp\425a9a70-92a1-415b-a3e1-ac09acf5d6f2\c779bf9c-fd49-4135-b6f1-
    remark: 100 Year 12 Hour AES (Bloor, TRCA)
*
 ** CALIB NASHYD         0036  1  5.0    6.46    0.35  6.00  67.11 0.76   0.000
    [CN=95.0         ]
    [ N = 2.5:Tp 0.99]
*
    ADD [  0036+  0081]  0035  3  5.0  170.05    3.73  8.50  67.11  n/a   0.000
*
    CHANNEL[ 2:  0035]   0082  1  5.0  170.05    3.70  8.83  67.11  n/a   0.000
*
    READ STORM                 15.0
    [ Ptot= 88.54 mm ]
    fname : C:\Users\pchiocchio\AppData\Local\Temp\425a9a70-92a1-415b-a3e1-ac09acf5d6f2\c779bf9c-fd49-4135-b6f1-
    remark: 100 Year 12 Hour AES (Bloor, TRCA)
*
 ** CALIB NASHYD         0044  1  5.0   24.38    0.44  9.92  67.12 0.76   0.000
    [CN=95.0         ]
    [ N = 2.5:Tp 4.29]
*
    ADD [  0044+  0082]  0056  3  5.0  194.43    4.13  8.92  67.11  n/a   0.000
*
    CHANNEL[ 2:  0056]   0083  1  5.0  194.43    4.12  9.08  67.11  n/a   0.000
*
    READ STORM                 15.0
    [ Ptot= 88.54 mm ]
    fname : C:\Users\pchiocchio\AppData\Local\Temp\425a9a70-92a1-415b-a3e1-ac09acf5d6f2\c779bf9c-fd49-4135-b6f1-
    remark: 100 Year 12 Hour AES (Bloor, TRCA)
*
 ** CALIB NASHYD         0043  1  5.0   10.09    0.62  5.75  67.10 0.76   0.000
    [CN=95.0         ]
    [ N = 2.5:Tp 0.81]
*
    READ STORM                 15.0
    [ Ptot= 88.54 mm ]
    fname : C:\Users\pchiocchio\AppData\Local\Temp\425a9a70-92a1-415b-a3e1-ac09acf5d6f2\c779bf9c-fd49-4135-b6f1-
    remark: 100 Year 12 Hour AES (Bloor, TRCA)
*
 ** CALIB NASHYD         0045  1  5.0    5.34    0.41  5.50  67.08 0.76   0.000
    [CN=95.0         ]
    [ N = 2.5:Tp 0.56]
*
    ADD [  0043+  0045]  0086  3  5.0   15.43    1.01  5.58  67.10  n/a   0.000
*
    ADD [  0086+  0083]  0086  1  5.0  209.86    4.29  8.83  67.11  n/a   0.000
*
    CHANNEL[ 2:  0086]   0085  1  5.0  209.86    4.28  9.00  67.11  n/a   0.000
*
    READ STORM                 15.0
    [ Ptot= 88.54 mm ]
    fname : C:\Users\pchiocchio\AppData\Local\Temp\425a9a70-92a1-415b-a3e1-ac09acf5d6f2\c779bf9c-fd49-4135-b6f1-
```

```
    remark: 100 Year 12 Hour AES (Bloor, TRCA)
*
 ** CALIB NASHYD         0017  1  5.0    7.10    0.53  5.50  67.09 0.76   0.000
    [CN=95.0         ]
    [ N = 2.5:Tp 0.58]
*
    CHANNEL[ 2:  0017]   0084  1  5.0    7.10    0.43  5.92  67.05  n/a   0.000
*
    READ STORM                 15.0
    [ Ptot= 88.54 mm ]
    fname : C:\Users\pchiocchio\AppData\Local\Temp\425a9a70-92a1-415b-a3e1-ac09acf5d6f2\c779bf9c-fd49-4135-b6f1-
    remark: 100 Year 12 Hour AES (Bloor, TRCA)
*
 ** CALIB NASHYD         0042  1  5.0   33.34    1.58  6.33  67.11 0.76   0.000
    [CN=95.0         ]
    [ N = 2.5:Tp 1.21]
*
    READ STORM                 15.0
    [ Ptot= 88.54 mm ]
    fname : C:\Users\pchiocchio\AppData\Local\Temp\425a9a70-92a1-415b-a3e1-ac09acf5d6f2\c779bf9c-fd49-4135-b6f1-
    remark: 100 Year 12 Hour AES (Bloor, TRCA)
*
 ** CALIB NASHYD         0046  1  5.0   75.42    2.27  7.67  67.12 0.76   0.000
    [CN=95.0         ]
    [ N = 2.5:Tp 2.29]
*
    ADD [  0042+  0046]  0055  3  5.0  108.76    3.60  6.92  67.11  n/a   0.000
*
    ADD [  0055+  0084]  0055  1  5.0  115.86    3.93  6.75  67.11  n/a   0.000
*
    ADD [  0055+  0085]  0055  3  5.0  325.72    7.37  8.08  67.11  n/a   0.000
*
    CHANNEL[ 2:  0055]   0087  1  5.0  325.72    7.36  8.25  67.11  n/a   0.000
*
    READ STORM                 15.0
    [ Ptot= 88.54 mm ]
    fname : C:\Users\pchiocchio\AppData\Local\Temp\425a9a70-92a1-415b-a3e1-ac09acf5d6f2\c779bf9c-fd49-4135-b6f1-
    remark: 100 Year 12 Hour AES (Bloor, TRCA)
*
 ** CALIB NASHYD         0006  1  5.0   22.56    0.82  6.92  65.10 0.74   0.000
    [CN=94.0         ]
    [ N = 2.5:Tp 1.70]
*
    CHANNEL[ 2:  0006]   0091  1  5.0   22.56    0.82  7.00  65.10  n/a   0.000
*
    READ STORM                 15.0
    [ Ptot= 88.54 mm ]
    fname : C:\Users\pchiocchio\AppData\Local\Temp\425a9a70-92a1-415b-a3e1-ac09acf5d6f2\c779bf9c-fd49-4135-b6f1-
    remark: 100 Year 12 Hour AES (Bloor, TRCA)
*
 ** CALIB NASHYD         0008  1  5.0    6.20    0.36  5.83  65.09 0.74   0.000
    [CN=94.0         ]
    [ N = 2.5:Tp 0.85]
*
    ADD [  0008+  0091]  0011  3  5.0   28.76    1.08  6.58  65.10  n/a   0.000
*
    CHANNEL[ 2:  0011]   0092  1  5.0   28.76    1.08  6.75  65.10  n/a   0.000
*
    READ STORM                 15.0
    [ Ptot= 88.54 mm ]
    fname : C:\Users\pchiocchio\AppData\Local\Temp\425a9a70-92a1-415b-a3e1-ac09acf5d6f2\c779bf9c-fd49-4135-b6f1-
    remark: 100 Year 12 Hour AES (Bloor, TRCA)
*
 ** CALIB NASHYD         0038  1  5.0    7.23    0.31  6.50  65.10 0.74   0.000
    [CN=94.0         ]
    [ N = 2.5:Tp 1.35]
*
    ADD [  0038+  0092]  0052  3  5.0   35.99    1.38  6.67  65.10  n/a   0.000
*
    READ STORM                 15.0
    [ Ptot= 88.54 mm ]
    fname : C:\Users\pchiocchio\AppData\Local\Temp\425a9a70-92a1-415b-a3e1-ac09acf5d6f2\c779bf9c-fd49-4135-b6f1-
    remark: 100 Year 12 Hour AES (Bloor, TRCA)
*
 ** CALIB NASHYD         0007  1  5.0    1.34    0.12  5.33  65.00 0.73   0.000
    [CN=94.0         ]
    [ N = 2.5:Tp 0.36]
*
    CHANNEL[ 2:  0007]   0089  1  5.0    1.34    0.10  5.67  64.94  n/a   0.000
*
    READ STORM                 15.0
    [ Ptot= 88.54 mm ]
    fname : C:\Users\pchiocchio\AppData\Local\Temp\425a9a70-92a1-415b-a3e1-ac09acf5d6f2\c779bf9c-fd49-4135-b6f1-
    remark: 100 Year 12 Hour AES (Bloor, TRCA)
*
 ** CALIB NASHYD         0009  1  5.0    5.08    0.27  5.92  65.09 0.74   0.000
    [CN=94.0         ]
    [ N = 2.5:Tp 0.94]
*
    ADD [  0089+  0009]  0010  3  5.0    6.42    0.37  5.83  65.06  n/a   0.000
*
    READ STORM                 15.0
    [ Ptot= 88.54 mm ]
    fname : C:\Users\pchiocchio\AppData\Local\Temp\425a9a70-92a1-415b-a3e1-ac09acf5d6f2\c779bf9c-fd49-4135-b6f1-
    remark: 100 Year 12 Hour AES (Bloor, TRCA)
```

```
*
 ** CALIB NASHYD         0100  1  5.0   14.67    0.43  6.83  50.00 0.56   0.000
    [CN=85.0         ]
    [ N = 2.5:Tp 1.53]
*
    READ STORM                 15.0
    [ Ptot= 88.54 mm ]
    fname : C:\Users\pchiocchio\AppData\Local\Temp\425a9a70-92a1-415b-a3e1-ac09acf5d6f2\c779bf9c-fd49-4135-b6f1-
    remark: 100 Year 12 Hour AES (Bloor, TRCA)
*
 ** CALIB NASHYD         0107  1  5.0    0.88    0.03  6.33  50.00 0.56   0.000
    [CN=85.0         ]
    [ N = 2.5:Tp 1.12]
*
    ADD [  0100+  0107]  0109  3  5.0   15.55    0.46  6.83  50.00  n/a   0.000
*
    ADD [  0010+  0109]  0108  3  5.0   21.97    0.77  6.33  54.40  n/a   0.000
*
    CHANNEL[ 2:  0108]   0094  1  5.0   21.97    0.74  6.75  54.40  n/a   0.000
*
    READ STORM                 15.0
    [ Ptot= 88.54 mm ]
    fname : C:\Users\pchiocchio\AppData\Local\Temp\425a9a70-92a1-415b-a3e1-ac09acf5d6f2\c779bf9c-fd49-4135-b6f1-
    remark: 100 Year 12 Hour AES (Bloor, TRCA)
*
 ** CALIB NASHYD         0037  1  5.0    9.00    0.33  6.92  65.10 0.74   0.000
    [CN=94.0         ]
    [ N = 2.5:Tp 1.70]
*
    ADD [  0037+  0094]  0053  3  5.0   30.97    1.06  6.75  57.51  n/a   0.000
*
    READ STORM                 15.0
    [ Ptot= 88.54 mm ]
    fname : C:\Users\pchiocchio\AppData\Local\Temp\425a9a70-92a1-415b-a3e1-ac09acf5d6f2\c779bf9c-fd49-4135-b6f1-
    remark: 100 Year 12 Hour AES (Bloor, TRCA)
*
 ** CALIB NASHYD         0013  1  5.0    7.42    0.34  6.33  65.10 0.74   0.000
    [CN=94.0         ]
    [ N = 2.5:Tp 1.22]
*
    READ STORM                 15.0
    [ Ptot= 88.54 mm ]
    fname : C:\Users\pchiocchio\AppData\Local\Temp\425a9a70-92a1-415b-a3e1-ac09acf5d6f2\c779bf9c-fd49-4135-b6f1-
    remark: 100 Year 12 Hour AES (Bloor, TRCA)
*
 ** CALIB NASHYD         0014  1  5.0    4.74    0.27  5.83  65.09 0.74   0.000
    [CN=94.0         ]
    [ N = 2.5:Tp 0.87]
*
    READ STORM                 15.0
    [ Ptot= 88.54 mm ]
    fname : C:\Users\pchiocchio\AppData\Local\Temp\425a9a70-92a1-415b-a3e1-ac09acf5d6f2\c779bf9c-fd49-4135-b6f1-
    remark: 100 Year 12 Hour AES (Bloor, TRCA)
*
 ** CALIB NASHYD         0015  1  5.0    7.40    0.33  6.42  65.10 0.74   0.000
    [CN=94.0         ]
    [ N = 2.5:Tp 1.28]
*
    READ STORM                 15.0
    [ Ptot= 88.54 mm ]
    fname : C:\Users\pchiocchio\AppData\Local\Temp\425a9a70-92a1-415b-a3e1-ac09acf5d6f2\c779bf9c-fd49-4135-b6f1-
    remark: 100 Year 12 Hour AES (Bloor, TRCA)
*
 ** CALIB NASHYD         0105  1  5.0    6.60    0.29  6.42  65.10 0.74   0.000
    [CN=94.0         ]
    [ N = 2.5:Tp 1.28]
*
    ADD [  0105+  0013]  0012  3  5.0   14.02    0.63  6.33  65.10  n/a   0.000
*
    ADD [  0012+  0014]  0012  1  5.0   18.76    0.88  6.17  65.10  n/a   0.000
*
    ADD [  0012+  0015]  0012  3  5.0   26.16    1.21  6.25  65.10  n/a   0.000
*
    CHANNEL[ 2:  0012]   0093  1  5.0   26.16    1.20  6.42  65.10  n/a   0.000
*
    READ STORM                 15.0
    [ Ptot= 88.54 mm ]
    fname : C:\Users\pchiocchio\AppData\Local\Temp\425a9a70-92a1-415b-a3e1-ac09acf5d6f2\c779bf9c-fd49-4135-b6f1-
    remark: 100 Year 12 Hour AES (Bloor, TRCA)
*
 ** CALIB NASHYD         0039  1  5.0   13.25    0.57  6.50  65.10 0.74   0.000
    [CN=94.0         ]
    [ N = 2.5:Tp 1.35]
*
    ADD [  0039+  0093]  0051  3  5.0   39.41    1.76  6.42  65.10  n/a   0.000
*
    READ STORM                 15.0
    [ Ptot= 88.54 mm ]
    fname : C:\Users\pchiocchio\AppData\Local\Temp\425a9a70-92a1-415b-a3e1-ac09acf5d6f2\c779bf9c-fd49-4135-b6f1-
    remark: 100 Year 12 Hour AES (Bloor, TRCA)
*
 ** CALIB NASHYD         0040  1  5.0    7.26    0.33  6.33  65.10 0.74   0.000
    [CN=94.0         ]
    [ N = 2.5:Tp 1.23]
*
```

```
    READ STORM                 15.0
    [ Ptot= 88.54 mm ]
    fname : C:\Users\pchiocchio\AppData\Local\Temp\425a9a70-92a1-415b-a3e1-ac09acf5d6f2\c779bf9c-fd49-4135-b6f1-
    remark: 100 Year 12 Hour AES (Bloor, TRCA)
*
 ** CALIB NASHYD         0102  1  5.0    4.10    0.15  6.33  50.00 0.56   0.000
    [CN=85.0         ]
    [ N = 2.5:Tp 1.12]
*
    CHANNEL[ 2:  0102]   0101  1  5.0    4.10    0.14  6.75  50.00  n/a   0.000
*
    ADD [  0101+  0040]  0090  3  5.0   11.36    0.47  6.50  59.65  n/a   0.000
*
    ADD [  0090+  0051]  0090  1  5.0   50.77    2.23  6.42  63.88  n/a   0.000
*
    ADD [  0090+  0052]  0090  3  5.0   86.76    3.61  6.50  64.38  n/a   0.000
*
    ADD [  0090+  0053]  0090  1  5.0  117.73    4.66  6.58  62.57  n/a   0.000
*
    CHANNEL[ 2:  0090]   0095  1  5.0  117.73    4.65  6.67  62.57  n/a   0.000
*
    READ STORM                 15.0
    [ Ptot= 88.54 mm ]
    fname : C:\Users\pchiocchio\AppData\Local\Temp\425a9a70-92a1-415b-a3e1-ac09acf5d6f2\c779bf9c-fd49-4135-b6f1-
    remark: 100 Year 12 Hour AES (Bloor, TRCA)
*
 ** CALIB NASHYD         0041  1  5.0   12.70    0.63  6.17  65.10 0.74   0.000
    [CN=94.0         ]
    [ N = 2.5:Tp 1.08]
*
    ADD [  0041+  0095]  0050  3  5.0  130.43    5.23  6.67  62.82  n/a   0.000
*
    READ STORM                 15.0
    [ Ptot= 88.54 mm ]
    fname : C:\Users\pchiocchio\AppData\Local\Temp\425a9a70-92a1-415b-a3e1-ac09acf5d6f2\c779bf9c-fd49-4135-b6f1-
    remark: 100 Year 12 Hour AES (Bloor, TRCA)
*
 ** CALIB NASHYD         0047  1  5.0   71.95    2.36  7.33  67.11 0.76   0.000
    [CN=95.0         ]
    [ N = 2.5:Tp 2.04]
*
    ADD [  0047+  0050]  0054  3  5.0  202.38    7.48  6.75  64.35  n/a   0.000
*
    ADD [  0054+  0087]  0054  1  5.0  528.10   14.16  7.33  66.05  n/a   0.000
*
    CHANNEL[ 2:  0054]   0088  1  5.0  528.10   14.12  7.50  66.05  n/a   0.000
*
    READ STORM                 15.0
    [ Ptot= 88.54 mm ]
    fname : C:\Users\pchiocchio\AppData\Local\Temp\425a9a70-92a1-415b-a3e1-ac09acf5d6f2\c779bf9c-fd49-4135-b6f1-
    remark: 100 Year 12 Hour AES (Bloor, TRCA)
*
 ** CALIB NASHYD         0048  1  5.0   34.24    1.83  5.75  57.77 0.65   0.000
    [CN=90.0         ]
    [ N = 2.5:Tp 0.77]
*
    ADD [  0048+  0088]  0049  3  5.0  562.34   15.05  7.25  65.55  n/a   0.000
*
```

Macville Secondary Plan – Town of Caledon, Region of Peel
Visual OTTHYMO Hydrologic Model Schematic, January 2021, for 1st Submission
Scenario: Regional Storm, EXISTING

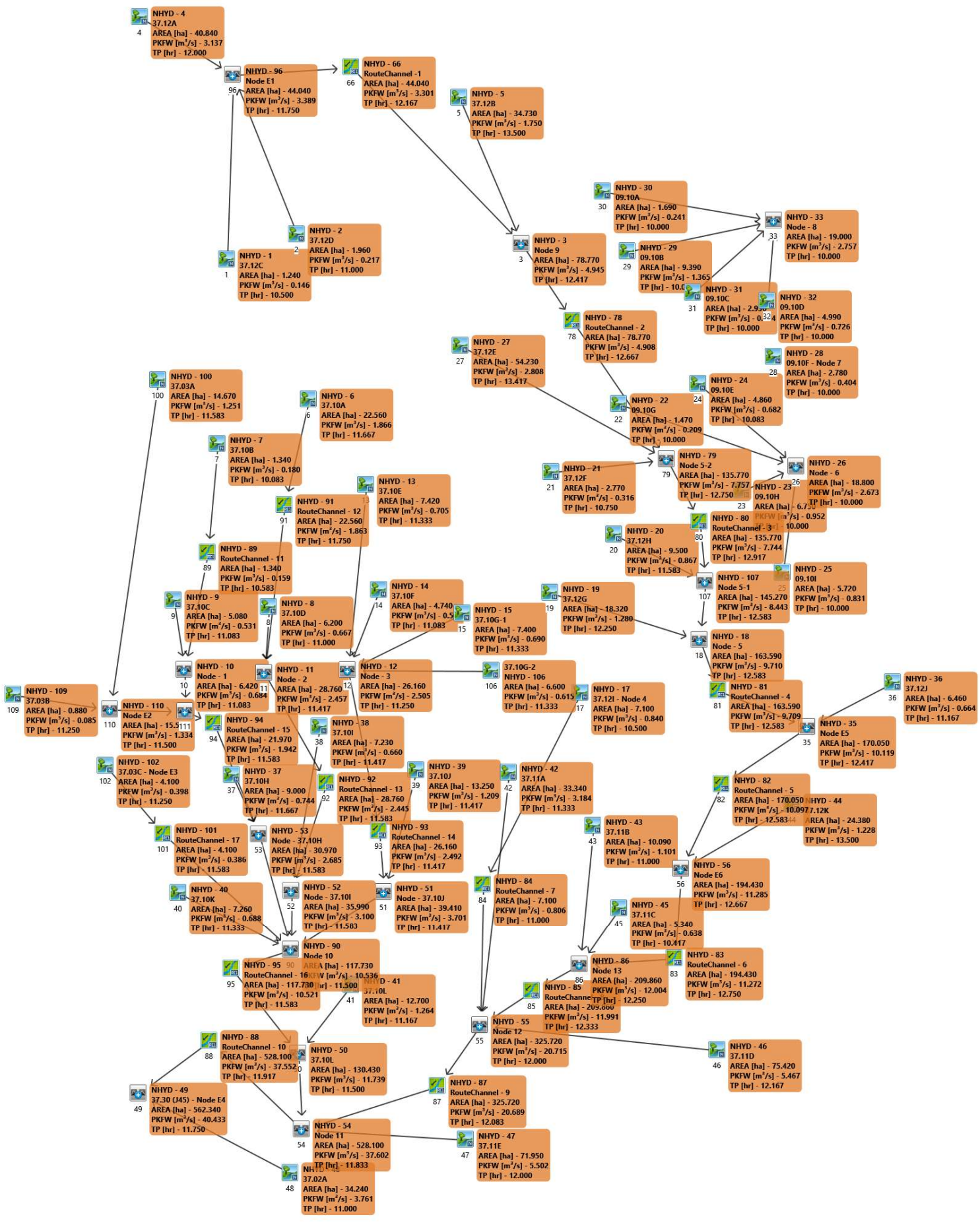

```
==========================================================================================

       V    V   I    SSSSS  U   U    A    L              (v 6.2.2001)
       V    V   I    SS     U   U   A A   L
        V  V    I     SS    U   U  AAAAA  L
        V  V    I      SS   U   U  A   A  L
         VV     I    SSSSS  UUUUU  A   A  LLLLL

        OOO   TTTTT  TTTTT  H   H  Y   Y  M   M   OOO    TM
       O   O    T      T    H   H   Y Y   MM MM  O   O
       O   O    T      T    H   H    Y    M   M  O   O
        OOO     T      T    H   H    Y    M   M   OOO
Developed and Distributed by Smart City Water Inc
Copyright 2007 - 2020 Smart City Water Inc
All rights reserved.


                  *****  S U M M A R Y   O U T P U T  *****


  Input   filename: C:\Program Files (x86)\Visual OTTHYMO 6.2\VO2\voin.dat
  Output  filename: C:\Users\pchiocchio\AppData\Local\Civica\VH5\d59fad6f-510d-48b8-a35a-1bee91f156cc\23535181-0602-46ec-93c9-
a4a06b15c29d\s
  Summary filename: C:\Users\pchiocchio\AppData\Local\Civica\VH5\d59fad6f-510d-48b8-a35a-1bee91f156cc\23535181-0602-46ec-93c9-
a4a06b15c29d\s


DATE: 02/02/2021                          TIME: 05:17:00

USER:


COMMENTS: ____________________________________________________________


  ************************************************
  ** SIMULATION : Regional                      **
  ************************************************

  W/E COMMAND             HYD ID   DT    AREA  ' Qpeak Tpeak   R.V. R.C.   Qbase
                                  min     ha   '  cms   hrs     mm          cms

      START @  0.00 hrs
      --------------------
    READ STORM                 60.0
    [ Ptot=212.00 mm ]
    fname : C:\Users\pchiocchio\AppData\Local\Temp\ec98dadc-62b5-4acd-ac5d-7d2c3239cc07\73109667-76aa-4771-ab3b-
    remark: HAZEL
*
 ** CALIB NASHYD         0022  1  5.0    1.47    0.21 10.00 194.24 0.92   0.000
    [CN=95.0         ]
    [ N = 3.0:Tp 0.10]
*
    READ STORM                 60.0
    [ Ptot=212.00 mm ]
    fname : C:\Users\pchiocchio\AppData\Local\Temp\ec98dadc-62b5-4acd-ac5d-7d2c3239cc07\73109667-76aa-4771-ab3b-
    remark: HAZEL
*
 ** CALIB NASHYD         0023  1  5.0    6.75    0.95 10.00 177.12 0.84   0.000
    [CN=90.0         ]
    [ N = 3.0:Tp 0.26]
*
    READ STORM                 60.0
    [ Ptot=212.00 mm ]
    fname : C:\Users\pchiocchio\AppData\Local\Temp\ec98dadc-62b5-4acd-ac5d-7d2c3239cc07\73109667-76aa-4771-ab3b-
    remark: HAZEL
*
 ** CALIB NASHYD         0024  1  5.0    4.86    0.68 10.08 199.38 0.94   0.000
    [CN=95.0         ]
    [ N = 3.0:Tp 0.34]
*
    READ STORM                 60.0
    [ Ptot=212.00 mm ]
    fname : C:\Users\pchiocchio\AppData\Local\Temp\ec98dadc-62b5-4acd-ac5d-7d2c3239cc07\73109667-76aa-4771-ab3b-
    remark: HAZEL
*
 ** CALIB NASHYD         0025  1  5.0    5.72    0.83 10.00 199.20 0.94   0.000
    [CN=95.0         ]
    [ N = 3.0:Tp 0.23]
*
    ADD [  0022+  0023]  0026  3  5.0    8.22    1.16 10.00 180.18  n/a   0.000
*
    ADD [  0026+  0024]  0026  1  5.0   13.08    1.84 10.00 187.31  n/a   0.000
*
    ADD [  0026+  0025]  0026  3  5.0   18.80    2.67 10.00 190.93  n/a   0.000
*
    READ STORM                 60.0
    [ Ptot=212.00 mm ]
    fname : C:\Users\pchiocchio\AppData\Local\Temp\ec98dadc-62b5-4acd-ac5d-7d2c3239cc07\73109667-76aa-4771-ab3b-
    remark: HAZEL
*
 ** CALIB NASHYD         0028  1  5.0    2.78    0.40 10.00 199.20 0.94   0.000
    [CN=95.0         ]
    [ N = 3.0:Tp 0.23]
```

```
*
    READ STORM                 60.0
    [ Ptot=212.00 mm ]
    fname : C:\Users\pchiocchio\AppData\Local\Temp\ec98dadc-62b5-4acd-ac5d-7d2c3239cc07\73109667-76aa-4771-ab3b-
    remark: HAZEL
*
 ** CALIB NASHYD         0029  1  5.0    9.39    1.37 10.00 198.27 0.94   0.000
    [CN=95.0         ]
    [ N = 3.0:Tp 0.15]
*
    READ STORM                 60.0
    [ Ptot=212.00 mm ]
    fname : C:\Users\pchiocchio\AppData\Local\Temp\ec98dadc-62b5-4acd-ac5d-7d2c3239cc07\73109667-76aa-4771-ab3b-
    remark: HAZEL
*
 ** CALIB NASHYD         0030  1  5.0    1.69    0.24 10.00 194.24 0.92   0.000
    [CN=95.0         ]
    [ N = 3.0:Tp 0.10]
*
    READ STORM                 60.0
    [ Ptot=212.00 mm ]
    fname : C:\Users\pchiocchio\AppData\Local\Temp\ec98dadc-62b5-4acd-ac5d-7d2c3239cc07\73109667-76aa-4771-ab3b-
    remark: HAZEL
*
 ** CALIB NASHYD         0031  1  5.0    2.93    0.42 10.00 197.45 0.93   0.000
    [CN=95.0         ]
    [ N = 3.0:Tp 0.13]
*
    READ STORM                 60.0
    [ Ptot=212.00 mm ]
    fname : C:\Users\pchiocchio\AppData\Local\Temp\ec98dadc-62b5-4acd-ac5d-7d2c3239cc07\73109667-76aa-4771-ab3b-
    remark: HAZEL
*
 ** CALIB NASHYD         0032  1  5.0    4.99    0.73 10.00 198.53 0.94   0.000
    [CN=95.0         ]
    [ N = 3.0:Tp 0.16]
*
    ADD [  0029+  0030]  0033  3  5.0   11.08    1.61 10.00 197.66  n/a   0.000
*
    ADD [  0033+  0031]  0033  1  5.0   14.01    2.03 10.00 197.62  n/a   0.000
*
    ADD [  0033+  0032]  0033  3  5.0   19.00    2.76 10.00 197.85  n/a   0.000
*
    READ STORM                 60.0
    [ Ptot=212.00 mm ]
    fname : C:\Users\pchiocchio\AppData\Local\Temp\ec98dadc-62b5-4acd-ac5d-7d2c3239cc07\73109667-76aa-4771-ab3b-
    remark: HAZEL
*
 ** CALIB NASHYD         0001  1  5.0    1.24    0.15 10.50 206.85 0.98   0.000
    [CN=98.0         ]
    [ N = 2.5:Tp 0.59]
*
    READ STORM                 60.0
    [ Ptot=212.00 mm ]
    fname : C:\Users\pchiocchio\AppData\Local\Temp\ec98dadc-62b5-4acd-ac5d-7d2c3239cc07\73109667-76aa-4771-ab3b-
    remark: HAZEL
*
 ** CALIB NASHYD         0002  1  5.0    1.96    0.22 11.00 206.90 0.98   0.000
    [CN=98.0         ]
    [ N = 2.5:Tp 0.77]
*
    READ STORM                 60.0
    [ Ptot=212.00 mm ]
    fname : C:\Users\pchiocchio\AppData\Local\Temp\ec98dadc-62b5-4acd-ac5d-7d2c3239cc07\73109667-76aa-4771-ab3b-
    remark: HAZEL
*
 ** CALIB NASHYD         0004  1  5.0   40.84    3.14 12.00 206.94 0.98   0.000
    [CN=98.0         ]
    [ N = 2.5:Tp 2.02]
*
    ADD [  0001+  0002]  0096  3  5.0    3.20    0.36 10.75 206.88  n/a   0.000
*
    ADD [  0096+  0004]  0096  1  5.0   44.04    3.39 11.75 206.93  n/a   0.000
*
    CHANNEL[ 2:  0096]   0066  1  5.0   44.04    3.30 12.17 206.93  n/a   0.000
*
    READ STORM                 60.0
    [ Ptot=212.00 mm ]
    fname : C:\Users\pchiocchio\AppData\Local\Temp\ec98dadc-62b5-4acd-ac5d-7d2c3239cc07\73109667-76aa-4771-ab3b-
    remark: HAZEL
*
 ** CALIB NASHYD         0005  1  5.0   34.73    1.75 13.50 206.94 0.98   0.000
    [CN=98.0         ]
    [ N = 2.5:Tp 4.29]
*
    ADD [  0005+  0066]  0003  3  5.0   78.77    4.95 12.42 206.94  n/a   0.000
*
    CHANNEL[ 2:  0003]   0078  1  5.0   78.77    4.91 12.67 206.94  n/a   0.000
*
    READ STORM                 60.0
    [ Ptot=212.00 mm ]
    fname : C:\Users\pchiocchio\AppData\Local\Temp\ec98dadc-62b5-4acd-ac5d-7d2c3239cc07\73109667-76aa-4771-ab3b-
    remark: HAZEL
*
 ** CALIB NASHYD         0021  1  5.0    2.77    0.32 10.75 206.88 0.98   0.000
```

```
    [CN=98.0         ]
    [ N = 2.5:Tp 0.67]
*
    READ STORM                 60.0
    [ Ptot=212.00 mm ]
    fname : C:\Users\pchiocchio\AppData\Local\Temp\ec98dadc-62b5-4acd-ac5d-7d2c3239cc07\73109667-76aa-4771-ab3b-
    remark: HAZEL
*
 ** CALIB NASHYD         0027  1  5.0   54.23    2.81 13.42 206.94 0.98   0.000
    [CN=98.0         ]
    [ N = 2.5:Tp 4.12]
*
    ADD [  0021+  0027]  0079  3  5.0   57.00    2.86 13.00 206.94  n/a   0.000
*
    ADD [  0079+  0078]  0079  1  5.0  135.77    7.76 12.75 206.94  n/a   0.000
*
    CHANNEL[ 2:  0079]   0080  1  5.0  135.77    7.74 12.92 206.94  n/a   0.000
*
    READ STORM                 60.0
    [ Ptot=212.00 mm ]
    fname : C:\Users\pchiocchio\AppData\Local\Temp\ec98dadc-62b5-4acd-ac5d-7d2c3239cc07\73109667-76aa-4771-ab3b-
    remark: HAZEL
*
 ** CALIB NASHYD         0020  1  5.0    9.50    0.87 11.58 206.94 0.98   0.000
    [CN=98.0         ]
    [ N = 3.0:Tp 1.59]
*
    ADD [  0020+  0080]  0107  3  5.0  145.27    8.44 12.58 206.94  n/a   0.000
*
    READ STORM                 60.0
    [ Ptot=212.00 mm ]
    fname : C:\Users\pchiocchio\AppData\Local\Temp\ec98dadc-62b5-4acd-ac5d-7d2c3239cc07\73109667-76aa-4771-ab3b-
    remark: HAZEL
*
 ** CALIB NASHYD         0019  1  5.0   18.32    1.28 12.25 206.94 0.98   0.000
    [CN=98.0         ]
    [ N = 2.5:Tp 2.47]
*
    ADD [  0107+  0019]  0018  3  5.0  163.59    9.71 12.58 206.94  n/a   0.000
*
    CHANNEL[ 2:  0018]   0081  1  5.0  163.59    9.71 12.58 206.94  n/a   0.000
*
    READ STORM                 60.0
    [ Ptot=212.00 mm ]
    fname : C:\Users\pchiocchio\AppData\Local\Temp\ec98dadc-62b5-4acd-ac5d-7d2c3239cc07\73109667-76aa-4771-ab3b-
    remark: HAZEL
*
 ** CALIB NASHYD         0036  1  5.0    6.46    0.66 11.17 206.92 0.98   0.000
    [CN=98.0         ]
    [ N = 2.5:Tp 0.99]
*
    ADD [  0036+  0081]  0035  3  5.0  170.05   10.12 12.42 206.94  n/a   0.000
*
    CHANNEL[ 2:  0035]   0082  1  5.0  170.05   10.10 12.58 206.94  n/a   0.000
*
    READ STORM                 60.0
    [ Ptot=212.00 mm ]
    fname : C:\Users\pchiocchio\AppData\Local\Temp\ec98dadc-62b5-4acd-ac5d-7d2c3239cc07\73109667-76aa-4771-ab3b-
    remark: HAZEL
*
 ** CALIB NASHYD         0044  1  5.0   24.38    1.23 13.50 206.94 0.98   0.000
    [CN=98.0         ]
    [ N = 2.5:Tp 4.29]
*
    ADD [  0044+  0082]  0056  3  5.0  194.43   11.29 12.67 206.94  n/a   0.000
*
    CHANNEL[ 2:  0056]   0083  1  5.0  194.43   11.27 12.75 206.94  n/a   0.000
*
    READ STORM                 60.0
    [ Ptot=212.00 mm ]
    fname : C:\Users\pchiocchio\AppData\Local\Temp\ec98dadc-62b5-4acd-ac5d-7d2c3239cc07\73109667-76aa-4771-ab3b-
    remark: HAZEL
*
 ** CALIB NASHYD         0043  1  5.0   10.09    1.10 11.00 206.90 0.98   0.000
    [CN=98.0         ]
    [ N = 2.5:Tp 0.81]
*
    READ STORM                 60.0
    [ Ptot=212.00 mm ]
    fname : C:\Users\pchiocchio\AppData\Local\Temp\ec98dadc-62b5-4acd-ac5d-7d2c3239cc07\73109667-76aa-4771-ab3b-
    remark: HAZEL
*
 ** CALIB NASHYD         0045  1  5.0    5.34    0.64 10.42 206.84 0.98   0.000
    [CN=98.0         ]
    [ N = 2.5:Tp 0.56]
*
    ADD [  0043+  0045]  0086  3  5.0   15.43    1.71 10.83 206.88  n/a   0.000
*
    ADD [  0086+  0083]  0086  1  5.0  209.86   12.00 12.25 206.93  n/a   0.000
*
    CHANNEL[ 2:  0086]   0085  1  5.0  209.86   11.99 12.33 206.93  n/a   0.000
*
    READ STORM                 60.0
    [ Ptot=212.00 mm ]
    fname : C:\Users\pchiocchio\AppData\Local\Temp\ec98dadc-62b5-4acd-ac5d-7d2c3239cc07\73109667-76aa-4771-ab3b-
```

```
    remark: HAZEL
*
 ** CALIB NASHYD         0017  1  5.0    7.10    0.84 10.50 206.85 0.98   0.000
    [CN=98.0         ]
    [ N = 2.5:Tp 0.58]
*
    CHANNEL[ 2:  0017]   0084  1  5.0    7.10    0.81 11.00 206.81  n/a   0.000
*
    READ STORM                 60.0
    [ Ptot=212.00 mm ]
    fname : C:\Users\pchiocchio\AppData\Local\Temp\ec98dadc-62b5-4acd-ac5d-7d2c3239cc07\73109667-76aa-4771-ab3b-
    remark: HAZEL
*
 ** CALIB NASHYD         0042  1  5.0   33.34    3.18 11.33 206.93 0.98   0.000
    [CN=98.0         ]
    [ N = 2.5:Tp 1.21]
*
    READ STORM                 60.0
    [ Ptot=212.00 mm ]
    fname : C:\Users\pchiocchio\AppData\Local\Temp\ec98dadc-62b5-4acd-ac5d-7d2c3239cc07\73109667-76aa-4771-ab3b-
    remark: HAZEL
*
 ** CALIB NASHYD         0046  1  5.0   75.42    5.47 12.17 206.94 0.98   0.000
    [CN=98.0         ]
    [ N = 2.5:Tp 2.29]
*
    ADD [  0042+  0046]  0055  3  5.0  108.76    8.43 11.67 206.93  n/a   0.000
*
    ADD [  0055+  0084]  0055  1  5.0  115.86    9.13 11.50 206.93  n/a   0.000
*
    ADD [  0055+  0085]  0055  3  5.0  325.72   20.71 12.00 206.93  n/a   0.000
*
    CHANNEL[ 2:  0055]   0087  1  5.0  325.72   20.69 12.08 206.93  n/a   0.000
*
    READ STORM                 60.0
    [ Ptot=212.00 mm ]
    fname : C:\Users\pchiocchio\AppData\Local\Temp\ec98dadc-62b5-4acd-ac5d-7d2c3239cc07\73109667-76aa-4771-ab3b-
    remark: HAZEL
*
 ** CALIB NASHYD         0006  1  5.0   22.56    1.87 11.67 204.42 0.96   0.000
    [CN=97.0         ]
    [ N = 2.5:Tp 1.70]
*
    CHANNEL[ 2:  0006]   0091  1  5.0   22.56    1.86 11.75 204.42  n/a   0.000
*
    READ STORM                 60.0
    [ Ptot=212.00 mm ]
    fname : C:\Users\pchiocchio\AppData\Local\Temp\ec98dadc-62b5-4acd-ac5d-7d2c3239cc07\73109667-76aa-4771-ab3b-
    remark: HAZEL
*
 ** CALIB NASHYD         0008  1  5.0    6.20    0.67 11.00 204.39 0.96   0.000
    [CN=97.0         ]
    [ N = 2.5:Tp 0.85]
*
    ADD [  0008+  0091]  0011  3  5.0   28.76    2.46 11.42 204.41  n/a   0.000
*
    CHANNEL[ 2:  0011]   0092  1  5.0   28.76    2.44 11.58 204.41  n/a   0.000
*
    READ STORM                 60.0
    [ Ptot=212.00 mm ]
    fname : C:\Users\pchiocchio\AppData\Local\Temp\ec98dadc-62b5-4acd-ac5d-7d2c3239cc07\73109667-76aa-4771-ab3b-
    remark: HAZEL
*
 ** CALIB NASHYD         0038  1  5.0    7.23    0.66 11.42 204.41 0.96   0.000
    [CN=97.0         ]
    [ N = 2.5:Tp 1.35]
*
    ADD [  0038+  0092]  0052  3  5.0   35.99    3.10 11.58 204.41  n/a   0.000
*
    READ STORM                 60.0
    [ Ptot=212.00 mm ]
    fname : C:\Users\pchiocchio\AppData\Local\Temp\ec98dadc-62b5-4acd-ac5d-7d2c3239cc07\73109667-76aa-4771-ab3b-
    remark: HAZEL
*
 ** CALIB NASHYD         0007  1  5.0    1.34    0.18 10.08 204.12 0.96   0.000
    [CN=97.0         ]
    [ N = 2.5:Tp 0.36]
*
    CHANNEL[ 2:  0007]   0089  1  5.0    1.34    0.16 10.58 203.95  n/a   0.000
*
    READ STORM                 60.0
    [ Ptot=212.00 mm ]
    fname : C:\Users\pchiocchio\AppData\Local\Temp\ec98dadc-62b5-4acd-ac5d-7d2c3239cc07\73109667-76aa-4771-ab3b-
    remark: HAZEL
*
 ** CALIB NASHYD         0009  1  5.0    5.08    0.53 11.08 204.40 0.96   0.000
    [CN=97.0         ]
    [ N = 2.5:Tp 0.94]
*
    ADD [  0089+  0009]  0010  3  5.0    6.42    0.68 11.08 204.31  n/a   0.000
*
    READ STORM                 60.0
    [ Ptot=212.00 mm ]
    fname : C:\Users\pchiocchio\AppData\Local\Temp\ec98dadc-62b5-4acd-ac5d-7d2c3239cc07\73109667-76aa-4771-ab3b-
    remark: HAZEL
```

```
*
 ** CALIB NASHYD         0100  1  5.0   14.67    1.25 11.58 194.46 0.92   0.000
    [CN=93.0         ]
    [ N = 2.5:Tp 1.53]
*
    READ STORM                 60.0
    [ Ptot=212.00 mm ]
    fname : C:\Users\pchiocchio\AppData\Local\Temp\ec98dadc-62b5-4acd-ac5d-7d2c3239cc07\73109667-76aa-4771-ab3b-
    remark: HAZEL
*
 ** CALIB NASHYD         0109  1  5.0    0.88    0.09 11.25 194.44 0.92   0.000
    [CN=93.0         ]
    [ N = 2.5:Tp 1.12]
*
    ADD [  0100+  0109]  0110  3  5.0   15.55    1.33 11.50 194.46  n/a   0.000
*
    ADD [  0010+  0110]  0111  3  5.0   21.97    1.99 11.25 197.33  n/a   0.000
*
    CHANNEL[ 2:  0111]   0094  1  5.0   21.97    1.94 11.58 197.33  n/a   0.000
*
    READ STORM                 60.0
    [ Ptot=212.00 mm ]
    fname : C:\Users\pchiocchio\AppData\Local\Temp\ec98dadc-62b5-4acd-ac5d-7d2c3239cc07\73109667-76aa-4771-ab3b-
    remark: HAZEL
*
 ** CALIB NASHYD         0037  1  5.0    9.00    0.74 11.67 204.42 0.96   0.000
    [CN=97.0         ]
    [ N = 2.5:Tp 1.70]
*
    ADD [  0037+  0094]  0053  3  5.0   30.97    2.69 11.58 199.39  n/a   0.000
*
    READ STORM                 60.0
    [ Ptot=212.00 mm ]
    fname : C:\Users\pchiocchio\AppData\Local\Temp\ec98dadc-62b5-4acd-ac5d-7d2c3239cc07\73109667-76aa-4771-ab3b-
    remark: HAZEL
*
 ** CALIB NASHYD         0013  1  5.0    7.42    0.71 11.33 204.41 0.96   0.000
    [CN=97.0         ]
    [ N = 2.5:Tp 1.22]
*
    READ STORM                 60.0
    [ Ptot=212.00 mm ]
    fname : C:\Users\pchiocchio\AppData\Local\Temp\ec98dadc-62b5-4acd-ac5d-7d2c3239cc07\73109667-76aa-4771-ab3b-
    remark: HAZEL
*
 ** CALIB NASHYD         0014  1  5.0    4.74    0.51 11.08 204.39 0.96   0.000
    [CN=97.0         ]
    [ N = 2.5:Tp 0.87]
*
    READ STORM                 60.0
    [ Ptot=212.00 mm ]
    fname : C:\Users\pchiocchio\AppData\Local\Temp\ec98dadc-62b5-4acd-ac5d-7d2c3239cc07\73109667-76aa-4771-ab3b-
    remark: HAZEL
*
 ** CALIB NASHYD         0015  1  5.0    7.40    0.69 11.33 204.41 0.96   0.000
    [CN=97.0         ]
    [ N = 2.5:Tp 1.28]
*
    READ STORM                 60.0
    [ Ptot=212.00 mm ]
    fname : C:\Users\pchiocchio\AppData\Local\Temp\ec98dadc-62b5-4acd-ac5d-7d2c3239cc07\73109667-76aa-4771-ab3b-
    remark: HAZEL
*
 ** CALIB NASHYD         0106  1  5.0    6.60    0.61 11.33 194.43 0.92   0.000
    [CN=97.0         ]
    [ N = 2.5:Tp 1.28]
*
    ADD [  0106+  0013]  0012  3  5.0   14.02    1.32 11.33 199.71  n/a   0.000
*
    ADD [  0012+  0014]  0012  1  5.0   18.76    1.82 11.25 200.89  n/a   0.000
*
    ADD [  0012+  0015]  0012  3  5.0   26.16    2.51 11.25 201.89  n/a   0.000
*
    CHANNEL[ 2:  0012]   0093  1  5.0   26.16    2.49 11.42 201.89  n/a   0.000
*
    READ STORM                 60.0
    [ Ptot=212.00 mm ]
    fname : C:\Users\pchiocchio\AppData\Local\Temp\ec98dadc-62b5-4acd-ac5d-7d2c3239cc07\73109667-76aa-4771-ab3b-
    remark: HAZEL
*
 ** CALIB NASHYD         0039  1  5.0   13.25    1.21 11.42 204.41 0.96   0.000
    [CN=97.0         ]
    [ N = 2.5:Tp 1.35]
*
    ADD [  0039+  0093]  0051  3  5.0   39.41    3.70 11.42 202.74  n/a   0.000
*
    READ STORM                 60.0
    [ Ptot=212.00 mm ]
    fname : C:\Users\pchiocchio\AppData\Local\Temp\ec98dadc-62b5-4acd-ac5d-7d2c3239cc07\73109667-76aa-4771-ab3b-
    remark: HAZEL
*
 ** CALIB NASHYD         0040  1  5.0    7.26    0.69 11.33 204.41 0.96   0.000
    [CN=97.0         ]
    [ N = 2.5:Tp 1.23]
*
```

```
    READ STORM                 60.0
    [ Ptot=212.00 mm ]
    fname : C:\Users\pchiocchio\AppData\Local\Temp\ec98dadc-62b5-4acd-ac5d-7d2c3239cc07\73109667-76aa-4771-ab3b-
    remark: HAZEL
*
 ** CALIB NASHYD         0102  1  5.0    4.10    0.40 11.25 194.45 0.92   0.000
    [CN=93.0         ]
    [ N = 2.5:Tp 1.12]
*
    CHANNEL[ 2:  0102]   0101  1  5.0    4.10    0.39 11.58 194.45  n/a   0.000
*
    ADD [  0101+  0040]  0090  3  5.0   11.36    1.07 11.42 200.82  n/a   0.000
*
    ADD [  0090+  0051]  0090  1  5.0   50.77    4.77 11.42 202.31  n/a   0.000
*
    ADD [  0090+  0052]  0090  3  5.0   86.76    7.86 11.42 203.18  n/a   0.000
*
    ADD [  0090+  0053]  0090  1  5.0  117.73   10.54 11.50 202.18  n/a   0.000
*
    CHANNEL[ 2:  0090]   0095  1  5.0  117.73   10.52 11.58 202.18  n/a   0.000
*
    READ STORM                 60.0
    [ Ptot=212.00 mm ]
    fname : C:\Users\pchiocchio\AppData\Local\Temp\ec98dadc-62b5-4acd-ac5d-7d2c3239cc07\73109667-76aa-4771-ab3b-
    remark: HAZEL
*
 ** CALIB NASHYD         0041  1  5.0   12.70    1.26 11.17 204.41 0.96   0.000
    [CN=97.0         ]
    [ N = 2.5:Tp 1.08]
*
    ADD [  0041+  0095]  0050  3  5.0  130.43   11.74 11.50 202.40  n/a   0.000
*
    READ STORM                 60.0
    [ Ptot=212.00 mm ]
    fname : C:\Users\pchiocchio\AppData\Local\Temp\ec98dadc-62b5-4acd-ac5d-7d2c3239cc07\73109667-76aa-4771-ab3b-
    remark: HAZEL
*
 ** CALIB NASHYD         0047  1  5.0   71.95    5.50 12.00 206.94 0.98   0.000
    [CN=98.0         ]
    [ N = 2.5:Tp 2.04]
*
    ADD [  0047+  0050]  0054  3  5.0  202.38   17.15 11.58 204.01  n/a   0.000
*
    ADD [  0054+  0087]  0054  1  5.0  528.10   37.60 11.83 205.81  n/a   0.000
*
    CHANNEL[ 2:  0054]   0088  1  5.0  528.10   37.55 11.92 205.81  n/a   0.000
*
    READ STORM                 60.0
    [ Ptot=212.00 mm ]
    fname : C:\Users\pchiocchio\AppData\Local\Temp\ec98dadc-62b5-4acd-ac5d-7d2c3239cc07\73109667-76aa-4771-ab3b-
    remark: HAZEL
*
 ** CALIB NASHYD         0048  1  5.0   34.24    3.76 11.00 199.38 0.94   0.000
    [CN=95.0         ]
    [ N = 2.5:Tp 0.77]
*
    ADD [  0048+  0088]  0049  3  5.0  562.34   40.43 11.75 205.42  n/a   0.000
*
 FINISH

==========================================================================================================
```

Macville Secondary Plan – Town of Caledon, Region of Peel
Visual OTTHYMO Hydrologic Model Schematic, January 2021, for 1st Submission
Scenario: 25mm to 5-Year Storm, PROPOSED
(Results for 5-Year storm with 12-hour AES distribution shown in Schematic)

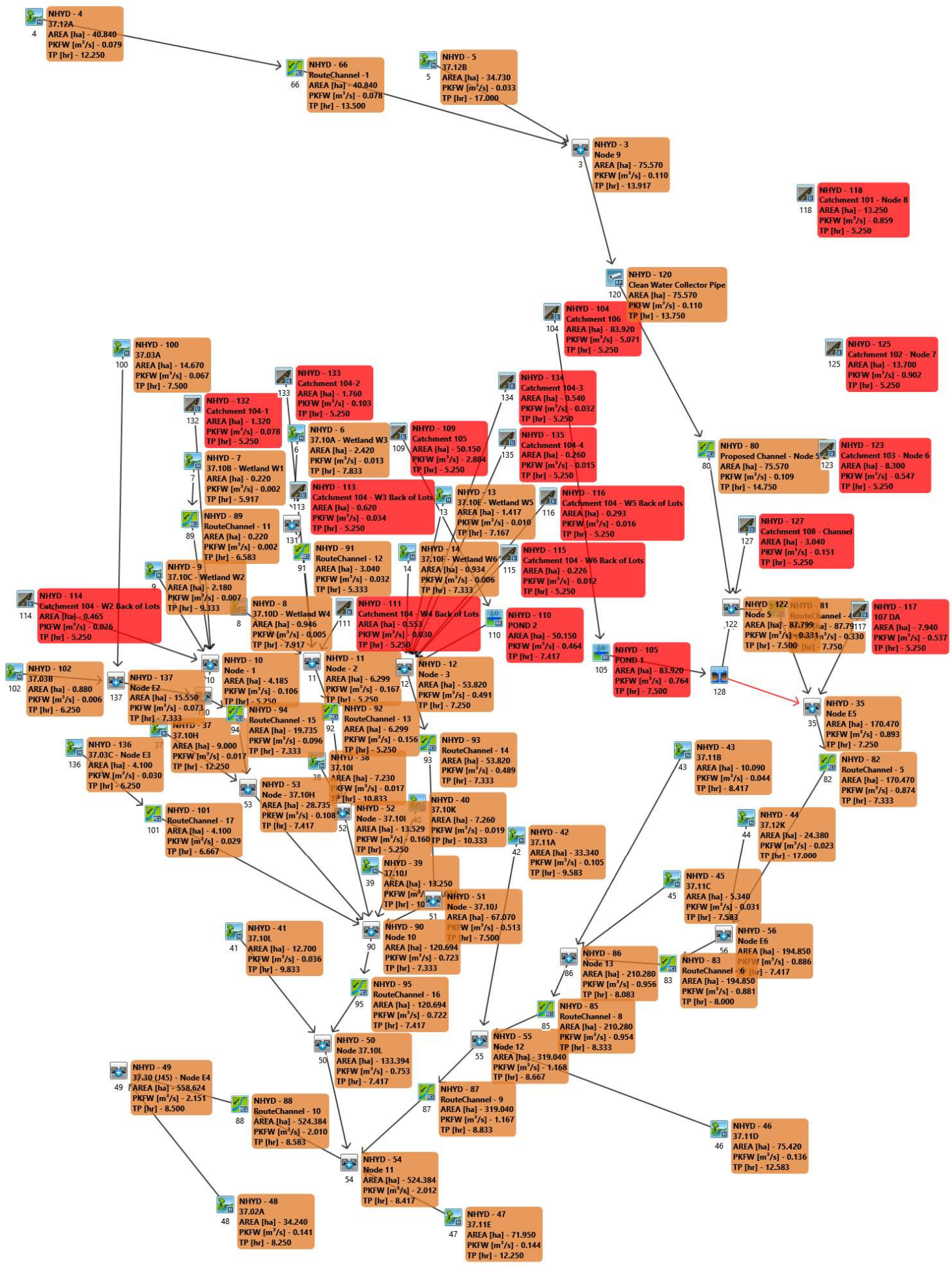

```
==========================================================================================

       V    V   I    SSSSS  U   U    A    L             (v 6.2.2001)
       V    V   I    SS     U   U   A A   L
        V  V    I     SS    U   U  AAAAA  L
        V  V    I      SS   U   U  A   A  L
         VV     I    SSSSS  UUUUU  A   A  LLLLL

        OOO   TTTTT  TTTTT  H   H  Y   Y  M   M   OOO    TM
       O   O    T      T    H   H   Y Y   MM MM  O   O
       O   O    T      T    H   H    Y    M   M  O   O
        OOO     T      T    H   H    Y    M   M   OOO
Developed and Distributed by Smart City Water Inc
Copyright 2007 - 2020 Smart City Water Inc
All rights reserved.


                  *****  S U M M A R Y   O U T P U T  *****


  Input   filename: C:\Program Files (x86)\Visual OTTHYMO 6.2\VO2\voin.dat
  Output  filename: C:\Users\pchiocchio\AppData\Local\Civica\VH5\d59fad6f-510d-48b8-a35a-1bee91f156cc\f742cb92-7a29-4cbb-8a81-
5253a0c661c6\s
  Summary filename: C:\Users\pchiocchio\AppData\Local\Civica\VH5\d59fad6f-510d-48b8-a35a-1bee91f156cc\f742cb92-7a29-4cbb-8a81-
5253a0c661c6\s


DATE: 02/02/2021                          TIME: 05:18:34

USER:


COMMENTS: ____________________________________________________________


  ************************************************
  ** SIMULATION : 25mm                          **
  ************************************************

  W/E COMMAND             HYD ID   DT    AREA  ' Qpeak Tpeak   R.V. R.C.   Qbase
                                  min     ha   '  cms   hrs     mm          cms

      START @  0.00 hrs
      --------------------
    READ STORM                 10.0
    [ Ptot= 25.00 mm ]
    fname : C:\Users\pchiocchio\AppData\Local\Temp\3c91563b-7bef-4116-8770-530a22aa1648\97451176-a954-4555-8422-
    remark: 25MM4HRC_10min Edited 2012
*
 ** CALIB NASHYD         0004  1  5.0   40.84    0.01  7.58   2.25 0.09   0.000
    [CN=75.0         ]
    [ N = 1.5:Tp 5.06]
*
    CHANNEL[ 2:  0004]   0066  1  5.0   40.84    0.01  9.33   2.26  n/a   0.000
*
    READ STORM                 10.0
    [ Ptot= 25.00 mm ]
    fname : C:\Users\pchiocchio\AppData\Local\Temp\3c91563b-7bef-4116-8770-530a22aa1648\97451176-a954-4555-8422-
    remark: 25MM4HRC_10min Edited 2012
*
 ** CALIB NASHYD         0005  1  5.0   34.73    0.00 13.17   2.13 0.09   0.000
    [CN=75.0         ]
    [ N = 1.5:Tp10.71]
*
    ADD [  0005+  0066]  0003  3  5.0   75.57    0.02  9.83   2.25  n/a   0.000
*
    PIPE   [ 2:  0003]   0120  1  5.0   75.57    0.02 10.33   2.25  n/a   0.000
*
    CHANNEL[ 2:  0120]   0080  1  5.0   75.57    0.02 11.33   2.25  n/a   0.000
*
    READ STORM                 10.0
    [ Ptot= 25.00 mm ]
    fname : C:\Users\pchiocchio\AppData\Local\Temp\3c91563b-7bef-4116-8770-530a22aa1648\97451176-a954-4555-8422-
    remark: 25MM4HRC_10min Edited 2012
*
 ** CALIB STANDHYD       0104  1  5.0   83.92    4.97  1.67  20.49 0.82   0.000
    [I%=78.0:S%= 2.00]
*
 ** Reservoir
    OUTFLOW:             0105  1  5.0   83.92    0.06  4.75  17.65  n/a   0.000
*
    DUHYD                0128  1  5.0   83.92    0.06  4.75  17.65  n/a   0.000
       MAJOR SYSTEM:     0128  2  5.0    0.00    0.00  0.00   0.00  n/a   0.000
       MINOR SYSTEM:     0128  3  5.0   83.92    0.06  4.75  17.65  n/a   0.000
*
    READ STORM                 10.0
    [ Ptot= 25.00 mm ]
    fname : C:\Users\pchiocchio\AppData\Local\Temp\3c91563b-7bef-4116-8770-530a22aa1648\97451176-a954-4555-8422-
    remark: 25MM4HRC_10min Edited 2012
*
 *  CALIB STANDHYD       0127  1  5.0    3.04    0.14  1.50  13.49 0.54   0.000
    [I%=34.0:S%= 2.00]
*
    ADD [  0127+  0128]  0122  3  5.0    3.04    0.14  1.50  13.49  n/a   0.000
```

```
*
    ADD [  0122+  0080]  0122  1  5.0   78.61    0.14  1.50   2.69  n/a   0.000
*
    CHANNEL[ 2:  0122]   0081  1  5.0   78.61    0.08  1.58   2.69  n/a   0.000
*
    READ STORM                 10.0
    [ Ptot= 25.00 mm ]
    fname : C:\Users\pchiocchio\AppData\Local\Temp\3c91563b-7bef-4116-8770-530a22aa1648\97451176-a954-4555-8422-
    remark: 25MM4HRC_10min Edited 2012
*
 *  CALIB STANDHYD       0117  1  5.0    7.94    0.91  1.50  22.88 0.92   0.000
    [I%=93.0:S%= 2.00]
*
    ADD [  0117+  0128]  0035  3  5.0   91.86    0.91  1.50  18.10  n/a   0.000
*
    ADD [  0035+  0081]  0035  1  5.0  170.47    0.99  1.50  10.99  n/a   0.000
*
    CHANNEL[ 2:  0035]   0082  1  5.0  170.47    0.39  1.75  10.98  n/a   0.000
*
    READ STORM                 10.0
    [ Ptot= 25.00 mm ]
    fname : C:\Users\pchiocchio\AppData\Local\Temp\3c91563b-7bef-4116-8770-530a22aa1648\97451176-a954-4555-8422-
    remark: 25MM4HRC_10min Edited 2012
*
 *  CALIB NASHYD         0044  1  5.0   24.38    0.00 13.25   2.13 0.09   0.000
    [CN=75.0         ]
    [ N = 1.5:Tp10.73]
*
    ADD [  0044+  0082]  0056  3  5.0  194.85    0.39  1.75   9.89  n/a   0.000
*
    CHANNEL[ 2:  0056]   0083  1  5.0  194.85    0.27  2.25   9.88  n/a   0.000
*
    READ STORM                 10.0
    [ Ptot= 25.00 mm ]
    fname : C:\Users\pchiocchio\AppData\Local\Temp\3c91563b-7bef-4116-8770-530a22aa1648\97451176-a954-4555-8422-
    remark: 25MM4HRC_10min Edited 2012
*
 *  CALIB NASHYD         0043  1  5.0   10.09    0.01  4.75   2.36 0.09   0.000
    [CN=76.0         ]
    [ N = 1.5:Tp 2.02]
*
    READ STORM                 10.0
    [ Ptot= 25.00 mm ]
    fname : C:\Users\pchiocchio\AppData\Local\Temp\3c91563b-7bef-4116-8770-530a22aa1648\97451176-a954-4555-8422-
    remark: 25MM4HRC_10min Edited 2012
*
 *  CALIB NASHYD         0045  1  5.0    5.34    0.01  4.25   2.36 0.09   0.000
    [CN=76.0         ]
    [ N = 1.5:Tp 1.39]
*
    ADD [  0043+  0045]  0086  3  5.0   15.43    0.01  4.50   2.36  n/a   0.000
*
    ADD [  0086+  0083]  0086  1  5.0  210.28    0.27  2.25   9.32  n/a   0.000
*
    CHANNEL[ 2:  0086]   0085  1  5.0  210.28    0.25  2.67   9.32  n/a   0.000
*
    READ STORM                 10.0
    [ Ptot= 25.00 mm ]
    fname : C:\Users\pchiocchio\AppData\Local\Temp\3c91563b-7bef-4116-8770-530a22aa1648\97451176-a954-4555-8422-
    remark: 25MM4HRC_10min Edited 2012
*
 *  CALIB NASHYD         0042  1  5.0   33.34    0.02  5.67   2.36 0.09   0.000
    [CN=76.0         ]
    [ N = 1.5:Tp 3.02]
*
    READ STORM                 10.0
    [ Ptot= 25.00 mm ]
    fname : C:\Users\pchiocchio\AppData\Local\Temp\3c91563b-7bef-4116-8770-530a22aa1648\97451176-a954-4555-8422-
    remark: 25MM4HRC_10min Edited 2012
*
 *  CALIB NASHYD         0046  1  5.0   75.42    0.02  8.25   2.36 0.09   0.000
    [CN=76.0         ]
    [ N = 1.5:Tp 5.71]
*
    ADD [  0042+  0046]  0055  3  5.0  108.76    0.04  6.67   2.36  n/a   0.000
*
    ADD [  0055+  0085]  0055  1  5.0  319.04    0.27  2.75   6.95  n/a   0.000
*
    CHANNEL[ 2:  0055]   0087  1  5.0  319.04    0.26  3.00   6.94  n/a   0.000
*
    READ STORM                 10.0
    [ Ptot= 25.00 mm ]
    fname : C:\Users\pchiocchio\AppData\Local\Temp\3c91563b-7bef-4116-8770-530a22aa1648\97451176-a954-4555-8422-
    remark: 25MM4HRC_10min Edited 2012
*
 *  CALIB NASHYD         0006  1  5.0    2.42    0.00  4.33   2.25 0.09   0.000
    [CN=75.0         ]
    [ N = 1.5:Tp 1.50]
*
    READ STORM                 10.0
    [ Ptot= 25.00 mm ]
    fname : C:\Users\pchiocchio\AppData\Local\Temp\3c91563b-7bef-4116-8770-530a22aa1648\97451176-a954-4555-8422-
    remark: 25MM4HRC_10min Edited 2012
*
 *  CALIB STANDHYD       0113  1  5.0    0.62    0.04  1.50  16.02 0.64   0.000
```

```
    [I%=50.0:S%= 2.00]
*
    ADD [  0113+  0006]  0131  3  5.0    3.04    0.04  1.50   5.06  n/a   0.000
*
    CHANNEL[ 2:  0131]   0091  1  5.0    3.04    0.02  1.58   5.06  n/a   0.000
*
    READ STORM                 10.0
    [ Ptot= 25.00 mm ]
    fname : C:\Users\pchiocchio\AppData\Local\Temp\3c91563b-7bef-4116-8770-530a22aa1648\97451176-a954-4555-8422-
    remark: 25MM4HRC_10min Edited 2012
*
 *  CALIB NASHYD         0008  1  5.0    0.95    0.00  4.42   2.24 0.09   0.000
    [CN=75.0         ]
    [ N = 1.5:Tp 1.55]
*
    READ STORM                 10.0
    [ Ptot= 25.00 mm ]
    fname : C:\Users\pchiocchio\AppData\Local\Temp\3c91563b-7bef-4116-8770-530a22aa1648\97451176-a954-4555-8422-
    remark: 25MM4HRC_10min Edited 2012
*
 *  CALIB STANDHYD       0111  1  5.0    0.55    0.04  1.50  16.01 0.64   0.000
    [I%=50.0:S%= 2.00]
*
    READ STORM                 10.0
    [ Ptot= 25.00 mm ]
    fname : C:\Users\pchiocchio\AppData\Local\Temp\3c91563b-7bef-4116-8770-530a22aa1648\97451176-a954-4555-8422-
    remark: 25MM4HRC_10min Edited 2012
*
 *  CALIB STANDHYD       0133  1  5.0    1.76    0.15  1.50  18.26 0.73   0.000
    [I%=64.0:S%= 2.00]
*
    ADD [  0111+  0133]  0011  3  5.0    2.31    0.19  1.50  17.72  n/a   0.000
*
    ADD [  0011+  0008]  0011  1  5.0    3.26    0.19  1.50  13.23  n/a   0.000
*
    ADD [  0011+  0091]  0011  3  5.0    6.30    0.21  1.50   9.28  n/a   0.000
*
    CHANNEL[ 2:  0011]   0092  1  5.0    6.30    0.11  1.58   9.28  n/a   0.000
*
    READ STORM                 10.0
    [ Ptot= 25.00 mm ]
    fname : C:\Users\pchiocchio\AppData\Local\Temp\3c91563b-7bef-4116-8770-530a22aa1648\97451176-a954-4555-8422-
    remark: 25MM4HRC_10min Edited 2012
*
 *  CALIB NASHYD         0038  1  5.0    7.23    0.00  6.67   2.26 0.09   0.000
    [CN=75.0         ]
    [ N = 1.5:Tp 4.06]
*
    ADD [  0038+  0092]  0052  3  5.0   13.53    0.11  1.58   5.53  n/a   0.000
*
    READ STORM                 10.0
    [ Ptot= 25.00 mm ]
    fname : C:\Users\pchiocchio\AppData\Local\Temp\3c91563b-7bef-4116-8770-530a22aa1648\97451176-a954-4555-8422-
    remark: 25MM4HRC_10min Edited 2012
*
 *  CALIB NASHYD         0007  1  5.0    0.22    0.00  3.50   2.22 0.09   0.000
    [CN=75.0         ]
    [ N = 1.5:Tp 0.46]
*
    CHANNEL[ 2:  0007]   0089  1  5.0    0.22    0.00  4.08   2.19  n/a   0.000
*
    READ STORM                 10.0
    [ Ptot= 25.00 mm ]
    fname : C:\Users\pchiocchio\AppData\Local\Temp\3c91563b-7bef-4116-8770-530a22aa1648\97451176-a954-4555-8422-
    remark: 25MM4HRC_10min Edited 2012
*
 *  CALIB NASHYD         0009  1  5.0    2.18    0.00  5.50   2.25 0.09   0.000
    [CN=75.0         ]
    [ N = 1.5:Tp 2.82]
*
    READ STORM                 10.0
    [ Ptot= 25.00 mm ]
    fname : C:\Users\pchiocchio\AppData\Local\Temp\3c91563b-7bef-4116-8770-530a22aa1648\97451176-a954-4555-8422-
    remark: 25MM4HRC_10min Edited 2012
*
 *  CALIB STANDHYD       0114  1  5.0    0.46    0.03  1.50  16.01 0.64   0.000
    [I%=50.0:S%= 2.00]
*
    READ STORM                 10.0
    [ Ptot= 25.00 mm ]
    fname : C:\Users\pchiocchio\AppData\Local\Temp\3c91563b-7bef-4116-8770-530a22aa1648\97451176-a954-4555-8422-
    remark: 25MM4HRC_10min Edited 2012
*
 *  CALIB STANDHYD       0132  1  5.0    1.32    0.12  1.50  18.26 0.73   0.000
    [I%=64.0:S%= 2.00]
*
    ADD [  0114+  0132]  0010  3  5.0    1.79    0.15  1.50  17.67  n/a   0.000
*
    ADD [  0010+  0089]  0010  1  5.0    2.01    0.15  1.50  15.97  n/a   0.000
*
    ADD [  0010+  0009]  0010  3  5.0    4.18    0.15  1.50   8.82  n/a   0.000
*
    READ STORM                 10.0
    [ Ptot= 25.00 mm ]
    fname : C:\Users\pchiocchio\AppData\Local\Temp\3c91563b-7bef-4116-8770-530a22aa1648\97451176-a954-4555-8422-
```

```
    remark: 25MM4HRC_10min Edited 2012
*
 *  CALIB NASHYD         0100  1  5.0   14.67    0.01  4.25   1.67 0.07   0.000
    [CN=68.0         ]
    [ N = 1.5:Tp 1.29]
*
    READ STORM                 10.0
    [ Ptot= 25.00 mm ]
    fname : C:\Users\pchiocchio\AppData\Local\Temp\3c91563b-7bef-4116-8770-530a22aa1648\97451176-a954-4555-8422-
    remark: 25MM4HRC_10min Edited 2012
*
 *  CALIB NASHYD         0102  1  5.0    0.88    0.00  4.00   1.66 0.07   0.000
    [CN=68.0         ]
    [ N = 1.5:Tp 0.62]
*
    ADD [  0100+  0102]  0137  3  5.0   15.55    0.01  4.17   1.67  n/a   0.000
*
    ADD [  0010+  0137]  0130  3  5.0   19.73    0.15  1.50   3.19  n/a   0.000
*
    CHANNEL[ 2:  0130]   0094  1  5.0   19.73    0.04  1.83   3.19  n/a   0.000
*
    READ STORM                 10.0
    [ Ptot= 25.00 mm ]
    fname : C:\Users\pchiocchio\AppData\Local\Temp\3c91563b-7bef-4116-8770-530a22aa1648\97451176-a954-4555-8422-
    remark: 25MM4HRC_10min Edited 2012
*
 *  CALIB NASHYD         0037  1  5.0    9.00    0.00  7.67   2.25 0.09   0.000
    [CN=75.0         ]
    [ N = 1.5:Tp 5.09]
*
    ADD [  0037+  0094]  0053  3  5.0   28.73    0.04  1.92   2.89  n/a   0.000
*
    READ STORM                 10.0
    [ Ptot= 25.00 mm ]
    fname : C:\Users\pchiocchio\AppData\Local\Temp\3c91563b-7bef-4116-8770-530a22aa1648\97451176-a954-4555-8422-
    remark: 25MM4HRC_10min Edited 2012
*
 *  CALIB NASHYD         0013  1  5.0    1.42    0.00  4.08   2.25 0.09   0.000
    [CN=75.0         ]
    [ N = 1.5:Tp 1.01]
*
    READ STORM                 10.0
    [ Ptot= 25.00 mm ]
    fname : C:\Users\pchiocchio\AppData\Local\Temp\3c91563b-7bef-4116-8770-530a22aa1648\97451176-a954-4555-8422-
    remark: 25MM4HRC_10min Edited 2012
*
 *  CALIB NASHYD         0014  1  5.0    0.93    0.00  4.17   2.24 0.09   0.000
    [CN=75.0         ]
    [ N = 1.5:Tp 1.18]
*
    READ STORM                 10.0
    [ Ptot= 25.00 mm ]
    fname : C:\Users\pchiocchio\AppData\Local\Temp\3c91563b-7bef-4116-8770-530a22aa1648\97451176-a954-4555-8422-
    remark: 25MM4HRC_10min Edited 2012
*
 *  CALIB STANDHYD       0109  1  5.0   50.15    3.09  1.58  18.90 0.76   0.000
    [I%=68.0:S%= 2.00]
*
 ** Reservoir
    OUTFLOW:             0110  1  5.0   50.15    0.03  4.67  15.71  n/a   0.000
*
    READ STORM                 10.0
    [ Ptot= 25.00 mm ]
    fname : C:\Users\pchiocchio\AppData\Local\Temp\3c91563b-7bef-4116-8770-530a22aa1648\97451176-a954-4555-8422-
    remark: 25MM4HRC_10min Edited 2012
*
 *  CALIB STANDHYD       0115  1  5.0    0.23    0.02  1.50  15.99 0.64   0.000
    [I%=50.0:S%= 2.00]
*
    READ STORM                 10.0
    [ Ptot= 25.00 mm ]
    fname : C:\Users\pchiocchio\AppData\Local\Temp\3c91563b-7bef-4116-8770-530a22aa1648\97451176-a954-4555-8422-
    remark: 25MM4HRC_10min Edited 2012
*
 *  CALIB STANDHYD       0116  1  5.0    0.29    0.02  1.50  16.00 0.64   0.000
    [I%=50.0:S%= 2.00]
*
    READ STORM                 10.0
    [ Ptot= 25.00 mm ]
    fname : C:\Users\pchiocchio\AppData\Local\Temp\3c91563b-7bef-4116-8770-530a22aa1648\97451176-a954-4555-8422-
    remark: 25MM4HRC_10min Edited 2012
*
 *  CALIB STANDHYD       0134  1  5.0    0.54    0.05  1.50  18.24 0.73   0.000
    [I%=64.0:S%= 2.00]
*
    READ STORM                 10.0
    [ Ptot= 25.00 mm ]
    fname : C:\Users\pchiocchio\AppData\Local\Temp\3c91563b-7bef-4116-8770-530a22aa1648\97451176-a954-4555-8422-
    remark: 25MM4HRC_10min Edited 2012
*
 *  CALIB STANDHYD       0135  1  5.0    0.26    0.02  1.50  18.22 0.73   0.000
    [I%=64.0:S%= 2.00]
*
    ADD [  0110+  0115]  0012  3  5.0   50.38    0.03  4.00  15.71  n/a   0.000
*
```

```
    ADD [  0012+  0116]  0012  1  5.0   50.67    0.04  1.50  15.71  n/a   0.000
*
    ADD [  0012+  0013]  0012  3  5.0   52.09    0.04  1.50  15.34  n/a   0.000
*
    ADD [  0012+  0134]  0012  1  5.0   52.63    0.09  1.50  15.37  n/a   0.000
*
    ADD [  0012+  0135]  0012  3  5.0   52.89    0.12  1.50  15.39  n/a   0.000
*
    ADD [  0012+  0014]  0012  1  5.0   53.82    0.12  1.50  15.16  n/a   0.000
*
    CHANNEL[ 2:  0012]   0093  1  5.0   53.82    0.05  1.58  15.14  n/a   0.000
*
    READ STORM                 10.0
    [ Ptot= 25.00 mm ]
    fname : C:\Users\pchiocchio\AppData\Local\Temp\3c91563b-7bef-4116-8770-530a22aa1648\97451176-a954-4555-8422-
    remark: 25MM4HRC_10min Edited 2012
*
 *  CALIB NASHYD         0039  1  5.0   13.25    0.00  6.67   2.26 0.09   0.000
    [CN=75.0         ]
    [ N = 1.5:Tp 4.05]
*
    ADD [  0039+  0093]  0051  3  5.0   67.07    0.05  1.58  12.60  n/a   0.000
*
    READ STORM                 10.0
    [ Ptot= 25.00 mm ]
    fname : C:\Users\pchiocchio\AppData\Local\Temp\3c91563b-7bef-4116-8770-530a22aa1648\97451176-a954-4555-8422-
    remark: 25MM4HRC_10min Edited 2012
*
 *  CALIB NASHYD         0040  1  5.0    7.26    0.00  6.25   2.26 0.09   0.000
    [CN=75.0         ]
    [ N = 1.5:Tp 3.69]
*
    READ STORM                 10.0
    [ Ptot= 25.00 mm ]
    fname : C:\Users\pchiocchio\AppData\Local\Temp\3c91563b-7bef-4116-8770-530a22aa1648\97451176-a954-4555-8422-
    remark: 25MM4HRC_10min Edited 2012
*
 *  CALIB NASHYD         0136  1  5.0    4.10    0.01  4.00   1.66 0.07   0.000
    [CN=68.0         ]
    [ N = 1.5:Tp 0.62]
*
    CHANNEL[ 2:  0136]   0101  1  5.0    4.10    0.01  4.08   1.66  n/a   0.000
*
    ADD [  0101+  0040]  0090  3  5.0   11.36    0.01  4.25   2.04  n/a   0.000
*
    ADD [  0090+  0051]  0090  1  5.0   78.43    0.05  4.00  11.07  n/a   0.000
*
    ADD [  0090+  0052]  0090  3  5.0   91.96    0.16  1.58  10.25  n/a   0.000
*
    ADD [  0090+  0053]  0090  1  5.0  120.69    0.19  1.58   8.50  n/a   0.000
*
    CHANNEL[ 2:  0090]   0095  1  5.0  120.69    0.16  1.92   8.50  n/a   0.000
*
    READ STORM                 10.0
    [ Ptot= 25.00 mm ]
    fname : C:\Users\pchiocchio\AppData\Local\Temp\3c91563b-7bef-4116-8770-530a22aa1648\97451176-a954-4555-8422-
    remark: 25MM4HRC_10min Edited 2012
*
 *  CALIB NASHYD         0041  1  5.0   12.70    0.01  5.83   2.26 0.09   0.000
    [CN=75.0         ]
    [ N = 1.5:Tp 3.25]
*
    ADD [  0041+  0095]  0050  3  5.0  133.39    0.16  1.92   7.90  n/a   0.000
*
    READ STORM                 10.0
    [ Ptot= 25.00 mm ]
    fname : C:\Users\pchiocchio\AppData\Local\Temp\3c91563b-7bef-4116-8770-530a22aa1648\97451176-a954-4555-8422-
    remark: 25MM4HRC_10min Edited 2012
*
 *  CALIB NASHYD         0047  1  5.0   71.95    0.02  7.67   2.36 0.09   0.000
    [CN=76.0         ]
    [ N = 1.5:Tp 5.10]
*
    ADD [  0047+  0050]  0054  3  5.0  205.34    0.16  1.92   5.96  n/a   0.000
*
    ADD [  0054+  0087]  0054  1  5.0  524.38    0.39  2.92   6.56  n/a   0.000
*
    CHANNEL[ 2:  0054]   0088  1  5.0  524.38    0.38  3.25   6.56  n/a   0.000
*
    READ STORM                 10.0
    [ Ptot= 25.00 mm ]
    fname : C:\Users\pchiocchio\AppData\Local\Temp\3c91563b-7bef-4116-8770-530a22aa1648\97451176-a954-4555-8422-
    remark: 25MM4HRC_10min Edited 2012
*
 *  CALIB NASHYD         0048  1  5.0   34.24    0.02  4.58   1.97 0.08   0.000
    [CN=72.0         ]
    [ N = 1.5:Tp 1.82]
*
    ADD [  0048+  0088]  0049  3  5.0  558.62    0.40  3.25   6.28  n/a   0.000
*
    READ STORM                 10.0
    [ Ptot= 25.00 mm ]
    fname : C:\Users\pchiocchio\AppData\Local\Temp\3c91563b-7bef-4116-8770-530a22aa1648\97451176-a954-4555-8422-
    remark: 25MM4HRC_10min Edited 2012
*
```

```
 *  CALIB STANDHYD       0118  1  5.0   13.25    1.34  1.50  21.77 0.87   0.000
    [I%=86.0:S%= 2.00]
*
    READ STORM                 10.0
    [ Ptot= 25.00 mm ]
    fname : C:\Users\pchiocchio\AppData\Local\Temp\3c91563b-7bef-4116-8770-530a22aa1648\97451176-a954-4555-8422-
    remark: 25MM4HRC_10min Edited 2012
*
 *  CALIB STANDHYD       0123  1  5.0    8.30    0.91  1.50  22.24 0.89   0.000
    [I%=89.0:S%= 2.00]
*
    READ STORM                 10.0
    [ Ptot= 25.00 mm ]
    fname : C:\Users\pchiocchio\AppData\Local\Temp\3c91563b-7bef-4116-8770-530a22aa1648\97451176-a954-4555-8422-
    remark: 25MM4HRC_10min Edited 2012
*
 *  CALIB STANDHYD       0125  1  5.0   13.70    1.42  1.50  22.24 0.89   0.000
    [I%=89.0:S%= 2.00]
*
 FINISH

==============================================================================================================
```

```
==========================================================================================

       V    V   I    SSSSS  U   U    A    L              (v 6.2.2001)
       V    V   I    SS     U   U   A A   L
        V  V    I     SS    U   U  AAAAA  L
        V  V    I      SS   U   U  A   A  L
         VV     I    SSSSS  UUUUU  A   A  LLLLL

        OOO   TTTTT  TTTTT  H   H  Y   Y  M   M   OOO    TM
       O   O    T      T    H   H   Y Y   MM MM  O   O
       O   O    T      T    H   H    Y    M   M  O   O
        OOO     T      T    H   H    Y    M   M   OOO
Developed and Distributed by Smart City Water Inc
Copyright 2007 - 2020 Smart City Water Inc
All rights reserved.


                  *****  S U M M A R Y   O U T P U T  *****


  Input   filename: C:\Program Files (x86)\Visual OTTHYMO 6.2\VO2\voin.dat
  Output  filename: C:\Users\pchiocchio\AppData\Local\Civica\VH5\d59fad6f-510d-48b8-a35a-1bee91f156cc\40351191-4022-4a2f-a32d-
cf1563a51ede\s
  Summary filename: C:\Users\pchiocchio\AppData\Local\Civica\VH5\d59fad6f-510d-48b8-a35a-1bee91f156cc\40351191-4022-4a2f-a32d-
cf1563a51ede\s


DATE: 02/02/2021                          TIME: 05:18:32

USER:


COMMENTS: ____________________________________________________________


  ************************************************
  ** SIMULATION : 2 - Year (6hr AES)            **
  ************************************************

  W/E COMMAND             HYD ID   DT    AREA  ' Qpeak Tpeak   R.V. R.C.   Qbase
                                   min     ha   '  cms   hrs     mm          cms

      START @  0.00 hrs
      --------------------
    READ STORM                 15.0
    [ Ptot= 36.00 mm ]
    fname : C:\Users\pchiocchio\AppData\Local\Temp\3c91563b-7bef-4116-8770-530a22aa1648\7f7866ec-ed8a-491d-87e1-
    remark: 2 Year 6 Hour AES (Bloor, TRCA)
*
 ** CALIB NASHYD         0004  1  5.0   40.84    0.03  8.42   6.10 0.17   0.000
    [CN=75.0         ]
    [ N = 1.5:Tp 5.06]
*
    CHANNEL[ 2:  0004]   0066  1  5.0   40.84    0.03 10.17   6.11  n/a   0.000
*
    READ STORM                 15.0
    [ Ptot= 36.00 mm ]
    fname : C:\Users\pchiocchio\AppData\Local\Temp\3c91563b-7bef-4116-8770-530a22aa1648\7f7866ec-ed8a-491d-87e1-
    remark: 2 Year 6 Hour AES (Bloor, TRCA)
*
 ** CALIB NASHYD         0005  1  5.0   34.73    0.01 14.00   5.75 0.16   0.000
    [CN=75.0         ]
    [ N = 1.5:Tp10.71]
*
    ADD [  0005+  0066]  0003  3  5.0   75.57    0.04 10.67   6.10  n/a   0.000
*
    PIPE   [ 2:  0003]   0120  1  5.0   75.57    0.04 11.00   6.10  n/a   0.000
*
    CHANNEL[ 2:  0120]   0080  1  5.0   75.57    0.04 11.67   6.10  n/a   0.000
*
    READ STORM                 15.0
    [ Ptot= 36.00 mm ]
    fname : C:\Users\pchiocchio\AppData\Local\Temp\3c91563b-7bef-4116-8770-530a22aa1648\7f7866ec-ed8a-491d-87e1-
    remark: 2 Year 6 Hour AES (Bloor, TRCA)
*
 ** CALIB STANDHYD       0104  1  5.0   83.92    5.68  2.75  30.60 0.85   0.000
    [I%=78.0:S%= 2.00]
*
 ** Reservoir
    OUTFLOW:             0105  1  5.0   83.92    0.38  4.83  27.20  n/a   0.000
*
    DUHYD                0128  1  5.0   83.92    0.38  4.83  27.20  n/a   0.000
       MAJOR SYSTEM:     0128  2  5.0    0.00    0.00  0.00   0.00  n/a   0.000
       MINOR SYSTEM:     0128  3  5.0   83.92    0.38  4.83  27.20  n/a   0.000
*
    READ STORM                 15.0
    [ Ptot= 36.00 mm ]
    fname : C:\Users\pchiocchio\AppData\Local\Temp\3c91563b-7bef-4116-8770-530a22aa1648\7f7866ec-ed8a-491d-87e1-
    remark: 2 Year 6 Hour AES (Bloor, TRCA)
*
 *  CALIB STANDHYD       0127  1  5.0    3.04    0.15  2.75  21.80 0.61   0.000
    [I%=34.0:S%= 2.00]
*
    ADD [  0127+  0128]  0122  3  5.0    3.04    0.15  2.75  21.80  n/a   0.000
```

```
*
    ADD [  0122+  0080]  0122  1  5.0   78.61    0.15  2.75   6.71  n/a   0.000
*
    CHANNEL[ 2:  0122]   0081  1  5.0   78.61    0.13  2.83   6.71  n/a   0.000
*
    READ STORM                 15.0
    [ Ptot= 36.00 mm ]
    fname : C:\Users\pchiocchio\AppData\Local\Temp\3c91563b-7bef-4116-8770-530a22aa1648\7f7866ec-ed8a-491d-87e1-
    remark: 2 Year 6 Hour AES (Bloor, TRCA)
*
 *  CALIB STANDHYD       0117  1  5.0    7.94    0.70  2.75  33.60 0.93   0.000
    [I%=93.0:S%= 2.00]
*
    ADD [  0117+  0128]  0035  3  5.0   91.86    0.73  2.75  27.75  n/a   0.000
*
    ADD [  0035+  0081]  0035  1  5.0  170.47    0.85  2.75  18.05  n/a   0.000
*
    CHANNEL[ 2:  0035]   0082  1  5.0  170.47    0.57  2.83  18.03  n/a   0.000
*
    READ STORM                 15.0
    [ Ptot= 36.00 mm ]
    fname : C:\Users\pchiocchio\AppData\Local\Temp\3c91563b-7bef-4116-8770-530a22aa1648\7f7866ec-ed8a-491d-87e1-
    remark: 2 Year 6 Hour AES (Bloor, TRCA)
*
 *  CALIB NASHYD         0044  1  5.0   24.38    0.01 14.00   5.75 0.16   0.000
    [CN=75.0         ]
    [ N = 1.5:Tp10.73]
*
    ADD [  0044+  0082]  0056  3  5.0  194.85    0.57  2.83  16.54  n/a   0.000
*
    CHANNEL[ 2:  0056]   0083  1  5.0  194.85    0.46  3.25  16.53  n/a   0.000
*
    READ STORM                 15.0
    [ Ptot= 36.00 mm ]
    fname : C:\Users\pchiocchio\AppData\Local\Temp\3c91563b-7bef-4116-8770-530a22aa1648\7f7866ec-ed8a-491d-87e1-
    remark: 2 Year 6 Hour AES (Bloor, TRCA)
*
 *  CALIB NASHYD         0043  1  5.0   10.09    0.02  5.75   6.36 0.18   0.000
    [CN=76.0         ]
    [ N = 1.5:Tp 2.02]
*
    READ STORM                 15.0
    [ Ptot= 36.00 mm ]
    fname : C:\Users\pchiocchio\AppData\Local\Temp\3c91563b-7bef-4116-8770-530a22aa1648\7f7866ec-ed8a-491d-87e1-
    remark: 2 Year 6 Hour AES (Bloor, TRCA)
*
 *  CALIB NASHYD         0045  1  5.0    5.34    0.01  4.92   6.36 0.18   0.000
    [CN=76.0         ]
    [ N = 1.5:Tp 1.39]
*
    ADD [  0043+  0045]  0086  3  5.0   15.43    0.03  5.25   6.36  n/a   0.000
*
    ADD [  0086+  0083]  0086  1  5.0  210.28    0.48  3.25  15.78  n/a   0.000
*
    CHANNEL[ 2:  0086]   0085  1  5.0  210.28    0.47  5.17  15.77  n/a   0.000
*
    READ STORM                 15.0
    [ Ptot= 36.00 mm ]
    fname : C:\Users\pchiocchio\AppData\Local\Temp\3c91563b-7bef-4116-8770-530a22aa1648\7f7866ec-ed8a-491d-87e1-
    remark: 2 Year 6 Hour AES (Bloor, TRCA)
*
 *  CALIB NASHYD         0042  1  5.0   33.34    0.05  6.58   6.36 0.18   0.000
    [CN=76.0         ]
    [ N = 1.5:Tp 3.02]
*
    READ STORM                 15.0
    [ Ptot= 36.00 mm ]
    fname : C:\Users\pchiocchio\AppData\Local\Temp\3c91563b-7bef-4116-8770-530a22aa1648\7f7866ec-ed8a-491d-87e1-
    remark: 2 Year 6 Hour AES (Bloor, TRCA)
*
 *  CALIB NASHYD         0046  1  5.0   75.42    0.06  9.08   6.35 0.18   0.000
    [CN=76.0         ]
    [ N = 1.5:Tp 5.71]
*
    ADD [  0042+  0046]  0055  3  5.0  108.76    0.10  7.50   6.36  n/a   0.000
*
    ADD [  0055+  0085]  0055  1  5.0  319.04    0.55  5.42  12.56  n/a   0.000
*
    CHANNEL[ 2:  0055]   0087  1  5.0  319.04    0.55  5.67  12.56  n/a   0.000
*
    READ STORM                 15.0
    [ Ptot= 36.00 mm ]
    fname : C:\Users\pchiocchio\AppData\Local\Temp\3c91563b-7bef-4116-8770-530a22aa1648\7f7866ec-ed8a-491d-87e1-
    remark: 2 Year 6 Hour AES (Bloor, TRCA)
*
 *  CALIB NASHYD         0006  1  5.0    2.42    0.01  5.00   6.10 0.17   0.000
    [CN=75.0         ]
    [ N = 1.5:Tp 1.50]
*
    READ STORM                 15.0
    [ Ptot= 36.00 mm ]
    fname : C:\Users\pchiocchio\AppData\Local\Temp\3c91563b-7bef-4116-8770-530a22aa1648\7f7866ec-ed8a-491d-87e1-
    remark: 2 Year 6 Hour AES (Bloor, TRCA)
*
 *  CALIB STANDHYD       0113  1  5.0    0.62    0.04  2.75  24.98 0.69   0.000
```

```
    [I%=50.0:S%= 2.00]
*
    ADD [  0113+  0006]  0131  3  5.0    3.04    0.04  2.75   9.95  n/a   0.000
*
    CHANNEL[ 2:  0131]   0091  1  5.0    3.04    0.03  2.83   9.95  n/a   0.000
*
    READ STORM                 15.0
    [ Ptot= 36.00 mm ]
    fname : C:\Users\pchiocchio\AppData\Local\Temp\3c91563b-7bef-4116-8770-530a22aa1648\7f7866ec-ed8a-491d-87e1-
    remark: 2 Year 6 Hour AES (Bloor, TRCA)
*
 *  CALIB NASHYD         0008  1  5.0    0.95    0.00  5.08   6.09 0.17   0.000
    [CN=75.0         ]
    [ N = 1.5:Tp 1.55]
*
    READ STORM                 15.0
    [ Ptot= 36.00 mm ]
    fname : C:\Users\pchiocchio\AppData\Local\Temp\3c91563b-7bef-4116-8770-530a22aa1648\7f7866ec-ed8a-491d-87e1-
    remark: 2 Year 6 Hour AES (Bloor, TRCA)
*
 *  CALIB STANDHYD       0111  1  5.0    0.55    0.03  2.75  24.98 0.69   0.000
    [I%=50.0:S%= 2.00]
*
    READ STORM                 15.0
    [ Ptot= 36.00 mm ]
    fname : C:\Users\pchiocchio\AppData\Local\Temp\3c91563b-7bef-4116-8770-530a22aa1648\7f7866ec-ed8a-491d-87e1-
    remark: 2 Year 6 Hour AES (Bloor, TRCA)
*
 *  CALIB STANDHYD       0133  1  5.0    1.76    0.12  2.75  27.79 0.77   0.000
    [I%=64.0:S%= 2.00]
*
    ADD [  0111+  0133]  0011  3  5.0    2.31    0.15  2.75  27.12  n/a   0.000
*
    ADD [  0011+  0008]  0011  1  5.0    3.26    0.16  2.75  21.02  n/a   0.000
*
    ADD [  0011+  0091]  0011  3  5.0    6.30    0.18  2.75  15.68  n/a   0.000
*
    CHANNEL[ 2:  0011]   0092  1  5.0    6.30    0.15  2.75  15.68  n/a   0.000
*
    READ STORM                 15.0
    [ Ptot= 36.00 mm ]
    fname : C:\Users\pchiocchio\AppData\Local\Temp\3c91563b-7bef-4116-8770-530a22aa1648\7f7866ec-ed8a-491d-87e1-
    remark: 2 Year 6 Hour AES (Bloor, TRCA)
*
 *  CALIB NASHYD         0038  1  5.0    7.23    0.01  7.50   6.11 0.17   0.000
    [CN=75.0         ]
    [ N = 1.5:Tp 4.06]
*
    ADD [  0038+  0092]  0052  3  5.0   13.53    0.15  2.75  10.56  n/a   0.000
*
    READ STORM                 15.0
    [ Ptot= 36.00 mm ]
    fname : C:\Users\pchiocchio\AppData\Local\Temp\3c91563b-7bef-4116-8770-530a22aa1648\7f7866ec-ed8a-491d-87e1-
    remark: 2 Year 6 Hour AES (Bloor, TRCA)
*
 *  CALIB NASHYD         0007  1  5.0    0.22    0.00  3.75   6.05 0.17   0.000
    [CN=75.0         ]
    [ N = 1.5:Tp 0.46]
*
    CHANNEL[ 2:  0007]   0089  1  5.0    0.22    0.00  4.42   6.02  n/a   0.000
*
    READ STORM                 15.0
    [ Ptot= 36.00 mm ]
    fname : C:\Users\pchiocchio\AppData\Local\Temp\3c91563b-7bef-4116-8770-530a22aa1648\7f7866ec-ed8a-491d-87e1-
    remark: 2 Year 6 Hour AES (Bloor, TRCA)
*
 *  CALIB NASHYD         0009  1  5.0    2.18    0.00  6.50   6.10 0.17   0.000
    [CN=75.0         ]
    [ N = 1.5:Tp 2.82]
*
    READ STORM                 15.0
    [ Ptot= 36.00 mm ]
    fname : C:\Users\pchiocchio\AppData\Local\Temp\3c91563b-7bef-4116-8770-530a22aa1648\7f7866ec-ed8a-491d-87e1-
    remark: 2 Year 6 Hour AES (Bloor, TRCA)
*
 *  CALIB STANDHYD       0114  1  5.0    0.46    0.03  2.75  24.98 0.69   0.000
    [I%=50.0:S%= 2.00]
*
    READ STORM                 15.0
    [ Ptot= 36.00 mm ]
    fname : C:\Users\pchiocchio\AppData\Local\Temp\3c91563b-7bef-4116-8770-530a22aa1648\7f7866ec-ed8a-491d-87e1-
    remark: 2 Year 6 Hour AES (Bloor, TRCA)
*
 *  CALIB STANDHYD       0132  1  5.0    1.32    0.09  2.75  27.79 0.77   0.000
    [I%=64.0:S%= 2.00]
*
    ADD [  0114+  0132]  0010  3  5.0    1.79    0.12  2.75  27.06  n/a   0.000
*
    ADD [  0010+  0089]  0010  1  5.0    2.01    0.12  2.75  24.75  n/a   0.000
*
    ADD [  0010+  0009]  0010  3  5.0    4.18    0.12  2.75  15.03  n/a   0.000
*
    READ STORM                 15.0
    [ Ptot= 36.00 mm ]
    fname : C:\Users\pchiocchio\AppData\Local\Temp\3c91563b-7bef-4116-8770-530a22aa1648\7f7866ec-ed8a-491d-87e1-
```

```
    remark: 2 Year 6 Hour AES (Bloor, TRCA)
*
 *  CALIB NASHYD         0100  1  5.0   14.67    0.03  4.83   4.64 0.13   0.000
    [CN=68.0         ]
    [ N = 1.5:Tp 1.29]
*
    READ STORM                 15.0
    [ Ptot= 36.00 mm ]
    fname : C:\Users\pchiocchio\AppData\Local\Temp\3c91563b-7bef-4116-8770-530a22aa1648\7f7866ec-ed8a-491d-87e1-
    remark: 2 Year 6 Hour AES (Bloor, TRCA)
*
 *  CALIB NASHYD         0102  1  5.0    0.88    0.00  3.92   4.62 0.13   0.000
    [CN=68.0         ]
    [ N = 1.5:Tp 0.62]
*
    ADD [  0100+  0102]  0137  3  5.0   15.55    0.03  4.75   4.64  n/a   0.000
*
    ADD [  0010+  0137]  0130  3  5.0   19.73    0.13  2.75   6.84  n/a   0.000
*
    CHANNEL[ 2:  0130]   0094  1  5.0   19.73    0.06  3.25   6.84  n/a   0.000
*
    READ STORM                 15.0
    [ Ptot= 36.00 mm ]
    fname : C:\Users\pchiocchio\AppData\Local\Temp\3c91563b-7bef-4116-8770-530a22aa1648\7f7866ec-ed8a-491d-87e1-
    remark: 2 Year 6 Hour AES (Bloor, TRCA)
*
 *  CALIB NASHYD         0037  1  5.0    9.00    0.01  8.50   6.10 0.17   0.000
    [CN=75.0         ]
    [ N = 1.5:Tp 5.09]
*
    ADD [  0037+  0094]  0053  3  5.0   28.73    0.07  3.33   6.61  n/a   0.000
*
    READ STORM                 15.0
    [ Ptot= 36.00 mm ]
    fname : C:\Users\pchiocchio\AppData\Local\Temp\3c91563b-7bef-4116-8770-530a22aa1648\7f7866ec-ed8a-491d-87e1-
    remark: 2 Year 6 Hour AES (Bloor, TRCA)
*
 *  CALIB NASHYD         0013  1  5.0    1.42    0.00  4.50   6.09 0.17   0.000
    [CN=75.0         ]
    [ N = 1.5:Tp 1.01]
*
    READ STORM                 15.0
    [ Ptot= 36.00 mm ]
    fname : C:\Users\pchiocchio\AppData\Local\Temp\3c91563b-7bef-4116-8770-530a22aa1648\7f7866ec-ed8a-491d-87e1-
    remark: 2 Year 6 Hour AES (Bloor, TRCA)
*
 *  CALIB NASHYD         0014  1  5.0    0.93    0.00  4.75   6.09 0.17   0.000
    [CN=75.0         ]
    [ N = 1.5:Tp 1.18]
*
    READ STORM                 15.0
    [ Ptot= 36.00 mm ]
    fname : C:\Users\pchiocchio\AppData\Local\Temp\3c91563b-7bef-4116-8770-530a22aa1648\7f7866ec-ed8a-491d-87e1-
    remark: 2 Year 6 Hour AES (Bloor, TRCA)
*
 *  CALIB STANDHYD       0109  1  5.0   50.15    3.24  2.75  28.60 0.79   0.000
    [I%=68.0:S%= 2.00]
*
 ** Reservoir
    OUTFLOW:             0110  1  5.0   50.15    0.22  4.83  24.79  n/a   0.000
*
    READ STORM                 15.0
    [ Ptot= 36.00 mm ]
    fname : C:\Users\pchiocchio\AppData\Local\Temp\3c91563b-7bef-4116-8770-530a22aa1648\7f7866ec-ed8a-491d-87e1-
    remark: 2 Year 6 Hour AES (Bloor, TRCA)
*
 *  CALIB STANDHYD       0115  1  5.0    0.23    0.01  2.75  24.96 0.69   0.000
    [I%=50.0:S%= 2.00]
*
    READ STORM                 15.0
    [ Ptot= 36.00 mm ]
    fname : C:\Users\pchiocchio\AppData\Local\Temp\3c91563b-7bef-4116-8770-530a22aa1648\7f7866ec-ed8a-491d-87e1-
    remark: 2 Year 6 Hour AES (Bloor, TRCA)
*
 *  CALIB STANDHYD       0116  1  5.0    0.29    0.02  2.75  24.97 0.69   0.000
    [I%=50.0:S%= 2.00]
*
    READ STORM                 15.0
    [ Ptot= 36.00 mm ]
    fname : C:\Users\pchiocchio\AppData\Local\Temp\3c91563b-7bef-4116-8770-530a22aa1648\7f7866ec-ed8a-491d-87e1-
    remark: 2 Year 6 Hour AES (Bloor, TRCA)
*
 *  CALIB STANDHYD       0134  1  5.0    0.54    0.04  2.75  27.78 0.77   0.000
    [I%=64.0:S%= 2.00]
*
    READ STORM                 15.0
    [ Ptot= 36.00 mm ]
    fname : C:\Users\pchiocchio\AppData\Local\Temp\3c91563b-7bef-4116-8770-530a22aa1648\7f7866ec-ed8a-491d-87e1-
    remark: 2 Year 6 Hour AES (Bloor, TRCA)
*
 *  CALIB STANDHYD       0135  1  5.0    0.26    0.02  2.75  27.76 0.77   0.000
    [I%=64.0:S%= 2.00]
*
    ADD [  0110+  0115]  0012  3  5.0   50.38    0.22  4.75  24.79  n/a   0.000
*
```

```
    ADD [  0012+  0116]  0012  1  5.0   50.67    0.22  4.75  24.79  n/a   0.000
*
    ADD [  0012+  0013]  0012  3  5.0   52.09    0.23  4.75  24.29  n/a   0.000
*
    ADD [  0012+  0134]  0012  1  5.0   52.63    0.23  4.75  24.32  n/a   0.000
*
    ADD [  0012+  0135]  0012  3  5.0   52.89    0.23  4.75  24.34  n/a   0.000
*
    ADD [  0012+  0014]  0012  1  5.0   53.82    0.23  4.75  24.02  n/a   0.000
*
    CHANNEL[ 2:  0012]   0093  1  5.0   53.82    0.23  4.83  24.00  n/a   0.000
*
    READ STORM                 15.0
    [ Ptot= 36.00 mm ]
    fname : C:\Users\pchiocchio\AppData\Local\Temp\3c91563b-7bef-4116-8770-530a22aa1648\7f7866ec-ed8a-491d-87e1-
    remark: 2 Year 6 Hour AES (Bloor, TRCA)
*
 *  CALIB NASHYD         0039  1  5.0   13.25    0.01  7.50   6.11 0.17   0.000
    [CN=75.0         ]
    [ N = 1.5:Tp 4.05]
*
    ADD [  0039+  0093]  0051  3  5.0   67.07    0.24  4.92  20.47  n/a   0.000
*
    READ STORM                 15.0
    [ Ptot= 36.00 mm ]
    fname : C:\Users\pchiocchio\AppData\Local\Temp\3c91563b-7bef-4116-8770-530a22aa1648\7f7866ec-ed8a-491d-87e1-
    remark: 2 Year 6 Hour AES (Bloor, TRCA)
*
 *  CALIB NASHYD         0040  1  5.0    7.26    0.01  7.17   6.11 0.17   0.000
    [CN=75.0         ]
    [ N = 1.5:Tp 3.69]
*
    READ STORM                 15.0
    [ Ptot= 36.00 mm ]
    fname : C:\Users\pchiocchio\AppData\Local\Temp\3c91563b-7bef-4116-8770-530a22aa1648\7f7866ec-ed8a-491d-87e1-
    remark: 2 Year 6 Hour AES (Bloor, TRCA)
*
 *  CALIB NASHYD         0136  1  5.0    4.10    0.01  3.92   4.63 0.13   0.000
    [CN=68.0         ]
    [ N = 1.5:Tp 0.62]
*
    CHANNEL[ 2:  0136]   0101  1  5.0    4.10    0.01  4.42   4.62  n/a   0.000
*
    ADD [  0101+  0040]  0090  3  5.0   11.36    0.02  4.58   5.57  n/a   0.000
*
    ADD [  0090+  0051]  0090  1  5.0   78.43    0.26  4.83  18.31  n/a   0.000
*
    ADD [  0090+  0052]  0090  3  5.0   91.96    0.29  4.75  17.17  n/a   0.000
*
    ADD [  0090+  0053]  0090  1  5.0  120.69    0.35  4.58  14.66  n/a   0.000
*
    CHANNEL[ 2:  0090]   0095  1  5.0  120.69    0.35  4.75  14.65  n/a   0.000
*
    READ STORM                 15.0
    [ Ptot= 36.00 mm ]
    fname : C:\Users\pchiocchio\AppData\Local\Temp\3c91563b-7bef-4116-8770-530a22aa1648\7f7866ec-ed8a-491d-87e1-
    remark: 2 Year 6 Hour AES (Bloor, TRCA)
*
 *  CALIB NASHYD         0041  1  5.0   12.70    0.02  6.83   6.11 0.17   0.000
    [CN=75.0         ]
    [ N = 1.5:Tp 3.25]
*
    ADD [  0041+  0095]  0050  3  5.0  133.39    0.36  4.75  13.84  n/a   0.000
*
    READ STORM                 15.0
    [ Ptot= 36.00 mm ]
    fname : C:\Users\pchiocchio\AppData\Local\Temp\3c91563b-7bef-4116-8770-530a22aa1648\7f7866ec-ed8a-491d-87e1-
    remark: 2 Year 6 Hour AES (Bloor, TRCA)
*
 *  CALIB NASHYD         0047  1  5.0   71.95    0.06  8.50   6.36 0.18   0.000
    [CN=76.0         ]
    [ N = 1.5:Tp 5.10]
*
    ADD [  0047+  0050]  0054  3  5.0  205.34    0.41  4.83  11.22  n/a   0.000
*
    ADD [  0054+  0087]  0054  1  5.0  524.38    0.95  5.17  12.04  n/a   0.000
*
    CHANNEL[ 2:  0054]   0088  1  5.0  524.38    0.95  5.33  12.03  n/a   0.000
*
    READ STORM                 15.0
    [ Ptot= 36.00 mm ]
    fname : C:\Users\pchiocchio\AppData\Local\Temp\3c91563b-7bef-4116-8770-530a22aa1648\7f7866ec-ed8a-491d-87e1-
    remark: 2 Year 6 Hour AES (Bloor, TRCA)
*
 *  CALIB NASHYD         0048  1  5.0   34.24    0.06  5.42   5.41 0.15   0.000
    [CN=72.0         ]
    [ N = 1.5:Tp 1.82]
*
    ADD [  0048+  0088]  0049  3  5.0  558.62    1.01  5.42  11.63  n/a   0.000
*
    READ STORM                 15.0
    [ Ptot= 36.00 mm ]
    fname : C:\Users\pchiocchio\AppData\Local\Temp\3c91563b-7bef-4116-8770-530a22aa1648\7f7866ec-ed8a-491d-87e1-
    remark: 2 Year 6 Hour AES (Bloor, TRCA)
*
```

```
 *  CALIB STANDHYD       0118  1  5.0   13.25    1.07  2.75  32.20 0.89   0.000
    [I%=86.0:S%= 2.00]
*
    READ STORM                 15.0
    [ Ptot= 36.00 mm ]
    fname : C:\Users\pchiocchio\AppData\Local\Temp\3c91563b-7bef-4116-8770-530a22aa1648\7f7866ec-ed8a-491d-87e1-
    remark: 2 Year 6 Hour AES (Bloor, TRCA)
*
 *  CALIB STANDHYD       0123  1  5.0    8.30    0.71  2.75  32.80 0.91   0.000
    [I%=89.0:S%= 2.00]
*
    READ STORM                 15.0
    [ Ptot= 36.00 mm ]
    fname : C:\Users\pchiocchio\AppData\Local\Temp\3c91563b-7bef-4116-8770-530a22aa1648\7f7866ec-ed8a-491d-87e1-
    remark: 2 Year 6 Hour AES (Bloor, TRCA)
*
 *  CALIB STANDHYD       0125  1  5.0   13.70    1.15  2.75  32.80 0.91   0.000
    [I%=89.0:S%= 2.00]
*
```

```
==========================================================================================

       V    V   I    SSSSS  U   U    A    L              (v 6.2.2001)
       V    V   I    SS     U   U   A A   L
        V  V    I     SS    U   U  AAAAA  L
        V  V    I      SS   U   U  A   A  L
         VV     I    SSSSS  UUUUU  A   A  LLLLL

        OOO   TTTTT  TTTTT  H   H  Y   Y  M   M   OOO    TM
       O   O    T      T    H   H   Y Y   MM MM  O   O
       O   O    T      T    H   H    Y    M   M  O   O
        OOO     T      T    H   H    Y    M   M   OOO
Developed and Distributed by Smart City Water Inc
Copyright 2007 - 2020 Smart City Water Inc
All rights reserved.


                  *****  S U M M A R Y   O U T P U T  *****


  Input   filename: C:\Program Files (x86)\Visual OTTHYMO 6.2\VO2\voin.dat
  Output  filename: C:\Users\pchiocchio\AppData\Local\Civica\VH5\d59fad6f-510d-48b8-a35a-1bee91f156cc\21bf8bb3-c531-4f75-aa02-
e5c1113d2fac\s
  Summary filename: C:\Users\pchiocchio\AppData\Local\Civica\VH5\d59fad6f-510d-48b8-a35a-1bee91f156cc\21bf8bb3-c531-4f75-aa02-
e5c1113d2fac\s


DATE: 02/02/2021                          TIME: 05:18:31

USER:


COMMENTS: ____________________________________________________________


  ************************************************
  ** SIMULATION : 2 - Year (12hr AES)           **
  ************************************************

  W/E COMMAND             HYD ID   DT    AREA  ' Qpeak Tpeak   R.V. R.C.   Qbase
                                   min     ha   '  cms   hrs     mm          cms

      START @  0.00 hrs
      --------------------
    READ STORM                 15.0
    [ Ptot= 42.00 mm ]
    fname : C:\Users\pchiocchio\AppData\Local\Temp\3c91563b-7bef-4116-8770-530a22aa1648\595a4f76-b08c-4b58-8d09-
    remark: 2 Year 12 Hour AES (Bloor, TRCA)
*
 ** CALIB NASHYD         0004  1  5.0   40.84    0.05 12.25   8.76 0.21   0.000
    [CN=75.0         ]
    [ N = 1.5:Tp 5.06]
*
    CHANNEL[ 2:  0004]   0066  1  5.0   40.84    0.04 13.67   8.78  n/a   0.000
*
    READ STORM                 15.0
    [ Ptot= 42.00 mm ]
    fname : C:\Users\pchiocchio\AppData\Local\Temp\3c91563b-7bef-4116-8770-530a22aa1648\595a4f76-b08c-4b58-8d09-
    remark: 2 Year 12 Hour AES (Bloor, TRCA)
*
 ** CALIB NASHYD         0005  1  5.0   34.73    0.02 17.17   8.20 0.20   0.000
    [CN=75.0         ]
    [ N = 1.5:Tp10.71]
*
    ADD [  0005+  0066]  0003  3  5.0   75.57    0.06 14.08   8.77  n/a   0.000
*
    PIPE   [ 2:  0003]   0120  1  5.0   75.57    0.06 14.33   8.77  n/a   0.000
*
    CHANNEL[ 2:  0120]   0080  1  5.0   75.57    0.06 14.75   8.77  n/a   0.000
*
    READ STORM                 15.0
    [ Ptot= 42.00 mm ]
    fname : C:\Users\pchiocchio\AppData\Local\Temp\3c91563b-7bef-4116-8770-530a22aa1648\595a4f76-b08c-4b58-8d09-
    remark: 2 Year 12 Hour AES (Bloor, TRCA)
*
 ** CALIB STANDHYD       0104  1  5.0   83.92    3.79  5.25  36.21 0.86   0.000
    [I%=78.0:S%= 2.00]
*
 ** Reservoir
    OUTFLOW:             0105  1  5.0   83.92    0.49  7.67  32.60  n/a   0.000
*
    DUHYD                0128  1  5.0   83.92    0.49  7.67  32.60  n/a   0.000
       MAJOR SYSTEM:     0128  2  5.0    0.00    0.00  0.00   0.00  n/a   0.000
       MINOR SYSTEM:     0128  3  5.0   83.92    0.49  7.67  32.60  n/a   0.000
*
    READ STORM                 15.0
    [ Ptot= 42.00 mm ]
    fname : C:\Users\pchiocchio\AppData\Local\Temp\3c91563b-7bef-4116-8770-530a22aa1648\595a4f76-b08c-4b58-8d09-
    remark: 2 Year 12 Hour AES (Bloor, TRCA)
*
 ** CALIB STANDHYD       0127  1  5.0    3.04    0.10  5.25  26.62 0.63   0.000
    [I%=34.0:S%= 2.00]
*
    ADD [  0127+  0128]  0122  3  5.0    3.04    0.10  5.25  26.62  n/a   0.000
```

```
*
    ADD [  0122+  0080]  0122  1  5.0   78.61    0.10  5.25   9.46  n/a   0.000
*
    CHANNEL[ 2:  0122]   0081  1  5.0   78.61    0.10  5.25   9.46  n/a   0.000
*
    READ STORM                 15.0
    [ Ptot= 42.00 mm ]
    fname : C:\Users\pchiocchio\AppData\Local\Temp\3c91563b-7bef-4116-8770-530a22aa1648\595a4f76-b08c-4b58-8d09-
    remark: 2 Year 12 Hour AES (Bloor, TRCA)
*
 ** CALIB STANDHYD       0117  1  5.0    7.94    0.41  5.25  39.47 0.94   0.000
    [I%=93.0:S%= 2.00]
*
    ADD [  0117+  0128]  0035  3  5.0   91.86    0.54  7.25  33.19  n/a   0.000
*
    ADD [  0035+  0081]  0035  1  5.0  170.47    0.57  7.25  22.25  n/a   0.000
*
    CHANNEL[ 2:  0035]   0082  1  5.0  170.47    0.56  8.00  22.23  n/a   0.000
*
    READ STORM                 15.0
    [ Ptot= 42.00 mm ]
    fname : C:\Users\pchiocchio\AppData\Local\Temp\3c91563b-7bef-4116-8770-530a22aa1648\595a4f76-b08c-4b58-8d09-
    remark: 2 Year 12 Hour AES (Bloor, TRCA)
*
 ** CALIB NASHYD         0044  1  5.0   24.38    0.01 17.17   8.19 0.20   0.000
    [CN=75.0         ]
    [ N = 1.5:Tp10.73]
*
    ADD [  0044+  0082]  0056  3  5.0  194.85    0.56  8.00  20.54  n/a   0.000
*
    CHANNEL[ 2:  0056]   0083  1  5.0  194.85    0.56  8.42  20.53  n/a   0.000
*
    READ STORM                 15.0
    [ Ptot= 42.00 mm ]
    fname : C:\Users\pchiocchio\AppData\Local\Temp\3c91563b-7bef-4116-8770-530a22aa1648\595a4f76-b08c-4b58-8d09-
    remark: 2 Year 12 Hour AES (Bloor, TRCA)
*
 ** CALIB NASHYD         0043  1  5.0   10.09    0.03  8.58   9.12 0.22   0.000
    [CN=76.0         ]
    [ N = 1.5:Tp 2.02]
*
    READ STORM                 15.0
    [ Ptot= 42.00 mm ]
    fname : C:\Users\pchiocchio\AppData\Local\Temp\3c91563b-7bef-4116-8770-530a22aa1648\595a4f76-b08c-4b58-8d09-
    remark: 2 Year 12 Hour AES (Bloor, TRCA)
*
 ** CALIB NASHYD         0045  1  5.0    5.34    0.02  7.75   9.11 0.22   0.000
    [CN=76.0         ]
    [ N = 1.5:Tp 1.39]
*
    ADD [  0043+  0045]  0086  3  5.0   15.43    0.04  8.25   9.12  n/a   0.000
*
    ADD [  0086+  0083]  0086  1  5.0  210.28    0.60  8.42  19.69  n/a   0.000
*
    CHANNEL[ 2:  0086]   0085  1  5.0  210.28    0.60  8.67  19.68  n/a   0.000
*
    READ STORM                 15.0
    [ Ptot= 42.00 mm ]
    fname : C:\Users\pchiocchio\AppData\Local\Temp\3c91563b-7bef-4116-8770-530a22aa1648\595a4f76-b08c-4b58-8d09-
    remark: 2 Year 12 Hour AES (Bloor, TRCA)
*
 ** CALIB NASHYD         0042  1  5.0   33.34    0.06  9.67   9.12 0.22   0.000
    [CN=76.0         ]
    [ N = 1.5:Tp 3.02]
*
    READ STORM                 15.0
    [ Ptot= 42.00 mm ]
    fname : C:\Users\pchiocchio\AppData\Local\Temp\3c91563b-7bef-4116-8770-530a22aa1648\595a4f76-b08c-4b58-8d09-
    remark: 2 Year 12 Hour AES (Bloor, TRCA)
*
 ** CALIB NASHYD         0046  1  5.0   75.42    0.08 12.67   9.09 0.22   0.000
    [CN=76.0         ]
    [ N = 1.5:Tp 5.71]
*
    ADD [  0042+  0046]  0055  3  5.0  108.76    0.14 11.25   9.12  n/a   0.000
*
    ADD [  0055+  0085]  0055  1  5.0  319.04    0.72  8.83  16.08  n/a   0.000
*
    CHANNEL[ 2:  0055]   0087  1  5.0  319.04    0.72  9.00  16.08  n/a   0.000
*
    READ STORM                 15.0
    [ Ptot= 42.00 mm ]
    fname : C:\Users\pchiocchio\AppData\Local\Temp\3c91563b-7bef-4116-8770-530a22aa1648\595a4f76-b08c-4b58-8d09-
    remark: 2 Year 12 Hour AES (Bloor, TRCA)
*
 ** CALIB NASHYD         0006  1  5.0    2.42    0.01  8.08   8.76 0.21   0.000
    [CN=75.0         ]
    [ N = 1.5:Tp 1.50]
*
    READ STORM                 15.0
    [ Ptot= 42.00 mm ]
    fname : C:\Users\pchiocchio\AppData\Local\Temp\3c91563b-7bef-4116-8770-530a22aa1648\595a4f76-b08c-4b58-8d09-
    remark: 2 Year 12 Hour AES (Bloor, TRCA)
*
 *  CALIB STANDHYD       0113  1  5.0    0.62    0.02  5.25  30.09 0.72   0.000
```

```
    [I%=50.0:S%= 2.00]
*
    ADD [  0113+  0006]  0131  3  5.0    3.04    0.03  5.25  13.11  n/a   0.000
*
    CHANNEL[ 2:  0131]   0091  1  5.0    3.04    0.02  5.33  13.11  n/a   0.000
*
    READ STORM                 15.0
    [ Ptot= 42.00 mm ]
    fname : C:\Users\pchiocchio\AppData\Local\Temp\3c91563b-7bef-4116-8770-530a22aa1648\595a4f76-b08c-4b58-8d09-
    remark: 2 Year 12 Hour AES (Bloor, TRCA)
*
 *  CALIB NASHYD         0008  1  5.0    0.95    0.00  8.17   8.76 0.21   0.000
    [CN=75.0         ]
    [ N = 1.5:Tp 1.55]
*
    READ STORM                 15.0
    [ Ptot= 42.00 mm ]
    fname : C:\Users\pchiocchio\AppData\Local\Temp\3c91563b-7bef-4116-8770-530a22aa1648\595a4f76-b08c-4b58-8d09-
    remark: 2 Year 12 Hour AES (Bloor, TRCA)
*
 *  CALIB STANDHYD       0111  1  5.0    0.55    0.02  5.25  30.09 0.72   0.000
    [I%=50.0:S%= 2.00]
*
    READ STORM                 15.0
    [ Ptot= 42.00 mm ]
    fname : C:\Users\pchiocchio\AppData\Local\Temp\3c91563b-7bef-4116-8770-530a22aa1648\595a4f76-b08c-4b58-8d09-
    remark: 2 Year 12 Hour AES (Bloor, TRCA)
*
 *  CALIB STANDHYD       0133  1  5.0    1.76    0.08  5.25  33.15 0.79   0.000
    [I%=64.0:S%= 2.00]
*
    ADD [  0111+  0133]  0011  3  5.0    2.31    0.10  5.25  32.42  n/a   0.000
*
    ADD [  0011+  0008]  0011  1  5.0    3.26    0.10  5.25  25.55  n/a   0.000
*
    ADD [  0011+  0091]  0011  3  5.0    6.30    0.12  5.25  19.55  n/a   0.000
*
    CHANNEL[ 2:  0011]   0092  1  5.0    6.30    0.11  5.25  19.55  n/a   0.000
*
    READ STORM                 15.0
    [ Ptot= 42.00 mm ]
    fname : C:\Users\pchiocchio\AppData\Local\Temp\3c91563b-7bef-4116-8770-530a22aa1648\595a4f76-b08c-4b58-8d09-
    remark: 2 Year 12 Hour AES (Bloor, TRCA)
*
 *  CALIB NASHYD         0038  1  5.0    7.23    0.01 11.08   8.77 0.21   0.000
    [CN=75.0         ]
    [ N = 1.5:Tp 4.06]
*
    ADD [  0038+  0092]  0052  3  5.0   13.53    0.11  5.25  13.79  n/a   0.000
*
    READ STORM                 15.0
    [ Ptot= 42.00 mm ]
    fname : C:\Users\pchiocchio\AppData\Local\Temp\3c91563b-7bef-4116-8770-530a22aa1648\595a4f76-b08c-4b58-8d09-
    remark: 2 Year 12 Hour AES (Bloor, TRCA)
*
 *  CALIB NASHYD         0007  1  5.0    0.22    0.00  6.25   8.70 0.21   0.000
    [CN=75.0         ]
    [ N = 1.5:Tp 0.46]
*
    CHANNEL[ 2:  0007]   0089  1  5.0    0.22    0.00  6.83   8.68  n/a   0.000
*
    READ STORM                 15.0
    [ Ptot= 42.00 mm ]
    fname : C:\Users\pchiocchio\AppData\Local\Temp\3c91563b-7bef-4116-8770-530a22aa1648\595a4f76-b08c-4b58-8d09-
    remark: 2 Year 12 Hour AES (Bloor, TRCA)
*
 *  CALIB NASHYD         0009  1  5.0    2.18    0.00  9.50   8.76 0.21   0.000
    [CN=75.0         ]
    [ N = 1.5:Tp 2.82]
*
    READ STORM                 15.0
    [ Ptot= 42.00 mm ]
    fname : C:\Users\pchiocchio\AppData\Local\Temp\3c91563b-7bef-4116-8770-530a22aa1648\595a4f76-b08c-4b58-8d09-
    remark: 2 Year 12 Hour AES (Bloor, TRCA)
*
 *  CALIB STANDHYD       0114  1  5.0    0.46    0.02  5.25  30.09 0.72   0.000
    [I%=50.0:S%= 2.00]
*
    READ STORM                 15.0
    [ Ptot= 42.00 mm ]
    fname : C:\Users\pchiocchio\AppData\Local\Temp\3c91563b-7bef-4116-8770-530a22aa1648\595a4f76-b08c-4b58-8d09-
    remark: 2 Year 12 Hour AES (Bloor, TRCA)
*
 *  CALIB STANDHYD       0132  1  5.0    1.32    0.06  5.25  33.15 0.79   0.000
    [I%=64.0:S%= 2.00]
*
    ADD [  0114+  0132]  0010  3  5.0    1.79    0.08  5.25  32.35  n/a   0.000
*
    ADD [  0010+  0089]  0010  1  5.0    2.01    0.08  5.25  29.75  n/a   0.000
*
    ADD [  0010+  0009]  0010  3  5.0    4.18    0.08  5.25  18.82  n/a   0.000
*
    READ STORM                 15.0
    [ Ptot= 42.00 mm ]
    fname : C:\Users\pchiocchio\AppData\Local\Temp\3c91563b-7bef-4116-8770-530a22aa1648\595a4f76-b08c-4b58-8d09-
```

```
    remark: 2 Year 12 Hour AES (Bloor, TRCA)
*
 *  CALIB NASHYD         0100  1  5.0   14.67    0.04  7.67   6.75 0.16   0.000
    [CN=68.0         ]
    [ N = 1.5:Tp 1.29]
*
    READ STORM                 15.0
    [ Ptot= 42.00 mm ]
    fname : C:\Users\pchiocchio\AppData\Local\Temp\3c91563b-7bef-4116-8770-530a22aa1648\595a4f76-b08c-4b58-8d09-
    remark: 2 Year 12 Hour AES (Bloor, TRCA)
*
 *  CALIB NASHYD         0102  1  5.0    0.88    0.00  6.33   6.72 0.16   0.000
    [CN=68.0         ]
    [ N = 1.5:Tp 0.62]
*
    ADD [  0100+  0102]  0137  3  5.0   15.55    0.04  7.50   6.75  n/a   0.000
*
    ADD [  0010+  0137]  0130  3  5.0   19.73    0.09  5.25   9.31  n/a   0.000
*
    CHANNEL[ 2:  0130]   0094  1  5.0   19.73    0.06  6.33   9.31  n/a   0.000
*
    READ STORM                 15.0
    [ Ptot= 42.00 mm ]
    fname : C:\Users\pchiocchio\AppData\Local\Temp\3c91563b-7bef-4116-8770-530a22aa1648\595a4f76-b08c-4b58-8d09-
    remark: 2 Year 12 Hour AES (Bloor, TRCA)
*
 *  CALIB NASHYD         0037  1  5.0    9.00    0.01 12.33   8.76 0.21   0.000
    [CN=75.0         ]
    [ N = 1.5:Tp 5.09]
*
    ADD [  0037+  0094]  0053  3  5.0   28.73    0.06  7.33   9.14  n/a   0.000
*
    READ STORM                 15.0
    [ Ptot= 42.00 mm ]
    fname : C:\Users\pchiocchio\AppData\Local\Temp\3c91563b-7bef-4116-8770-530a22aa1648\595a4f76-b08c-4b58-8d09-
    remark: 2 Year 12 Hour AES (Bloor, TRCA)
*
 *  CALIB NASHYD         0013  1  5.0    1.42    0.01  7.25   8.75 0.21   0.000
    [CN=75.0         ]
    [ N = 1.5:Tp 1.01]
*
    READ STORM                 15.0
    [ Ptot= 42.00 mm ]
    fname : C:\Users\pchiocchio\AppData\Local\Temp\3c91563b-7bef-4116-8770-530a22aa1648\595a4f76-b08c-4b58-8d09-
    remark: 2 Year 12 Hour AES (Bloor, TRCA)
*
 *  CALIB NASHYD         0014  1  5.0    0.93    0.00  7.42   8.75 0.21   0.000
    [CN=75.0         ]
    [ N = 1.5:Tp 1.18]
*
    READ STORM                 15.0
    [ Ptot= 42.00 mm ]
    fname : C:\Users\pchiocchio\AppData\Local\Temp\3c91563b-7bef-4116-8770-530a22aa1648\595a4f76-b08c-4b58-8d09-
    remark: 2 Year 12 Hour AES (Bloor, TRCA)
*
 *  CALIB STANDHYD       0109  1  5.0   50.15    2.13  5.25  34.03 0.81   0.000
    [I%=68.0:S%= 2.00]
*
 ** Reservoir
    OUTFLOW:             0110  1  5.0   50.15    0.28  7.67  30.01  n/a   0.000
*
    READ STORM                 15.0
    [ Ptot= 42.00 mm ]
    fname : C:\Users\pchiocchio\AppData\Local\Temp\3c91563b-7bef-4116-8770-530a22aa1648\595a4f76-b08c-4b58-8d09-
    remark: 2 Year 12 Hour AES (Bloor, TRCA)
*
 *  CALIB STANDHYD       0115  1  5.0    0.23    0.01  5.25  30.06 0.72   0.000
    [I%=50.0:S%= 2.00]
*
    READ STORM                 15.0
    [ Ptot= 42.00 mm ]
    fname : C:\Users\pchiocchio\AppData\Local\Temp\3c91563b-7bef-4116-8770-530a22aa1648\595a4f76-b08c-4b58-8d09-
    remark: 2 Year 12 Hour AES (Bloor, TRCA)
*
 *  CALIB STANDHYD       0116  1  5.0    0.29    0.01  5.25  30.07 0.72   0.000
    [I%=50.0:S%= 2.00]
*
    READ STORM                 15.0
    [ Ptot= 42.00 mm ]
    fname : C:\Users\pchiocchio\AppData\Local\Temp\3c91563b-7bef-4116-8770-530a22aa1648\595a4f76-b08c-4b58-8d09-
    remark: 2 Year 12 Hour AES (Bloor, TRCA)
*
 *  CALIB STANDHYD       0134  1  5.0    0.54    0.02  5.25  33.14 0.79   0.000
    [I%=64.0:S%= 2.00]
*
    READ STORM                 15.0
    [ Ptot= 42.00 mm ]
    fname : C:\Users\pchiocchio\AppData\Local\Temp\3c91563b-7bef-4116-8770-530a22aa1648\595a4f76-b08c-4b58-8d09-
    remark: 2 Year 12 Hour AES (Bloor, TRCA)
*
 *  CALIB STANDHYD       0135  1  5.0    0.26    0.01  5.25  33.12 0.79   0.000
    [I%=64.0:S%= 2.00]
*
    ADD [  0110+  0115]  0012  3  5.0   50.38    0.29  7.67  30.01  n/a   0.000
*
```

```
    ADD [  0012+  0116]  0012  1  5.0   50.67    0.29  7.67  30.01  n/a   0.000
*
    ADD [  0012+  0013]  0012  3  5.0   52.09    0.29  7.67  29.43  n/a   0.000
*
    ADD [  0012+  0134]  0012  1  5.0   52.63    0.29  7.67  29.47  n/a   0.000
*
    ADD [  0012+  0135]  0012  3  5.0   52.89    0.30  7.67  29.49  n/a   0.000
*
    ADD [  0012+  0014]  0012  1  5.0   53.82    0.30  7.67  29.13  n/a   0.000
*
    CHANNEL[ 2:  0012]   0093  1  5.0   53.82    0.30  7.92  29.11  n/a   0.000
*
    READ STORM                 15.0
    [ Ptot= 42.00 mm ]
    fname : C:\Users\pchiocchio\AppData\Local\Temp\3c91563b-7bef-4116-8770-530a22aa1648\595a4f76-b08c-4b58-8d09-
    remark: 2 Year 12 Hour AES (Bloor, TRCA)
*
 *  CALIB NASHYD         0039  1  5.0   13.25    0.02 11.08   8.77 0.21   0.000
    [CN=75.0         ]
    [ N = 1.5:Tp 4.05]
*
    ADD [  0039+  0093]  0051  3  5.0   67.07    0.31  8.00  25.09  n/a   0.000
*
    READ STORM                 15.0
    [ Ptot= 42.00 mm ]
    fname : C:\Users\pchiocchio\AppData\Local\Temp\3c91563b-7bef-4116-8770-530a22aa1648\595a4f76-b08c-4b58-8d09-
    remark: 2 Year 12 Hour AES (Bloor, TRCA)
*
 *  CALIB NASHYD         0040  1  5.0    7.26    0.01 10.58   8.77 0.21   0.000
    [CN=75.0         ]
    [ N = 1.5:Tp 3.69]
*
    READ STORM                 15.0
    [ Ptot= 42.00 mm ]
    fname : C:\Users\pchiocchio\AppData\Local\Temp\3c91563b-7bef-4116-8770-530a22aa1648\595a4f76-b08c-4b58-8d09-
    remark: 2 Year 12 Hour AES (Bloor, TRCA)
*
 *  CALIB NASHYD         0136  1  5.0    4.10    0.02  6.33   6.73 0.16   0.000
    [CN=68.0         ]
    [ N = 1.5:Tp 0.62]
*
    CHANNEL[ 2:  0136]   0101  1  5.0    4.10    0.02  6.83   6.73  n/a   0.000
*
    ADD [  0101+  0040]  0090  3  5.0   11.36    0.02  7.42   8.04  n/a   0.000
*
    ADD [  0090+  0051]  0090  1  5.0   78.43    0.34  7.92  22.62  n/a   0.000
*
    ADD [  0090+  0052]  0090  3  5.0   91.96    0.37  7.75  21.32  n/a   0.000
*
    ADD [  0090+  0053]  0090  1  5.0  120.69    0.43  7.75  18.42  n/a   0.000
*
    CHANNEL[ 2:  0090]   0095  1  5.0  120.69    0.43  7.83  18.42  n/a   0.000
*
    READ STORM                 15.0
    [ Ptot= 42.00 mm ]
    fname : C:\Users\pchiocchio\AppData\Local\Temp\3c91563b-7bef-4116-8770-530a22aa1648\595a4f76-b08c-4b58-8d09-
    remark: 2 Year 12 Hour AES (Bloor, TRCA)
*
 *  CALIB NASHYD         0041  1  5.0   12.70    0.02 10.00   8.77 0.21   0.000
    [CN=75.0         ]
    [ N = 1.5:Tp 3.25]
*
    ADD [  0041+  0095]  0050  3  5.0  133.39    0.45  7.92  17.50  n/a   0.000
*
    READ STORM                 15.0
    [ Ptot= 42.00 mm ]
    fname : C:\Users\pchiocchio\AppData\Local\Temp\3c91563b-7bef-4116-8770-530a22aa1648\595a4f76-b08c-4b58-8d09-
    remark: 2 Year 12 Hour AES (Bloor, TRCA)
*
 *  CALIB NASHYD         0047  1  5.0   71.95    0.08 12.33   9.11 0.22   0.000
    [CN=76.0         ]
    [ N = 1.5:Tp 5.10]
*
    ADD [  0047+  0050]  0054  3  5.0  205.34    0.52  8.25  14.57  n/a   0.000
*
    ADD [  0054+  0087]  0054  1  5.0  524.38    1.23  8.67  15.49  n/a   0.000
*
    CHANNEL[ 2:  0054]   0088  1  5.0  524.38    1.23  8.83  15.48  n/a   0.000
*
    READ STORM                 15.0
    [ Ptot= 42.00 mm ]
    fname : C:\Users\pchiocchio\AppData\Local\Temp\3c91563b-7bef-4116-8770-530a22aa1648\595a4f76-b08c-4b58-8d09-
    remark: 2 Year 12 Hour AES (Bloor, TRCA)
*
 *  CALIB NASHYD         0048  1  5.0   34.24    0.08  8.42   7.82 0.19   0.000
    [CN=72.0         ]
    [ N = 1.5:Tp 1.82]
*
    ADD [  0048+  0088]  0049  3  5.0  558.62    1.31  8.83  15.01  n/a   0.000
*
    READ STORM                 15.0
    [ Ptot= 42.00 mm ]
    fname : C:\Users\pchiocchio\AppData\Local\Temp\3c91563b-7bef-4116-8770-530a22aa1648\595a4f76-b08c-4b58-8d09-
    remark: 2 Year 12 Hour AES (Bloor, TRCA)
*
```

```
 *  CALIB STANDHYD       0118  1  5.0   13.25    0.65  5.25  37.95 0.90   0.000
    [I%=86.0:S%= 2.00]
*
    READ STORM                 15.0
    [ Ptot= 42.00 mm ]
    fname : C:\Users\pchiocchio\AppData\Local\Temp\3c91563b-7bef-4116-8770-530a22aa1648\595a4f76-b08c-4b58-8d09-
    remark: 2 Year 12 Hour AES (Bloor, TRCA)
*
 *  CALIB STANDHYD       0123  1  5.0    8.30    0.42  5.25  38.60 0.92   0.000
    [I%=89.0:S%= 2.00]
*
    READ STORM                 15.0
    [ Ptot= 42.00 mm ]
    fname : C:\Users\pchiocchio\AppData\Local\Temp\3c91563b-7bef-4116-8770-530a22aa1648\595a4f76-b08c-4b58-8d09-
    remark: 2 Year 12 Hour AES (Bloor, TRCA)
*
 *  CALIB STANDHYD       0125  1  5.0   13.70    0.69  5.25  38.60 0.92   0.000
    [I%=89.0:S%= 2.00]
*
```

```
==========================================================================================

       V    V   I    SSSSS  U   U    A    L              (v 6.2.2001)
       V    V   I    SS     U   U   A A   L
        V  V    I     SS    U   U  AAAAA  L
        V  V    I      SS   U   U  A   A  L
         VV     I    SSSSS  UUUUU  A   A  LLLLL

        OOO   TTTTT  TTTTT  H   H  Y   Y  M   M   OOO    TM
       O   O    T      T    H   H   Y Y   MM MM  O   O
       O   O    T      T    H   H    Y    M   M  O   O
        OOO     T      T    H   H    Y    M   M   OOO
Developed and Distributed by Smart City Water Inc
Copyright 2007 - 2020 Smart City Water Inc
All rights reserved.


                  *****  S U M M A R Y   O U T P U T  *****


  Input   filename: C:\Program Files (x86)\Visual OTTHYMO 6.2\VO2\voin.dat
  Output  filename: C:\Users\pchiocchio\AppData\Local\Civica\VH5\d59fad6f-510d-48b8-a35a-1bee91f156cc\748f44fe-8611-4fe7-a38f-
e4eb481f115f\s
  Summary filename: C:\Users\pchiocchio\AppData\Local\Civica\VH5\d59fad6f-510d-48b8-a35a-1bee91f156cc\748f44fe-8611-4fe7-a38f-
e4eb481f115f\s


DATE: 02/02/2021                          TIME: 05:18:33

USER:


COMMENTS: ____________________________________________________________


  ************************************************
  ** SIMULATION : 5 - Year (6hr AES)            **
  ************************************************

  W/E COMMAND             HYD ID   DT    AREA  ' Qpeak Tpeak   R.V. R.C.   Qbase
                                   min     ha   '  cms   hrs     mm          cms

      START @  0.00 hrs
      --------------------
    READ STORM                 15.0
    [ Ptot= 47.81 mm ]
    fname : C:\Users\pchiocchio\AppData\Local\Temp\3c91563b-7bef-4116-8770-530a22aa1648\8473c2e0-bfe2-4798-bce2-
    remark: 5 Year 6 Hour AES (Bloor, TRCA)
*
 ** CALIB NASHYD         0004  1  5.0   40.84    0.06  8.33  11.66 0.24   0.000
    [CN=75.0         ]
    [ N = 1.5:Tp 5.06]
*
    CHANNEL[ 2:  0004]   0066  1  5.0   40.84    0.06 10.08  11.67  n/a   0.000
*
    READ STORM                 15.0
    [ Ptot= 47.81 mm ]
    fname : C:\Users\pchiocchio\AppData\Local\Temp\3c91563b-7bef-4116-8770-530a22aa1648\8473c2e0-bfe2-4798-bce2-
    remark: 5 Year 6 Hour AES (Bloor, TRCA)
*
 ** CALIB NASHYD         0005  1  5.0   34.73    0.03 13.92  10.99 0.23   0.000
    [CN=75.0         ]
    [ N = 1.5:Tp10.71]
*
    ADD [  0005+  0066]  0003  3  5.0   75.57    0.09 10.58  11.66  n/a   0.000
*
    PIPE   [ 2:  0003]   0120  1  5.0   75.57    0.09 10.67  11.66  n/a   0.000
*
    CHANNEL[ 2:  0120]   0080  1  5.0   75.57    0.09 11.42  11.66  n/a   0.000
*
    READ STORM                 15.0
    [ Ptot= 47.81 mm ]
    fname : C:\Users\pchiocchio\AppData\Local\Temp\3c91563b-7bef-4116-8770-530a22aa1648\8473c2e0-bfe2-4798-bce2-
    remark: 5 Year 6 Hour AES (Bloor, TRCA)
*
 ** CALIB STANDHYD       0104  1  5.0   83.92    8.12  2.75  41.69 0.87   0.000
    [I%=78.0:S%= 2.00]
*
 ** Reservoir
    OUTFLOW:             0105  1  5.0   83.92    0.72  4.50  38.17  n/a   0.000
*
    DUHYD                0128  1  5.0   83.92    0.72  4.50  38.17  n/a   0.000
       MAJOR SYSTEM:     0128  2  5.0    6.44    0.23  4.50  38.17  n/a   0.000
       MINOR SYSTEM:     0128  3  5.0   77.48    0.49  3.25  38.17  n/a   0.000
*
    READ STORM                 15.0
    [ Ptot= 47.81 mm ]
    fname : C:\Users\pchiocchio\AppData\Local\Temp\3c91563b-7bef-4116-8770-530a22aa1648\8473c2e0-bfe2-4798-bce2-
    remark: 5 Year 6 Hour AES (Bloor, TRCA)
*
 *  CALIB STANDHYD       0127  1  5.0    3.04    0.22  2.75  31.44 0.66   0.000
    [I%=34.0:S%= 2.00]
*
    ADD [  0127+  0128]  0122  3  5.0    9.48    0.26  4.25  36.01  n/a   0.000
```

```
*
    ADD [  0122+  0080]  0122  1  5.0   85.05    0.27  4.25  14.38  n/a   0.000
*
    CHANNEL[ 2:  0122]   0081  1  5.0   85.05    0.27  4.58  14.38  n/a   0.000
*
    READ STORM                 15.0
    [ Ptot= 47.81 mm ]
    fname : C:\Users\pchiocchio\AppData\Local\Temp\3c91563b-7bef-4116-8770-530a22aa1648\8473c2e0-bfe2-4798-bce2-
    remark: 5 Year 6 Hour AES (Bloor, TRCA)
*
 *  CALIB STANDHYD       0117  1  5.0    7.94    0.94  2.75  45.18 0.94   0.000
    [I%=93.0:S%= 2.00]
*
    ADD [  0117+  0128]  0035  3  5.0   85.42    0.99  2.75  38.82  n/a   0.000
*
    ADD [  0035+  0081]  0035  1  5.0  170.47    1.17  2.75  26.62  n/a   0.000
*
    CHANNEL[ 2:  0035]   0082  1  5.0  170.47    0.83  3.83  26.61  n/a   0.000
*
    READ STORM                 15.0
    [ Ptot= 47.81 mm ]
    fname : C:\Users\pchiocchio\AppData\Local\Temp\3c91563b-7bef-4116-8770-530a22aa1648\8473c2e0-bfe2-4798-bce2-
    remark: 5 Year 6 Hour AES (Bloor, TRCA)
*
 *  CALIB NASHYD         0044  1  5.0   24.38    0.02 13.92  10.99 0.23   0.000
    [CN=75.0         ]
    [ N = 1.5:Tp10.73]
*
    ADD [  0044+  0082]  0056  3  5.0  194.85    0.84  4.25  24.73  n/a   0.000
*
    CHANNEL[ 2:  0056]   0083  1  5.0  194.85    0.83  4.42  24.72  n/a   0.000
*
    READ STORM                 15.0
    [ Ptot= 47.81 mm ]
    fname : C:\Users\pchiocchio\AppData\Local\Temp\3c91563b-7bef-4116-8770-530a22aa1648\8473c2e0-bfe2-4798-bce2-
    remark: 5 Year 6 Hour AES (Bloor, TRCA)
*
 *  CALIB NASHYD         0043  1  5.0   10.09    0.04  5.58  12.10 0.25   0.000
    [CN=76.0         ]
    [ N = 1.5:Tp 2.02]
*
    READ STORM                 15.0
    [ Ptot= 47.81 mm ]
    fname : C:\Users\pchiocchio\AppData\Local\Temp\3c91563b-7bef-4116-8770-530a22aa1648\8473c2e0-bfe2-4798-bce2-
    remark: 5 Year 6 Hour AES (Bloor, TRCA)
*
 *  CALIB NASHYD         0045  1  5.0    5.34    0.03  4.83  12.10 0.25   0.000
    [CN=76.0         ]
    [ N = 1.5:Tp 1.39]
*
    ADD [  0043+  0045]  0086  3  5.0   15.43    0.06  5.17  12.10  n/a   0.000
*
    ADD [  0086+  0083]  0086  1  5.0  210.28    0.89  4.50  23.80  n/a   0.000
*
    CHANNEL[ 2:  0086]   0085  1  5.0  210.28    0.89  4.83  23.79  n/a   0.000
*
    READ STORM                 15.0
    [ Ptot= 47.81 mm ]
    fname : C:\Users\pchiocchio\AppData\Local\Temp\3c91563b-7bef-4116-8770-530a22aa1648\8473c2e0-bfe2-4798-bce2-
    remark: 5 Year 6 Hour AES (Bloor, TRCA)
*
 *  CALIB NASHYD         0042  1  5.0   33.34    0.09  6.50  12.11 0.25   0.000
    [CN=76.0         ]
    [ N = 1.5:Tp 3.02]
*
    READ STORM                 15.0
    [ Ptot= 47.81 mm ]
    fname : C:\Users\pchiocchio\AppData\Local\Temp\3c91563b-7bef-4116-8770-530a22aa1648\8473c2e0-bfe2-4798-bce2-
    remark: 5 Year 6 Hour AES (Bloor, TRCA)
*
 *  CALIB NASHYD         0046  1  5.0   75.42    0.11  9.00  12.08 0.25   0.000
    [CN=76.0         ]
    [ N = 1.5:Tp 5.71]
*
    ADD [  0042+  0046]  0055  3  5.0  108.76    0.19  7.42  12.11  n/a   0.000
*
    ADD [  0055+  0085]  0055  1  5.0  319.04    1.05  5.17  19.81  n/a   0.000
*
    CHANNEL[ 2:  0055]   0087  1  5.0  319.04    1.05  5.42  19.80  n/a   0.000
*
    READ STORM                 15.0
    [ Ptot= 47.81 mm ]
    fname : C:\Users\pchiocchio\AppData\Local\Temp\3c91563b-7bef-4116-8770-530a22aa1648\8473c2e0-bfe2-4798-bce2-
    remark: 5 Year 6 Hour AES (Bloor, TRCA)
*
 *  CALIB NASHYD         0006  1  5.0    2.42    0.01  4.92  11.66 0.24   0.000
    [CN=75.0         ]
    [ N = 1.5:Tp 1.50]
*
    READ STORM                 15.0
    [ Ptot= 47.81 mm ]
    fname : C:\Users\pchiocchio\AppData\Local\Temp\3c91563b-7bef-4116-8770-530a22aa1648\8473c2e0-bfe2-4798-bce2-
    remark: 5 Year 6 Hour AES (Bloor, TRCA)
*
 *  CALIB STANDHYD       0113  1  5.0    0.62    0.05  2.75  35.16 0.74   0.000
```

```
    [I%=50.0:S%= 2.00]
*
    ADD [  0113+  0006]  0131  3  5.0    3.04    0.06  2.75  16.45  n/a   0.000
*
    CHANNEL[ 2:  0131]   0091  1  5.0    3.04    0.04  2.83  16.45  n/a   0.000
*
    READ STORM                 15.0
    [ Ptot= 47.81 mm ]
    fname : C:\Users\pchiocchio\AppData\Local\Temp\3c91563b-7bef-4116-8770-530a22aa1648\8473c2e0-bfe2-4798-bce2-
    remark: 5 Year 6 Hour AES (Bloor, TRCA)
*
 *  CALIB NASHYD         0008  1  5.0    0.95    0.00  5.00  11.65 0.24   0.000
    [CN=75.0         ]
    [ N = 1.5:Tp 1.55]
*
    READ STORM                 15.0
    [ Ptot= 47.81 mm ]
    fname : C:\Users\pchiocchio\AppData\Local\Temp\3c91563b-7bef-4116-8770-530a22aa1648\8473c2e0-bfe2-4798-bce2-
    remark: 5 Year 6 Hour AES (Bloor, TRCA)
*
 *  CALIB STANDHYD       0111  1  5.0    0.55    0.05  2.75  35.16 0.74   0.000
    [I%=50.0:S%= 2.00]
*
    READ STORM                 15.0
    [ Ptot= 47.81 mm ]
    fname : C:\Users\pchiocchio\AppData\Local\Temp\3c91563b-7bef-4116-8770-530a22aa1648\8473c2e0-bfe2-4798-bce2-
    remark: 5 Year 6 Hour AES (Bloor, TRCA)
*
 *  CALIB STANDHYD       0133  1  5.0    1.76    0.17  2.75  38.42 0.80   0.000
    [I%=64.0:S%= 2.00]
*
    ADD [  0111+  0133]  0011  3  5.0    2.31    0.22  2.75  37.64  n/a   0.000
*
    ADD [  0011+  0008]  0011  1  5.0    3.26    0.22  2.75  30.10  n/a   0.000
*
    ADD [  0011+  0091]  0011  3  5.0    6.30    0.26  2.75  23.51  n/a   0.000
*
    CHANNEL[ 2:  0011]   0092  1  5.0    6.30    0.22  2.75  23.51  n/a   0.000
*
    READ STORM                 15.0
    [ Ptot= 47.81 mm ]
    fname : C:\Users\pchiocchio\AppData\Local\Temp\3c91563b-7bef-4116-8770-530a22aa1648\8473c2e0-bfe2-4798-bce2-
    remark: 5 Year 6 Hour AES (Bloor, TRCA)
*
 *  CALIB NASHYD         0038  1  5.0    7.23    0.01  7.42  11.67 0.24   0.000
    [CN=75.0         ]
    [ N = 1.5:Tp 4.06]
*
    ADD [  0038+  0092]  0052  3  5.0   13.53    0.22  2.75  17.18  n/a   0.000
*
    READ STORM                 15.0
    [ Ptot= 47.81 mm ]
    fname : C:\Users\pchiocchio\AppData\Local\Temp\3c91563b-7bef-4116-8770-530a22aa1648\8473c2e0-bfe2-4798-bce2-
    remark: 5 Year 6 Hour AES (Bloor, TRCA)
*
 *  CALIB NASHYD         0007  1  5.0    0.22    0.00  3.58  11.58 0.24   0.000
    [CN=75.0         ]
    [ N = 1.5:Tp 0.46]
*
    CHANNEL[ 2:  0007]   0089  1  5.0    0.22    0.00  4.25  11.55  n/a   0.000
*
    READ STORM                 15.0
    [ Ptot= 47.81 mm ]
    fname : C:\Users\pchiocchio\AppData\Local\Temp\3c91563b-7bef-4116-8770-530a22aa1648\8473c2e0-bfe2-4798-bce2-
    remark: 5 Year 6 Hour AES (Bloor, TRCA)
*
 *  CALIB NASHYD         0009  1  5.0    2.18    0.01  6.42  11.66 0.24   0.000
    [CN=75.0         ]
    [ N = 1.5:Tp 2.82]
*
    READ STORM                 15.0
    [ Ptot= 47.81 mm ]
    fname : C:\Users\pchiocchio\AppData\Local\Temp\3c91563b-7bef-4116-8770-530a22aa1648\8473c2e0-bfe2-4798-bce2-
    remark: 5 Year 6 Hour AES (Bloor, TRCA)
*
 *  CALIB STANDHYD       0114  1  5.0    0.46    0.04  2.75  35.15 0.74   0.000
    [I%=50.0:S%= 2.00]
*
    READ STORM                 15.0
    [ Ptot= 47.81 mm ]
    fname : C:\Users\pchiocchio\AppData\Local\Temp\3c91563b-7bef-4116-8770-530a22aa1648\8473c2e0-bfe2-4798-bce2-
    remark: 5 Year 6 Hour AES (Bloor, TRCA)
*
 *  CALIB STANDHYD       0132  1  5.0    1.32    0.13  2.75  38.42 0.80   0.000
    [I%=64.0:S%= 2.00]
*
    ADD [  0114+  0132]  0010  3  5.0    1.79    0.17  2.75  37.57  n/a   0.000
*
    ADD [  0010+  0089]  0010  1  5.0    2.01    0.17  2.75  34.72  n/a   0.000
*
    ADD [  0010+  0009]  0010  3  5.0    4.18    0.17  2.75  22.70  n/a   0.000
*
    READ STORM                 15.0
    [ Ptot= 47.81 mm ]
    fname : C:\Users\pchiocchio\AppData\Local\Temp\3c91563b-7bef-4116-8770-530a22aa1648\8473c2e0-bfe2-4798-bce2-
```

```
    remark: 5 Year 6 Hour AES (Bloor, TRCA)
*
 *  CALIB NASHYD         0100  1  5.0   14.67    0.06  4.75   9.07 0.19   0.000
    [CN=68.0         ]
    [ N = 1.5:Tp 1.29]
*
    READ STORM                 15.0
    [ Ptot= 47.81 mm ]
    fname : C:\Users\pchiocchio\AppData\Local\Temp\3c91563b-7bef-4116-8770-530a22aa1648\8473c2e0-bfe2-4798-bce2-
    remark: 5 Year 6 Hour AES (Bloor, TRCA)
*
 *  CALIB NASHYD         0102  1  5.0    0.88    0.01  3.83   9.04 0.19   0.000
    [CN=68.0         ]
    [ N = 1.5:Tp 0.62]
*
    ADD [  0100+  0102]  0137  3  5.0   15.55    0.07  4.67   9.07  n/a   0.000
*
    ADD [  0010+  0137]  0130  3  5.0   19.73    0.19  2.75  11.96  n/a   0.000
*
    CHANNEL[ 2:  0130]   0094  1  5.0   19.73    0.09  3.33  11.96  n/a   0.000
*
    READ STORM                 15.0
    [ Ptot= 47.81 mm ]
    fname : C:\Users\pchiocchio\AppData\Local\Temp\3c91563b-7bef-4116-8770-530a22aa1648\8473c2e0-bfe2-4798-bce2-
    remark: 5 Year 6 Hour AES (Bloor, TRCA)
*
 *  CALIB NASHYD         0037  1  5.0    9.00    0.01  8.42  11.66 0.24   0.000
    [CN=75.0         ]
    [ N = 1.5:Tp 5.09]
*
    ADD [  0037+  0094]  0053  3  5.0   28.73    0.10  3.83  11.87  n/a   0.000
*
    READ STORM                 15.0
    [ Ptot= 47.81 mm ]
    fname : C:\Users\pchiocchio\AppData\Local\Temp\3c91563b-7bef-4116-8770-530a22aa1648\8473c2e0-bfe2-4798-bce2-
    remark: 5 Year 6 Hour AES (Bloor, TRCA)
*
 *  CALIB NASHYD         0013  1  5.0    1.42    0.01  4.33  11.64 0.24   0.000
    [CN=75.0         ]
    [ N = 1.5:Tp 1.01]
*
    READ STORM                 15.0
    [ Ptot= 47.81 mm ]
    fname : C:\Users\pchiocchio\AppData\Local\Temp\3c91563b-7bef-4116-8770-530a22aa1648\8473c2e0-bfe2-4798-bce2-
    remark: 5 Year 6 Hour AES (Bloor, TRCA)
*
 *  CALIB NASHYD         0014  1  5.0    0.93    0.01  4.58  11.64 0.24   0.000
    [CN=75.0         ]
    [ N = 1.5:Tp 1.18]
*
    READ STORM                 15.0
    [ Ptot= 47.81 mm ]
    fname : C:\Users\pchiocchio\AppData\Local\Temp\3c91563b-7bef-4116-8770-530a22aa1648\8473c2e0-bfe2-4798-bce2-
    remark: 5 Year 6 Hour AES (Bloor, TRCA)
*
 *  CALIB STANDHYD       0109  1  5.0   50.15    4.57  2.75  39.36 0.82   0.000
    [I%=68.0:S%= 2.00]
*
 ** Reservoir
    OUTFLOW:             0110  1  5.0   50.15    0.44  4.42  35.44  n/a   0.000
*
    READ STORM                 15.0
    [ Ptot= 47.81 mm ]
    fname : C:\Users\pchiocchio\AppData\Local\Temp\3c91563b-7bef-4116-8770-530a22aa1648\8473c2e0-bfe2-4798-bce2-
    remark: 5 Year 6 Hour AES (Bloor, TRCA)
*
 *  CALIB STANDHYD       0115  1  5.0    0.23    0.02  2.75  35.13 0.73   0.000
    [I%=50.0:S%= 2.00]
*
    READ STORM                 15.0
    [ Ptot= 47.81 mm ]
    fname : C:\Users\pchiocchio\AppData\Local\Temp\3c91563b-7bef-4116-8770-530a22aa1648\8473c2e0-bfe2-4798-bce2-
    remark: 5 Year 6 Hour AES (Bloor, TRCA)
*
 *  CALIB STANDHYD       0116  1  5.0    0.29    0.03  2.75  35.14 0.74   0.000
    [I%=50.0:S%= 2.00]
*
    READ STORM                 15.0
    [ Ptot= 47.81 mm ]
    fname : C:\Users\pchiocchio\AppData\Local\Temp\3c91563b-7bef-4116-8770-530a22aa1648\8473c2e0-bfe2-4798-bce2-
    remark: 5 Year 6 Hour AES (Bloor, TRCA)
*
 *  CALIB STANDHYD       0134  1  5.0    0.54    0.05  2.75  38.42 0.80   0.000
    [I%=64.0:S%= 2.00]
*
    READ STORM                 15.0
    [ Ptot= 47.81 mm ]
    fname : C:\Users\pchiocchio\AppData\Local\Temp\3c91563b-7bef-4116-8770-530a22aa1648\8473c2e0-bfe2-4798-bce2-
    remark: 5 Year 6 Hour AES (Bloor, TRCA)
*
 *  CALIB STANDHYD       0135  1  5.0    0.26    0.03  2.75  38.40 0.80   0.000
    [I%=64.0:S%= 2.00]
*
    ADD [  0110+  0115]  0012  3  5.0   50.38    0.44  4.42  35.44  n/a   0.000
*
```

```
    ADD [  0012+  0116]  0012  1  5.0   50.67    0.44  4.42  35.44  n/a   0.000
*
    ADD [  0012+  0013]  0012  3  5.0   52.09    0.45  4.42  34.79  n/a   0.000
*
    ADD [  0012+  0134]  0012  1  5.0   52.63    0.45  4.25  34.83  n/a   0.000
*
    ADD [  0012+  0135]  0012  3  5.0   52.89    0.46  4.25  34.84  n/a   0.000
*
    ADD [  0012+  0014]  0012  1  5.0   53.82    0.46  4.25  34.44  n/a   0.000
*
    CHANNEL[ 2:  0012]   0093  1  5.0   53.82    0.46  4.58  34.42  n/a   0.000
*
    READ STORM                 15.0
    [ Ptot= 47.81 mm ]
    fname : C:\Users\pchiocchio\AppData\Local\Temp\3c91563b-7bef-4116-8770-530a22aa1648\8473c2e0-bfe2-4798-bce2-
    remark: 5 Year 6 Hour AES (Bloor, TRCA)
*
 *  CALIB NASHYD         0039  1  5.0   13.25    0.03  7.42  11.67 0.24   0.000
    [CN=75.0         ]
    [ N = 1.5:Tp 4.05]
*
    ADD [  0039+  0093]  0051  3  5.0   67.07    0.48  4.58  29.93  n/a   0.000
*
    READ STORM                 15.0
    [ Ptot= 47.81 mm ]
    fname : C:\Users\pchiocchio\AppData\Local\Temp\3c91563b-7bef-4116-8770-530a22aa1648\8473c2e0-bfe2-4798-bce2-
    remark: 5 Year 6 Hour AES (Bloor, TRCA)
*
 *  CALIB NASHYD         0040  1  5.0    7.26    0.02  7.08  11.67 0.24   0.000
    [CN=75.0         ]
    [ N = 1.5:Tp 3.69]
*
    READ STORM                 15.0
    [ Ptot= 47.81 mm ]
    fname : C:\Users\pchiocchio\AppData\Local\Temp\3c91563b-7bef-4116-8770-530a22aa1648\8473c2e0-bfe2-4798-bce2-
    remark: 5 Year 6 Hour AES (Bloor, TRCA)
*
 *  CALIB NASHYD         0136  1  5.0    4.10    0.03  3.83   9.05 0.19   0.000
    [CN=68.0         ]
    [ N = 1.5:Tp 0.62]
*
    CHANNEL[ 2:  0136]   0101  1  5.0    4.10    0.03  4.33   9.05  n/a   0.000
*
    ADD [  0101+  0040]  0090  3  5.0   11.36    0.04  4.50  10.72  n/a   0.000
*
    ADD [  0090+  0051]  0090  1  5.0   78.43    0.52  4.58  27.15  n/a   0.000
*
    ADD [  0090+  0052]  0090  3  5.0   91.96    0.57  4.33  25.68  n/a   0.000
*
    ADD [  0090+  0053]  0090  1  5.0  120.69    0.68  4.33  22.39  n/a   0.000
*
    CHANNEL[ 2:  0090]   0095  1  5.0  120.69    0.67  4.42  22.39  n/a   0.000
*
    READ STORM                 15.0
    [ Ptot= 47.81 mm ]
    fname : C:\Users\pchiocchio\AppData\Local\Temp\3c91563b-7bef-4116-8770-530a22aa1648\8473c2e0-bfe2-4798-bce2-
    remark: 5 Year 6 Hour AES (Bloor, TRCA)
*
 *  CALIB NASHYD         0041  1  5.0   12.70    0.03  6.75  11.67 0.24   0.000
    [CN=75.0         ]
    [ N = 1.5:Tp 3.25]
*
    ADD [  0041+  0095]  0050  3  5.0  133.39    0.70  4.50  21.37  n/a   0.000
*
    READ STORM                 15.0
    [ Ptot= 47.81 mm ]
    fname : C:\Users\pchiocchio\AppData\Local\Temp\3c91563b-7bef-4116-8770-530a22aa1648\8473c2e0-bfe2-4798-bce2-
    remark: 5 Year 6 Hour AES (Bloor, TRCA)
*
 *  CALIB NASHYD         0047  1  5.0   71.95    0.11  8.42  12.10 0.25   0.000
    [CN=76.0         ]
    [ N = 1.5:Tp 5.10]
*
    ADD [  0047+  0050]  0054  3  5.0  205.34    0.78  4.75  18.12  n/a   0.000
*
    ADD [  0054+  0087]  0054  1  5.0  524.38    1.81  5.08  19.15  n/a   0.000
*
    CHANNEL[ 2:  0054]   0088  1  5.0  524.38    1.81  5.17  19.14  n/a   0.000
*
    READ STORM                 15.0
    [ Ptot= 47.81 mm ]
    fname : C:\Users\pchiocchio\AppData\Local\Temp\3c91563b-7bef-4116-8770-530a22aa1648\8473c2e0-bfe2-4798-bce2-
    remark: 5 Year 6 Hour AES (Bloor, TRCA)
*
 *  CALIB NASHYD         0048  1  5.0   34.24    0.12  5.33  10.46 0.22   0.000
    [CN=72.0         ]
    [ N = 1.5:Tp 1.82]
*
    ADD [  0048+  0088]  0049  3  5.0  558.62    1.93  5.17  18.61  n/a   0.000
*
    READ STORM                 15.0
    [ Ptot= 47.81 mm ]
    fname : C:\Users\pchiocchio\AppData\Local\Temp\3c91563b-7bef-4116-8770-530a22aa1648\8473c2e0-bfe2-4798-bce2-
    remark: 5 Year 6 Hour AES (Bloor, TRCA)
*
```

```
 *  CALIB STANDHYD       0118  1  5.0   13.25    1.49  2.75  43.55 0.91   0.000
    [I%=86.0:S%= 2.00]
*
    READ STORM                 15.0
    [ Ptot= 47.81 mm ]
    fname : C:\Users\pchiocchio\AppData\Local\Temp\3c91563b-7bef-4116-8770-530a22aa1648\8473c2e0-bfe2-4798-bce2-
    remark: 5 Year 6 Hour AES (Bloor, TRCA)
*
 *  CALIB STANDHYD       0123  1  5.0    8.30    0.95  2.75  44.25 0.93   0.000
    [I%=89.0:S%= 2.00]
*
    READ STORM                 15.0
    [ Ptot= 47.81 mm ]
    fname : C:\Users\pchiocchio\AppData\Local\Temp\3c91563b-7bef-4116-8770-530a22aa1648\8473c2e0-bfe2-4798-bce2-
    remark: 5 Year 6 Hour AES (Bloor, TRCA)
*
 *  CALIB STANDHYD       0125  1  5.0   13.70    1.57  2.75  44.25 0.93   0.000
    [I%=89.0:S%= 2.00]
*
```

```
==========================================================================================

       V    V   I    SSSSS  U   U    A    L              (v 6.2.2001)
       V    V   I    SS     U   U   A A   L
        V  V    I     SS    U   U  AAAAA  L
        V  V    I      SS   U   U  A   A  L
         VV     I    SSSSS  UUUUU  A   A  LLLLL

        OOO   TTTTT  TTTTT  H   H  Y   Y  M   M   OOO    TM
       O   O    T      T    H   H   Y Y   MM MM  O   O
       O   O    T      T    H   H    Y    M   M  O   O
        OOO     T      T    H   H    Y    M   M   OOO
Developed and Distributed by Smart City Water Inc
Copyright 2007 - 2020 Smart City Water Inc
All rights reserved.


                  *****  S U M M A R Y   O U T P U T  *****


  Input   filename: C:\Program Files (x86)\Visual OTTHYMO 6.2\VO2\voin.dat
  Output  filename: C:\Users\pchiocchio\AppData\Local\Civica\VH5\d59fad6f-510d-48b8-a35a-1bee91f156cc\19110bf5-139c-4337-928d-
01148ffef6b5\s
  Summary filename: C:\Users\pchiocchio\AppData\Local\Civica\VH5\d59fad6f-510d-48b8-a35a-1bee91f156cc\19110bf5-139c-4337-928d-
01148ffef6b5\s


DATE: 02/02/2021                          TIME: 05:18:30

USER:


COMMENTS: ____________________________________________________________


  ************************************************
  ** SIMULATION : 5 - Year (12hr AES)           **
  ************************************************

  W/E COMMAND             HYD ID   DT    AREA  ' Qpeak Tpeak   R.V. R.C.   Qbase
                                  min     ha   '  cms   hrs     mm          cms

      START @  0.00 hrs
      --------------------
    READ STORM                 15.0
    [ Ptot= 54.38 mm ]
    fname : C:\Users\pchiocchio\AppData\Local\Temp\3c91563b-7bef-4116-8770-530a22aa1648\592e14ab-eed9-4d91-8e8e-
    remark: 5 Year 12 Hour AES (Bloor, TRCA)
*
 ** CALIB NASHYD         0004  1  5.0   40.84    0.08 12.25  15.24 0.28   0.000
    [CN=75.0         ]
    [ N = 1.5:Tp 5.06]
*
    CHANNEL[ 2:  0004]   0066  1  5.0   40.84    0.08 13.50  15.26  n/a   0.000
*
    READ STORM                 15.0
    [ Ptot= 54.38 mm ]
    fname : C:\Users\pchiocchio\AppData\Local\Temp\3c91563b-7bef-4116-8770-530a22aa1648\592e14ab-eed9-4d91-8e8e-
    remark: 5 Year 12 Hour AES (Bloor, TRCA)
*
 ** CALIB NASHYD         0005  1  5.0   34.73    0.03 17.00  14.26 0.26   0.000
    [CN=75.0         ]
    [ N = 1.5:Tp10.71]
*
    ADD [  0005+  0066]  0003  3  5.0   75.57    0.11 13.92  15.25  n/a   0.000
*
    PIPE   [ 2:  0003]   0120  1  5.0   75.57    0.11 13.75  15.25  n/a   0.000
*
    CHANNEL[ 2:  0120]   0080  1  5.0   75.57    0.11 14.75  15.25  n/a   0.000
*
    READ STORM                 15.0
    [ Ptot= 54.38 mm ]
    fname : C:\Users\pchiocchio\AppData\Local\Temp\3c91563b-7bef-4116-8770-530a22aa1648\592e14ab-eed9-4d91-8e8e-
    remark: 5 Year 12 Hour AES (Bloor, TRCA)
*
 ** CALIB STANDHYD       0104  1  5.0   83.92    5.07  5.25  47.93 0.88   0.000
    [I%=78.0:S%= 2.00]
*
 ** Reservoir
    OUTFLOW:             0105  1  5.0   83.92    0.76  7.50  44.22  n/a   0.000
*
    DUHYD                0128  1  5.0   83.92    0.76  7.50  44.22  n/a   0.000
       MAJOR SYSTEM:     0128  2  5.0    9.19    0.28  7.50  44.22  n/a   0.000
       MINOR SYSTEM:     0128  3  5.0   74.73    0.49  5.58  44.22  n/a   0.000
*
    READ STORM                 15.0
    [ Ptot= 54.38 mm ]
    fname : C:\Users\pchiocchio\AppData\Local\Temp\3c91563b-7bef-4116-8770-530a22aa1648\592e14ab-eed9-4d91-8e8e-
    remark: 5 Year 12 Hour AES (Bloor, TRCA)
*
 ** CALIB STANDHYD       0127  1  5.0    3.04    0.15  5.25  37.03 0.68   0.000
    [I%=34.0:S%= 2.00]
*
    ADD [  0127+  0128]  0122  3  5.0   12.23    0.30  7.25  42.44  n/a   0.000
```

```
*
    ADD [  0122+  0080]  0122  1  5.0   87.80    0.33  7.50  19.03  n/a   0.000
*
    CHANNEL[ 2:  0122]   0081  1  5.0   87.80    0.33  7.75  19.03  n/a   0.000
*
    READ STORM                 15.0
    [ Ptot= 54.38 mm ]
    fname : C:\Users\pchiocchio\AppData\Local\Temp\3c91563b-7bef-4116-8770-530a22aa1648\592e14ab-eed9-4d91-8e8e-
    remark: 5 Year 12 Hour AES (Bloor, TRCA)
*
 ** CALIB STANDHYD       0117  1  5.0    7.94    0.54  5.25  51.65 0.95   0.000
    [I%=93.0:S%= 2.00]
*
    ADD [  0117+  0128]  0035  3  5.0   82.67    0.75  5.25  44.94  n/a   0.000
*
    ADD [  0035+  0081]  0035  1  5.0  170.47    0.89  7.25  31.60  n/a   0.000
*
    CHANNEL[ 2:  0035]   0082  1  5.0  170.47    0.87  7.33  31.58  n/a   0.000
*
    READ STORM                 15.0
    [ Ptot= 54.38 mm ]
    fname : C:\Users\pchiocchio\AppData\Local\Temp\3c91563b-7bef-4116-8770-530a22aa1648\592e14ab-eed9-4d91-8e8e-
    remark: 5 Year 12 Hour AES (Bloor, TRCA)
*
 ** CALIB NASHYD         0044  1  5.0   24.38    0.02 17.00  14.25 0.26   0.000
    [CN=75.0         ]
    [ N = 1.5:Tp10.73]
*
    ADD [  0044+  0082]  0056  3  5.0  194.85    0.89  7.42  29.53  n/a   0.000
*
    CHANNEL[ 2:  0056]   0083  1  5.0  194.85    0.88  8.00  29.52  n/a   0.000
*
    READ STORM                 15.0
    [ Ptot= 54.38 mm ]
    fname : C:\Users\pchiocchio\AppData\Local\Temp\3c91563b-7bef-4116-8770-530a22aa1648\592e14ab-eed9-4d91-8e8e-
    remark: 5 Year 12 Hour AES (Bloor, TRCA)
*
 ** CALIB NASHYD         0043  1  5.0   10.09    0.04  8.42  15.80 0.29   0.000
    [CN=76.0         ]
    [ N = 1.5:Tp 2.02]
*
    READ STORM                 15.0
    [ Ptot= 54.38 mm ]
    fname : C:\Users\pchiocchio\AppData\Local\Temp\3c91563b-7bef-4116-8770-530a22aa1648\592e14ab-eed9-4d91-8e8e-
    remark: 5 Year 12 Hour AES (Bloor, TRCA)
*
 ** CALIB NASHYD         0045  1  5.0    5.34    0.03  7.58  15.79 0.29   0.000
    [CN=76.0         ]
    [ N = 1.5:Tp 1.39]
*
    ADD [  0043+  0045]  0086  3  5.0   15.43    0.07  8.25  15.79  n/a   0.000
*
    ADD [  0086+  0083]  0086  1  5.0  210.28    0.96  8.08  28.51  n/a   0.000
*
    CHANNEL[ 2:  0086]   0085  1  5.0  210.28    0.95  8.33  28.50  n/a   0.000
*
    READ STORM                 15.0
    [ Ptot= 54.38 mm ]
    fname : C:\Users\pchiocchio\AppData\Local\Temp\3c91563b-7bef-4116-8770-530a22aa1648\592e14ab-eed9-4d91-8e8e-
    remark: 5 Year 12 Hour AES (Bloor, TRCA)
*
 ** CALIB NASHYD         0042  1  5.0   33.34    0.11  9.58  15.80 0.29   0.000
    [CN=76.0         ]
    [ N = 1.5:Tp 3.02]
*
    READ STORM                 15.0
    [ Ptot= 54.38 mm ]
    fname : C:\Users\pchiocchio\AppData\Local\Temp\3c91563b-7bef-4116-8770-530a22aa1648\592e14ab-eed9-4d91-8e8e-
    remark: 5 Year 12 Hour AES (Bloor, TRCA)
*
 ** CALIB NASHYD         0046  1  5.0   75.42    0.14 12.58  15.75 0.29   0.000
    [CN=76.0         ]
    [ N = 1.5:Tp 5.71]
*
    ADD [  0042+  0046]  0055  3  5.0  108.76    0.23 10.92  15.80  n/a   0.000
*
    ADD [  0055+  0085]  0055  1  5.0  319.04    1.17  8.67  24.17  n/a   0.000
*
    CHANNEL[ 2:  0055]   0087  1  5.0  319.04    1.17  8.83  24.17  n/a   0.000
*
    READ STORM                 15.0
    [ Ptot= 54.38 mm ]
    fname : C:\Users\pchiocchio\AppData\Local\Temp\3c91563b-7bef-4116-8770-530a22aa1648\592e14ab-eed9-4d91-8e8e-
    remark: 5 Year 12 Hour AES (Bloor, TRCA)
*
 ** CALIB NASHYD         0006  1  5.0    2.42    0.01  7.83  15.24 0.28   0.000
    [CN=75.0         ]
    [ N = 1.5:Tp 1.50]
*
    READ STORM                 15.0
    [ Ptot= 54.38 mm ]
    fname : C:\Users\pchiocchio\AppData\Local\Temp\3c91563b-7bef-4116-8770-530a22aa1648\592e14ab-eed9-4d91-8e8e-
    remark: 5 Year 12 Hour AES (Bloor, TRCA)
*
 *  CALIB STANDHYD       0113  1  5.0    0.62    0.03  5.25  40.98 0.75   0.000
```

```
    [I%=50.0:S%= 2.00]
*
    ADD [  0113+  0006]  0131  3  5.0    3.04    0.04  5.25  20.49  n/a   0.000
*
    CHANNEL[ 2:  0131]   0091  1  5.0    3.04    0.03  5.33  20.49  n/a   0.000
*
    READ STORM                 15.0
    [ Ptot= 54.38 mm ]
    fname : C:\Users\pchiocchio\AppData\Local\Temp\3c91563b-7bef-4116-8770-530a22aa1648\592e14ab-eed9-4d91-8e8e-
    remark: 5 Year 12 Hour AES (Bloor, TRCA)
*
 *  CALIB NASHYD         0008  1  5.0    0.95    0.00  7.92  15.23 0.28   0.000
    [CN=75.0         ]
    [ N = 1.5:Tp 1.55]
*
    READ STORM                 15.0
    [ Ptot= 54.38 mm ]
    fname : C:\Users\pchiocchio\AppData\Local\Temp\3c91563b-7bef-4116-8770-530a22aa1648\592e14ab-eed9-4d91-8e8e-
    remark: 5 Year 12 Hour AES (Bloor, TRCA)
*
 *  CALIB STANDHYD       0111  1  5.0    0.55    0.03  5.25  40.98 0.75   0.000
    [I%=50.0:S%= 2.00]
*
    READ STORM                 15.0
    [ Ptot= 54.38 mm ]
    fname : C:\Users\pchiocchio\AppData\Local\Temp\3c91563b-7bef-4116-8770-530a22aa1648\592e14ab-eed9-4d91-8e8e-
    remark: 5 Year 12 Hour AES (Bloor, TRCA)
*
 *  CALIB STANDHYD       0133  1  5.0    1.76    0.10  5.25  44.46 0.82   0.000
    [I%=64.0:S%= 2.00]
*
    ADD [  0111+  0133]  0011  3  5.0    2.31    0.13  5.25  43.63  n/a   0.000
*
    ADD [  0011+  0008]  0011  1  5.0    3.26    0.14  5.25  35.39  n/a   0.000
*
    ADD [  0011+  0091]  0011  3  5.0    6.30    0.17  5.25  28.20  n/a   0.000
*
    CHANNEL[ 2:  0011]   0092  1  5.0    6.30    0.16  5.25  28.20  n/a   0.000
*
    READ STORM                 15.0
    [ Ptot= 54.38 mm ]
    fname : C:\Users\pchiocchio\AppData\Local\Temp\3c91563b-7bef-4116-8770-530a22aa1648\592e14ab-eed9-4d91-8e8e-
    remark: 5 Year 12 Hour AES (Bloor, TRCA)
*
 *  CALIB NASHYD         0038  1  5.0    7.23    0.02 10.83  15.25 0.28   0.000
    [CN=75.0         ]
    [ N = 1.5:Tp 4.06]
*
    ADD [  0038+  0092]  0052  3  5.0   13.53    0.16  5.25  21.28  n/a   0.000
*
    READ STORM                 15.0
    [ Ptot= 54.38 mm ]
    fname : C:\Users\pchiocchio\AppData\Local\Temp\3c91563b-7bef-4116-8770-530a22aa1648\592e14ab-eed9-4d91-8e8e-
    remark: 5 Year 12 Hour AES (Bloor, TRCA)
*
 *  CALIB NASHYD         0007  1  5.0    0.22    0.00  5.92  15.15 0.28   0.000
    [CN=75.0         ]
    [ N = 1.5:Tp 0.46]
*
    CHANNEL[ 2:  0007]   0089  1  5.0    0.22    0.00  6.58  15.12  n/a   0.000
*
    READ STORM                 15.0
    [ Ptot= 54.38 mm ]
    fname : C:\Users\pchiocchio\AppData\Local\Temp\3c91563b-7bef-4116-8770-530a22aa1648\592e14ab-eed9-4d91-8e8e-
    remark: 5 Year 12 Hour AES (Bloor, TRCA)
*
 *  CALIB NASHYD         0009  1  5.0    2.18    0.01  9.33  15.26 0.28   0.000
    [CN=75.0         ]
    [ N = 1.5:Tp 2.82]
*
    READ STORM                 15.0
    [ Ptot= 54.38 mm ]
    fname : C:\Users\pchiocchio\AppData\Local\Temp\3c91563b-7bef-4116-8770-530a22aa1648\592e14ab-eed9-4d91-8e8e-
    remark: 5 Year 12 Hour AES (Bloor, TRCA)
*
 *  CALIB STANDHYD       0114  1  5.0    0.46    0.03  5.25  40.98 0.75   0.000
    [I%=50.0:S%= 2.00]
*
    READ STORM                 15.0
    [ Ptot= 54.38 mm ]
    fname : C:\Users\pchiocchio\AppData\Local\Temp\3c91563b-7bef-4116-8770-530a22aa1648\592e14ab-eed9-4d91-8e8e-
    remark: 5 Year 12 Hour AES (Bloor, TRCA)
*
 *  CALIB STANDHYD       0132  1  5.0    1.32    0.08  5.25  44.46 0.82   0.000
    [I%=64.0:S%= 2.00]
*
    ADD [  0114+  0132]  0010  3  5.0    1.79    0.10  5.25  43.55  n/a   0.000
*
    ADD [  0010+  0089]  0010  1  5.0    2.01    0.10  5.25  40.43  n/a   0.000
*
    ADD [  0010+  0009]  0010  3  5.0    4.18    0.11  5.25  27.32  n/a   0.000
*
    READ STORM                 15.0
    [ Ptot= 54.38 mm ]
    fname : C:\Users\pchiocchio\AppData\Local\Temp\3c91563b-7bef-4116-8770-530a22aa1648\592e14ab-eed9-4d91-8e8e-
```

```
    remark: 5 Year 12 Hour AES (Bloor, TRCA)
*
 *  CALIB NASHYD         0100  1  5.0   14.67    0.07  7.50  12.00 0.22   0.000
    [CN=68.0         ]
    [ N = 1.5:Tp 1.29]
*
    READ STORM                 15.0
    [ Ptot= 54.38 mm ]
    fname : C:\Users\pchiocchio\AppData\Local\Temp\3c91563b-7bef-4116-8770-530a22aa1648\592e14ab-eed9-4d91-8e8e-
    remark: 5 Year 12 Hour AES (Bloor, TRCA)
*
 *  CALIB NASHYD         0102  1  5.0    0.88    0.01  6.25  11.96 0.22   0.000
    [CN=68.0         ]
    [ N = 1.5:Tp 0.62]
*
    ADD [  0100+  0102]  0137  3  5.0   15.55    0.07  7.33  12.00  n/a   0.000
*
    ADD [  0010+  0137]  0130  3  5.0   19.73    0.14  5.25  15.25  n/a   0.000
*
    CHANNEL[ 2:  0130]   0094  1  5.0   19.73    0.10  7.33  15.25  n/a   0.000
*
    READ STORM                 15.0
    [ Ptot= 54.38 mm ]
    fname : C:\Users\pchiocchio\AppData\Local\Temp\3c91563b-7bef-4116-8770-530a22aa1648\592e14ab-eed9-4d91-8e8e-
    remark: 5 Year 12 Hour AES (Bloor, TRCA)
*
 *  CALIB NASHYD         0037  1  5.0    9.00    0.02 12.25  15.23 0.28   0.000
    [CN=75.0         ]
    [ N = 1.5:Tp 5.09]
*
    ADD [  0037+  0094]  0053  3  5.0   28.73    0.11  7.42  15.25  n/a   0.000
*
    READ STORM                 15.0
    [ Ptot= 54.38 mm ]
    fname : C:\Users\pchiocchio\AppData\Local\Temp\3c91563b-7bef-4116-8770-530a22aa1648\592e14ab-eed9-4d91-8e8e-
    remark: 5 Year 12 Hour AES (Bloor, TRCA)
*
 *  CALIB NASHYD         0013  1  5.0    1.42    0.01  7.17  15.23 0.28   0.000
    [CN=75.0         ]
    [ N = 1.5:Tp 1.01]
*
    READ STORM                 15.0
    [ Ptot= 54.38 mm ]
    fname : C:\Users\pchiocchio\AppData\Local\Temp\3c91563b-7bef-4116-8770-530a22aa1648\592e14ab-eed9-4d91-8e8e-
    remark: 5 Year 12 Hour AES (Bloor, TRCA)
*
 *  CALIB NASHYD         0014  1  5.0    0.93    0.01  7.33  15.23 0.28   0.000
    [CN=75.0         ]
    [ N = 1.5:Tp 1.18]
*
    READ STORM                 15.0
    [ Ptot= 54.38 mm ]
    fname : C:\Users\pchiocchio\AppData\Local\Temp\3c91563b-7bef-4116-8770-530a22aa1648\592e14ab-eed9-4d91-8e8e-
    remark: 5 Year 12 Hour AES (Bloor, TRCA)
*
 *  CALIB STANDHYD       0109  1  5.0   50.15    2.88  5.25  45.46 0.84   0.000
    [I%=68.0:S%= 2.00]
*
 ** Reservoir
    OUTFLOW:             0110  1  5.0   50.15    0.46  7.42  41.35  n/a   0.000
*
    READ STORM                 15.0
    [ Ptot= 54.38 mm ]
    fname : C:\Users\pchiocchio\AppData\Local\Temp\3c91563b-7bef-4116-8770-530a22aa1648\592e14ab-eed9-4d91-8e8e-
    remark: 5 Year 12 Hour AES (Bloor, TRCA)
*
 *  CALIB STANDHYD       0115  1  5.0    0.23    0.01  5.25  40.95 0.75   0.000
    [I%=50.0:S%= 2.00]
*
    READ STORM                 15.0
    [ Ptot= 54.38 mm ]
    fname : C:\Users\pchiocchio\AppData\Local\Temp\3c91563b-7bef-4116-8770-530a22aa1648\592e14ab-eed9-4d91-8e8e-
    remark: 5 Year 12 Hour AES (Bloor, TRCA)
*
 *  CALIB STANDHYD       0116  1  5.0    0.29    0.02  5.25  40.96 0.75   0.000
    [I%=50.0:S%= 2.00]
*
    READ STORM                 15.0
    [ Ptot= 54.38 mm ]
    fname : C:\Users\pchiocchio\AppData\Local\Temp\3c91563b-7bef-4116-8770-530a22aa1648\592e14ab-eed9-4d91-8e8e-
    remark: 5 Year 12 Hour AES (Bloor, TRCA)
*
 *  CALIB STANDHYD       0134  1  5.0    0.54    0.03  5.25  44.44 0.82   0.000
    [I%=64.0:S%= 2.00]
*
    READ STORM                 15.0
    [ Ptot= 54.38 mm ]
    fname : C:\Users\pchiocchio\AppData\Local\Temp\3c91563b-7bef-4116-8770-530a22aa1648\592e14ab-eed9-4d91-8e8e-
    remark: 5 Year 12 Hour AES (Bloor, TRCA)
*
 *  CALIB STANDHYD       0135  1  5.0    0.26    0.02  5.25  44.43 0.82   0.000
    [I%=64.0:S%= 2.00]
*
    ADD [  0110+  0115]  0012  3  5.0   50.38    0.47  7.42  41.35  n/a   0.000
*
```

```
    ADD [  0012+  0116]  0012  1  5.0   50.67    0.47  7.25  41.34  n/a   0.000
*
    ADD [  0012+  0013]  0012  3  5.0   52.09    0.48  7.25  40.63  n/a   0.000
*
    ADD [  0012+  0134]  0012  1  5.0   52.63    0.48  7.25  40.67  n/a   0.000
*
    ADD [  0012+  0135]  0012  3  5.0   52.89    0.49  7.25  40.69  n/a   0.000
*
    ADD [  0012+  0014]  0012  1  5.0   53.82    0.49  7.25  40.25  n/a   0.000
*
    CHANNEL[ 2:  0012]   0093  1  5.0   53.82    0.49  7.33  40.23  n/a   0.000
*
    READ STORM                 15.0
    [ Ptot= 54.38 mm ]
    fname : C:\Users\pchiocchio\AppData\Local\Temp\3c91563b-7bef-4116-8770-530a22aa1648\592e14ab-eed9-4d91-8e8e-
    remark: 5 Year 12 Hour AES (Bloor, TRCA)
*
 *  CALIB NASHYD         0039  1  5.0   13.25    0.03 10.83  15.25 0.28   0.000
    [CN=75.0         ]
    [ N = 1.5:Tp 4.05]
*
    ADD [  0039+  0093]  0051  3  5.0   67.07    0.51  7.50  35.30  n/a   0.000
*
    READ STORM                 15.0
    [ Ptot= 54.38 mm ]
    fname : C:\Users\pchiocchio\AppData\Local\Temp\3c91563b-7bef-4116-8770-530a22aa1648\592e14ab-eed9-4d91-8e8e-
    remark: 5 Year 12 Hour AES (Bloor, TRCA)
*
 *  CALIB NASHYD         0040  1  5.0    7.26    0.02 10.33  15.26 0.28   0.000
    [CN=75.0         ]
    [ N = 1.5:Tp 3.69]
*
    READ STORM                 15.0
    [ Ptot= 54.38 mm ]
    fname : C:\Users\pchiocchio\AppData\Local\Temp\3c91563b-7bef-4116-8770-530a22aa1648\592e14ab-eed9-4d91-8e8e-
    remark: 5 Year 12 Hour AES (Bloor, TRCA)
*
 *  CALIB NASHYD         0136  1  5.0    4.10    0.03  6.25  11.97 0.22   0.000
    [CN=68.0         ]
    [ N = 1.5:Tp 0.62]
*
    CHANNEL[ 2:  0136]   0101  1  5.0    4.10    0.03  6.67  11.97  n/a   0.000
*
    ADD [  0101+  0040]  0090  3  5.0   11.36    0.04  7.25  14.07  n/a   0.000
*
    ADD [  0090+  0051]  0090  1  5.0   78.43    0.56  7.42  32.22  n/a   0.000
*
    ADD [  0090+  0052]  0090  3  5.0   91.96    0.62  7.33  30.61  n/a   0.000
*
    ADD [  0090+  0053]  0090  1  5.0  120.69    0.72  7.33  26.96  n/a   0.000
*
    CHANNEL[ 2:  0090]   0095  1  5.0  120.69    0.72  7.42  26.95  n/a   0.000
*
    READ STORM                 15.0
    [ Ptot= 54.38 mm ]
    fname : C:\Users\pchiocchio\AppData\Local\Temp\3c91563b-7bef-4116-8770-530a22aa1648\592e14ab-eed9-4d91-8e8e-
    remark: 5 Year 12 Hour AES (Bloor, TRCA)
*
 *  CALIB NASHYD         0041  1  5.0   12.70    0.04  9.83  15.26 0.28   0.000
    [CN=75.0         ]
    [ N = 1.5:Tp 3.25]
*
    ADD [  0041+  0095]  0050  3  5.0  133.39    0.75  7.42  25.84  n/a   0.000
*
    READ STORM                 15.0
    [ Ptot= 54.38 mm ]
    fname : C:\Users\pchiocchio\AppData\Local\Temp\3c91563b-7bef-4116-8770-530a22aa1648\592e14ab-eed9-4d91-8e8e-
    remark: 5 Year 12 Hour AES (Bloor, TRCA)
*
 *  CALIB NASHYD         0047  1  5.0   71.95    0.14 12.25  15.78 0.29   0.000
    [CN=76.0         ]
    [ N = 1.5:Tp 5.10]
*
    ADD [  0047+  0050]  0054  3  5.0  205.34    0.86  7.83  22.32  n/a   0.000
*
    ADD [  0054+  0087]  0054  1  5.0  524.38    2.01  8.42  23.45  n/a   0.000
*
    CHANNEL[ 2:  0054]   0088  1  5.0  524.38    2.01  8.58  23.44  n/a   0.000
*
    READ STORM                 15.0
    [ Ptot= 54.38 mm ]
    fname : C:\Users\pchiocchio\AppData\Local\Temp\3c91563b-7bef-4116-8770-530a22aa1648\592e14ab-eed9-4d91-8e8e-
    remark: 5 Year 12 Hour AES (Bloor, TRCA)
*
 *  CALIB NASHYD         0048  1  5.0   34.24    0.14  8.25  13.75 0.25   0.000
    [CN=72.0         ]
    [ N = 1.5:Tp 1.82]
*
    ADD [  0048+  0088]  0049  3  5.0  558.62    2.15  8.50  22.85  n/a   0.000
*
    READ STORM                 15.0
    [ Ptot= 54.38 mm ]
    fname : C:\Users\pchiocchio\AppData\Local\Temp\3c91563b-7bef-4116-8770-530a22aa1648\592e14ab-eed9-4d91-8e8e-
    remark: 5 Year 12 Hour AES (Bloor, TRCA)
*
```

```
 *  CALIB STANDHYD       0118  1  5.0   13.25    0.86  5.25  49.91 0.92   0.000
    [I%=86.0:S%= 2.00]
*
    READ STORM                 15.0
    [ Ptot= 54.38 mm ]
    fname : C:\Users\pchiocchio\AppData\Local\Temp\3c91563b-7bef-4116-8770-530a22aa1648\592e14ab-eed9-4d91-8e8e-
    remark: 5 Year 12 Hour AES (Bloor, TRCA)
*
 *  CALIB STANDHYD       0123  1  5.0    8.30    0.55  5.25  50.65 0.93   0.000
    [I%=89.0:S%= 2.00]
*
    READ STORM                 15.0
    [ Ptot= 54.38 mm ]
    fname : C:\Users\pchiocchio\AppData\Local\Temp\3c91563b-7bef-4116-8770-530a22aa1648\592e14ab-eed9-4d91-8e8e-
    remark: 5 Year 12 Hour AES (Bloor, TRCA)
*
 *  CALIB STANDHYD       0125  1  5.0   13.70    0.90  5.25  50.66 0.93   0.000
    [I%=89.0:S%= 2.00]
*
```

Macville Secondary Plan – Town of Caledon, Region of Peel
Visual OTTHYMO Hydrologic Model Schematic, January 2021, for 1st Submission
Scenario: 10- to 100-Year Storm, PROPOSED
(Results for 100-Year storm with 6-hour AES distribution shown in Schematic)

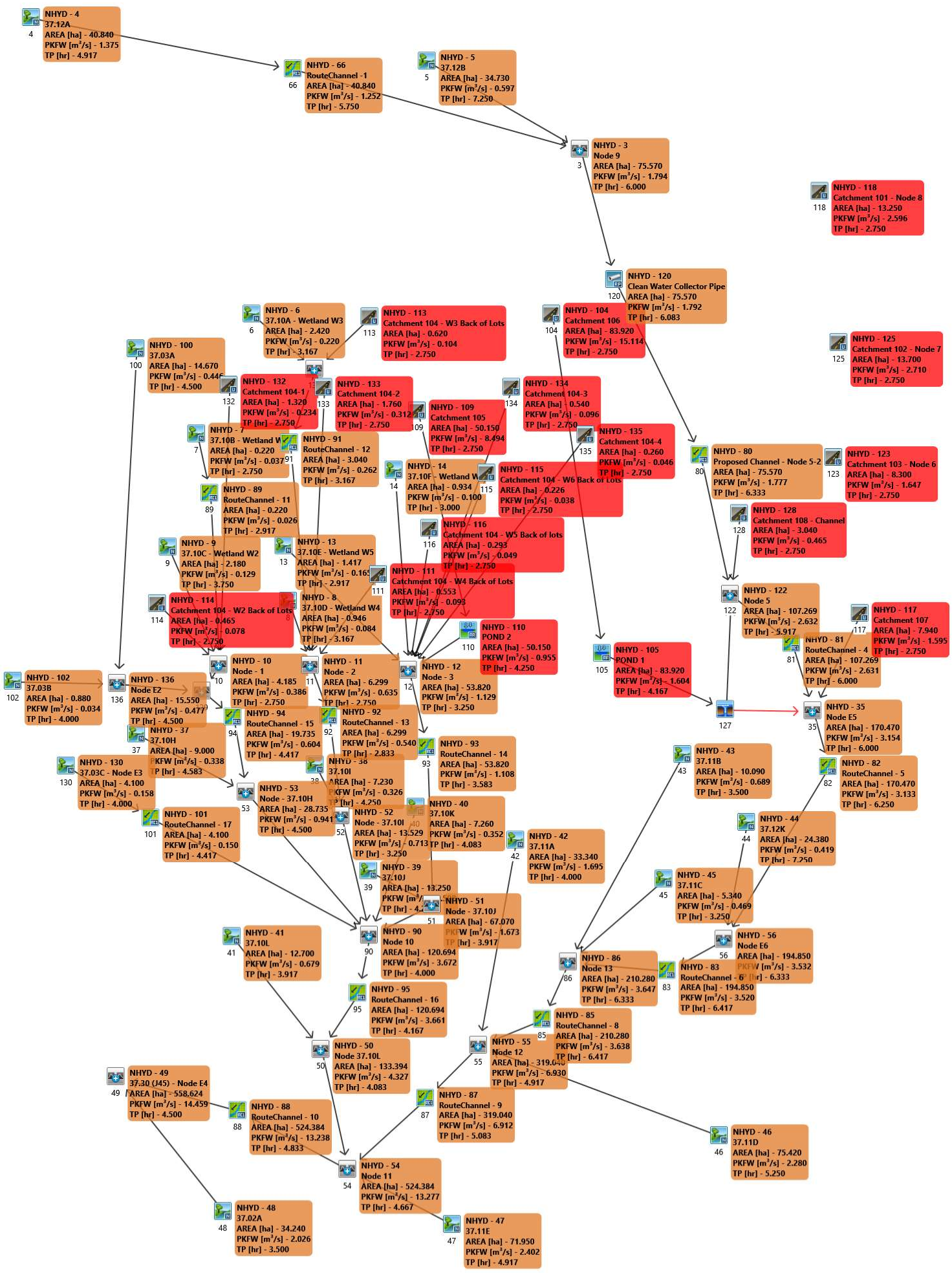

```
==========================================================================================

       V    V   I    SSSSS  U   U    A    L             (v 6.2.2001)
       V    V   I    SS     U   U   A A   L
        V  V    I     SS    U   U  AAAAA  L
        V  V    I      SS   U   U  A   A  L
         VV     I    SSSSS  UUUUU  A   A  LLLLL

        OOO   TTTTT  TTTTT  H   H  Y   Y  M   M   OOO    TM
       O   O    T      T    H   H   Y Y   MM MM  O   O
       O   O    T      T    H   H    Y    M   M  O   O
        OOO     T      T    H   H    Y    M   M   OOO
Developed and Distributed by Smart City Water Inc
Copyright 2007 - 2020 Smart City Water Inc
All rights reserved.


                  *****  S U M M A R Y   O U T P U T  *****


  Input   filename: C:\Program Files (x86)\Visual OTTHYMO 6.2\VO2\voin.dat
  Output  filename: C:\Users\pchiocchio\AppData\Local\Civica\VH5\d59fad6f-510d-48b8-a35a-1bee91f156cc\ead70ee2-3e6d-4fd7-a538-
0fb6e8613db9\s
  Summary filename: C:\Users\pchiocchio\AppData\Local\Civica\VH5\d59fad6f-510d-48b8-a35a-1bee91f156cc\ead70ee2-3e6d-4fd7-a538-
0fb6e8613db9\s


DATE: 02/02/2021                          TIME: 05:26:38

USER:


COMMENTS: ____________________________________________________________


  ************************************************
  ** SIMULATION : 10 - Year (6hr AES)           **
  ************************************************

  W/E COMMAND             HYD ID   DT    AREA  ' Qpeak Tpeak   R.V. R.C.   Qbase
                                   min     ha   '  cms   hrs     mm          cms

      START @  0.00 hrs
      --------------------
    READ STORM                 15.0
    [ Ptot= 55.69 mm ]
    fname : C:\Users\pchiocchio\AppData\Local\Temp\a25ec5df-3cf9-4173-b468-dc45d4356e5f\c578a8f4-221c-4c52-bf4c-
    remark: 10 Year 6 Hour AES (Bloor, TRCA)
*
 ** CALIB NASHYD         0004  1  5.0   40.84    0.82  5.00  35.35 0.63   0.000
    [CN=95.0         ]
    [ N = 2.5:Tp 2.02]
*
    CHANNEL[ 2:  0004]   0066  1  5.0   40.84    0.74  5.92  35.35  n/a   0.000
*
    READ STORM                 15.0
    [ Ptot= 55.69 mm ]
    fname : C:\Users\pchiocchio\AppData\Local\Temp\a25ec5df-3cf9-4173-b468-dc45d4356e5f\c578a8f4-221c-4c52-bf4c-
    remark: 10 Year 6 Hour AES (Bloor, TRCA)
*
 ** CALIB NASHYD         0005  1  5.0   34.73    0.36  7.33  35.35 0.63   0.000
    [CN=95.0         ]
    [ N = 2.5:Tp 4.29]
*
    ADD [  0005+  0066]  0003  3  5.0   75.57    1.07  6.08  35.35  n/a   0.000
*
    PIPE   [ 2:  0003]   0120  1  5.0   75.57    1.07  6.25  35.35  n/a   0.000
*
    CHANNEL[ 2:  0120]   0080  1  5.0   75.57    1.05  6.58  35.35  n/a   0.000
*
    READ STORM                 15.0
    [ Ptot= 55.69 mm ]
    fname : C:\Users\pchiocchio\AppData\Local\Temp\a25ec5df-3cf9-4173-b468-dc45d4356e5f\c578a8f4-221c-4c52-bf4c-
    remark: 10 Year 6 Hour AES (Bloor, TRCA)
*
 ** CALIB STANDHYD       0104  1  5.0   83.92    9.65  2.75  49.18 0.88   0.000
    [I%=78.0:S%= 2.00]
*
 ** Reservoir
    OUTFLOW:             0105  1  5.0   83.92    0.91  4.42  45.60  n/a   0.000
*
    DUHYD                0127  1  5.0   83.92    0.91  4.42  45.60  n/a   0.000
       MAJOR SYSTEM:     0127  2  5.0   12.76    0.43  4.42  45.60  n/a   0.000
       MINOR SYSTEM:     0127  3  5.0   71.16    0.49  3.00  45.60  n/a   0.000
*
    READ STORM                 15.0
    [ Ptot= 55.69 mm ]
    fname : C:\Users\pchiocchio\AppData\Local\Temp\a25ec5df-3cf9-4173-b468-dc45d4356e5f\c578a8f4-221c-4c52-bf4c-
    remark: 10 Year 6 Hour AES (Bloor, TRCA)
*
 *  CALIB STANDHYD       0128  1  5.0    3.04    0.27  2.75  38.17 0.69   0.000
    [I%=34.0:S%= 2.00]
*
    ADD [  0127+  0128]  0122  3  5.0   15.80    0.46  4.25  44.17  n/a   0.000
```

```
*
    ADD [  0122+  0080]  0122  1  5.0   91.37    1.34  6.25  36.87  n/a   0.000
*
    CHANNEL[ 2:  0122]   0081  1  5.0   91.37    1.34  6.33  36.87  n/a   0.000
*
    READ STORM                 15.0
    [ Ptot= 55.69 mm ]
    fname : C:\Users\pchiocchio\AppData\Local\Temp\a25ec5df-3cf9-4173-b468-dc45d4356e5f\c578a8f4-221c-4c52-bf4c-
    remark: 10 Year 6 Hour AES (Bloor, TRCA)
*
 ** CALIB STANDHYD       0117  1  5.0    7.94    1.10  2.75  52.94 0.95   0.000
    [I%=93.0:S%= 2.00]
*
    ADD [  0117+  0127]  0035  3  5.0   79.10    1.19  2.75  46.33  n/a   0.000
*
    ADD [  0035+  0081]  0035  1  5.0  170.47    1.85  6.25  41.26  n/a   0.000
*
    CHANNEL[ 2:  0035]   0082  1  5.0  170.47    1.82  6.50  41.24  n/a   0.000
*
    READ STORM                 15.0
    [ Ptot= 55.69 mm ]
    fname : C:\Users\pchiocchio\AppData\Local\Temp\a25ec5df-3cf9-4173-b468-dc45d4356e5f\c578a8f4-221c-4c52-bf4c-
    remark: 10 Year 6 Hour AES (Bloor, TRCA)
*
 ** CALIB NASHYD         0044  1  5.0   24.38    0.25  7.33  35.35 0.63   0.000
    [CN=95.0         ]
    [ N = 2.5:Tp 4.29]
*
    ADD [  0044+  0082]  0056  3  5.0  194.85    2.06  6.58  40.51  n/a   0.000
*
    CHANNEL[ 2:  0056]   0083  1  5.0  194.85    2.06  6.83  40.49  n/a   0.000
*
    READ STORM                 15.0
    [ Ptot= 55.69 mm ]
    fname : C:\Users\pchiocchio\AppData\Local\Temp\a25ec5df-3cf9-4173-b468-dc45d4356e5f\c578a8f4-221c-4c52-bf4c-
    remark: 10 Year 6 Hour AES (Bloor, TRCA)
*
 ** CALIB NASHYD         0043  1  5.0   10.09    0.41  3.58  35.34 0.63   0.000
    [CN=95.0         ]
    [ N = 2.5:Tp 0.81]
*
    READ STORM                 15.0
    [ Ptot= 55.69 mm ]
    fname : C:\Users\pchiocchio\AppData\Local\Temp\a25ec5df-3cf9-4173-b468-dc45d4356e5f\c578a8f4-221c-4c52-bf4c-
    remark: 10 Year 6 Hour AES (Bloor, TRCA)
*
 ** CALIB NASHYD         0045  1  5.0    5.34    0.28  3.25  35.33 0.63   0.000
    [CN=95.0         ]
    [ N = 2.5:Tp 0.56]
*
    ADD [  0043+  0045]  0086  3  5.0   15.43    0.67  3.42  35.34  n/a   0.000
*
    ADD [  0086+  0083]  0086  1  5.0  210.28    2.12  6.58  40.11  n/a   0.000
*
    CHANNEL[ 2:  0086]   0085  1  5.0  210.28    2.11  6.83  40.11  n/a   0.000
*
    READ STORM                 15.0
    [ Ptot= 55.69 mm ]
    fname : C:\Users\pchiocchio\AppData\Local\Temp\a25ec5df-3cf9-4173-b468-dc45d4356e5f\c578a8f4-221c-4c52-bf4c-
    remark: 10 Year 6 Hour AES (Bloor, TRCA)
*
 ** CALIB NASHYD         0042  1  5.0   33.34    1.01  4.08  35.35 0.63   0.000
    [CN=95.0         ]
    [ N = 2.5:Tp 1.21]
*
    READ STORM                 15.0
    [ Ptot= 55.69 mm ]
    fname : C:\Users\pchiocchio\AppData\Local\Temp\a25ec5df-3cf9-4173-b468-dc45d4356e5f\c578a8f4-221c-4c52-bf4c-
    remark: 10 Year 6 Hour AES (Bloor, TRCA)
*
 ** CALIB NASHYD         0046  1  5.0   75.42    1.36  5.33  35.35 0.63   0.000
    [CN=95.0         ]
    [ N = 2.5:Tp 2.29]
*
    ADD [  0042+  0046]  0055  3  5.0  108.76    2.21  4.67  35.35  n/a   0.000
*
    ADD [  0055+  0085]  0055  1  5.0  319.04    3.99  4.83  38.48  n/a   0.000
*
    CHANNEL[ 2:  0055]   0087  1  5.0  319.04    3.97  5.00  38.48  n/a   0.000
*
    READ STORM                 15.0
    [ Ptot= 55.69 mm ]
    fname : C:\Users\pchiocchio\AppData\Local\Temp\a25ec5df-3cf9-4173-b468-dc45d4356e5f\c578a8f4-221c-4c52-bf4c-
    remark: 10 Year 6 Hour AES (Bloor, TRCA)
*
 ** CALIB NASHYD         0006  1  5.0    2.42    0.13  3.17  33.70 0.61   0.000
    [CN=94.0         ]
    [ N = 2.5:Tp 0.50]
*
    READ STORM                 15.0
    [ Ptot= 55.69 mm ]
    fname : C:\Users\pchiocchio\AppData\Local\Temp\a25ec5df-3cf9-4173-b468-dc45d4356e5f\c578a8f4-221c-4c52-bf4c-
    remark: 10 Year 6 Hour AES (Bloor, TRCA)
*
 *  CALIB STANDHYD       0113  1  5.0    0.62    0.07  2.75  42.16 0.76   0.000
```

```
    [I%=50.0:S%= 2.00]
*
    ADD [  0113+  0006]  0131  3  5.0    3.04    0.15  3.08  35.43  n/a   0.000
*
    CHANNEL[ 2:  0131]   0091  1  5.0    3.04    0.14  3.33  35.42  n/a   0.000
*
    READ STORM                 15.0
    [ Ptot= 55.69 mm ]
    fname : C:\Users\pchiocchio\AppData\Local\Temp\a25ec5df-3cf9-4173-b468-dc45d4356e5f\c578a8f4-221c-4c52-bf4c-
    remark: 10 Year 6 Hour AES (Bloor, TRCA)
*
 *  CALIB NASHYD         0008  1  5.0    0.95    0.05  3.25  33.70 0.61   0.000
    [CN=94.0         ]
    [ N = 2.5:Tp 0.52]
*
    READ STORM                 15.0
    [ Ptot= 55.69 mm ]
    fname : C:\Users\pchiocchio\AppData\Local\Temp\a25ec5df-3cf9-4173-b468-dc45d4356e5f\c578a8f4-221c-4c52-bf4c-
    remark: 10 Year 6 Hour AES (Bloor, TRCA)
*
 *  CALIB STANDHYD       0111  1  5.0    0.55    0.06  2.75  42.16 0.76   0.000
    [I%=50.0:S%= 2.00]
*
    READ STORM                 15.0
    [ Ptot= 55.69 mm ]
    fname : C:\Users\pchiocchio\AppData\Local\Temp\a25ec5df-3cf9-4173-b468-dc45d4356e5f\c578a8f4-221c-4c52-bf4c-
    remark: 10 Year 6 Hour AES (Bloor, TRCA)
*
 *  CALIB STANDHYD       0133  1  5.0    1.76    0.20  2.75  45.67 0.82   0.000
    [I%=64.0:S%= 2.00]
*
    ADD [  0111+  0133]  0011  3  5.0    2.31    0.26  2.75  44.83  n/a   0.000
*
    ADD [  0011+  0008]  0011  1  5.0    3.26    0.29  2.75  41.60  n/a   0.000
*
    ADD [  0011+  0091]  0011  3  5.0    6.30    0.37  2.75  38.62  n/a   0.000
*
    CHANNEL[ 2:  0011]   0092  1  5.0    6.30    0.31  2.83  38.61  n/a   0.000
*
    READ STORM                 15.0
    [ Ptot= 55.69 mm ]
    fname : C:\Users\pchiocchio\AppData\Local\Temp\a25ec5df-3cf9-4173-b468-dc45d4356e5f\c578a8f4-221c-4c52-bf4c-
    remark: 10 Year 6 Hour AES (Bloor, TRCA)
*
 *  CALIB NASHYD         0038  1  5.0    7.23    0.19  4.33  33.72 0.61   0.000
    [CN=94.0         ]
    [ N = 2.5:Tp 1.35]
*
    ADD [  0038+  0092]  0052  3  5.0   13.53    0.41  3.33  36.00  n/a   0.000
*
    READ STORM                 15.0
    [ Ptot= 55.69 mm ]
    fname : C:\Users\pchiocchio\AppData\Local\Temp\a25ec5df-3cf9-4173-b468-dc45d4356e5f\c578a8f4-221c-4c52-bf4c-
    remark: 10 Year 6 Hour AES (Bloor, TRCA)
*
 *  CALIB NASHYD         0007  1  5.0    0.22    0.02  2.75  33.23 0.60   0.000
    [CN=94.0         ]
    [ N = 2.5:Tp 0.15]
*
    CHANNEL[ 2:  0007]   0089  1  5.0    0.22    0.01  2.92  32.74  n/a   0.000
*
    READ STORM                 15.0
    [ Ptot= 55.69 mm ]
    fname : C:\Users\pchiocchio\AppData\Local\Temp\a25ec5df-3cf9-4173-b468-dc45d4356e5f\c578a8f4-221c-4c52-bf4c-
    remark: 10 Year 6 Hour AES (Bloor, TRCA)
*
 *  CALIB NASHYD         0009  1  5.0    2.18    0.08  3.75  33.72 0.61   0.000
    [CN=94.0         ]
    [ N = 2.5:Tp 0.94]
*
    READ STORM                 15.0
    [ Ptot= 55.69 mm ]
    fname : C:\Users\pchiocchio\AppData\Local\Temp\a25ec5df-3cf9-4173-b468-dc45d4356e5f\c578a8f4-221c-4c52-bf4c-
    remark: 10 Year 6 Hour AES (Bloor, TRCA)
*
 *  CALIB STANDHYD       0114  1  5.0    0.46    0.05  2.75  42.15 0.76   0.000
    [I%=50.0:S%= 2.00]
*
    READ STORM                 15.0
    [ Ptot= 55.69 mm ]
    fname : C:\Users\pchiocchio\AppData\Local\Temp\a25ec5df-3cf9-4173-b468-dc45d4356e5f\c578a8f4-221c-4c52-bf4c-
    remark: 10 Year 6 Hour AES (Bloor, TRCA)
*
 *  CALIB STANDHYD       0132  1  5.0    1.32    0.15  2.75  45.67 0.82   0.000
    [I%=64.0:S%= 2.00]
*
    ADD [  0114+  0132]  0010  3  5.0    1.79    0.20  2.75  44.76  n/a   0.000
*
    ADD [  0010+  0089]  0010  1  5.0    2.01    0.22  2.75  43.44  n/a   0.000
*
    ADD [  0010+  0009]  0010  3  5.0    4.18    0.24  2.75  38.37  n/a   0.000
*
    READ STORM                 15.0
    [ Ptot= 55.69 mm ]
    fname : C:\Users\pchiocchio\AppData\Local\Temp\a25ec5df-3cf9-4173-b468-dc45d4356e5f\c578a8f4-221c-4c52-bf4c-
```

```
    remark: 10 Year 6 Hour AES (Bloor, TRCA)
*
 *  CALIB NASHYD         0100  1  5.0   14.67    0.24  4.58  23.06 0.41   0.000
    [CN=85.0         ]
    [ N = 2.5:Tp 1.53]
*
    READ STORM                 15.0
    [ Ptot= 55.69 mm ]
    fname : C:\Users\pchiocchio\AppData\Local\Temp\a25ec5df-3cf9-4173-b468-dc45d4356e5f\c578a8f4-221c-4c52-bf4c-
    remark: 10 Year 6 Hour AES (Bloor, TRCA)
*
 *  CALIB NASHYD         0102  1  5.0    0.88    0.02  4.08  23.06 0.41   0.000
    [CN=85.0         ]
    [ N = 2.5:Tp 1.12]
*
    ADD [  0100+  0102]  0136  3  5.0   15.55    0.25  4.58  23.06  n/a   0.000
*
    ADD [  0010+  0136]  0129  3  5.0   19.73    0.34  4.25  26.31  n/a   0.000
*
    CHANNEL[ 2:  0129]   0094  1  5.0   19.73    0.32  4.75  26.31  n/a   0.000
*
    READ STORM                 15.0
    [ Ptot= 55.69 mm ]
    fname : C:\Users\pchiocchio\AppData\Local\Temp\a25ec5df-3cf9-4173-b468-dc45d4356e5f\c578a8f4-221c-4c52-bf4c-
    remark: 10 Year 6 Hour AES (Bloor, TRCA)
*
 *  CALIB NASHYD         0037  1  5.0    9.00    0.20  4.67  33.72 0.61   0.000
    [CN=94.0         ]
    [ N = 2.5:Tp 1.70]
*
    ADD [  0037+  0094]  0053  3  5.0   28.73    0.51  4.67  28.63  n/a   0.000
*
    READ STORM                 15.0
    [ Ptot= 55.69 mm ]
    fname : C:\Users\pchiocchio\AppData\Local\Temp\a25ec5df-3cf9-4173-b468-dc45d4356e5f\c578a8f4-221c-4c52-bf4c-
    remark: 10 Year 6 Hour AES (Bloor, TRCA)
*
 *  CALIB NASHYD         0013  1  5.0    1.42    0.10  2.92  33.66 0.60   0.000
    [CN=94.0         ]
    [ N = 2.5:Tp 0.34]
*
    READ STORM                 15.0
    [ Ptot= 55.69 mm ]
    fname : C:\Users\pchiocchio\AppData\Local\Temp\a25ec5df-3cf9-4173-b468-dc45d4356e5f\c578a8f4-221c-4c52-bf4c-
    remark: 10 Year 6 Hour AES (Bloor, TRCA)
*
 *  CALIB NASHYD         0014  1  5.0    0.93    0.06  3.00  33.68 0.60   0.000
    [CN=94.0         ]
    [ N = 2.5:Tp 0.39]
*
    READ STORM                 15.0
    [ Ptot= 55.69 mm ]
    fname : C:\Users\pchiocchio\AppData\Local\Temp\a25ec5df-3cf9-4173-b468-dc45d4356e5f\c578a8f4-221c-4c52-bf4c-
    remark: 10 Year 6 Hour AES (Bloor, TRCA)
*
 *  CALIB STANDHYD       0109  1  5.0   50.15    5.46  2.75  46.68 0.84   0.000
    [I%=68.0:S%= 2.00]
*
 ** Reservoir
    OUTFLOW:             0110  1  5.0   50.15    0.56  4.42  42.70  n/a   0.000
*
    READ STORM                 15.0
    [ Ptot= 55.69 mm ]
    fname : C:\Users\pchiocchio\AppData\Local\Temp\a25ec5df-3cf9-4173-b468-dc45d4356e5f\c578a8f4-221c-4c52-bf4c-
    remark: 10 Year 6 Hour AES (Bloor, TRCA)
*
 *  CALIB STANDHYD       0115  1  5.0    0.23    0.02  2.75  42.13 0.76   0.000
    [I%=50.0:S%= 2.00]
*
    READ STORM                 15.0
    [ Ptot= 55.69 mm ]
    fname : C:\Users\pchiocchio\AppData\Local\Temp\a25ec5df-3cf9-4173-b468-dc45d4356e5f\c578a8f4-221c-4c52-bf4c-
    remark: 10 Year 6 Hour AES (Bloor, TRCA)
*
 *  CALIB STANDHYD       0116  1  5.0    0.29    0.03  2.75  42.15 0.76   0.000
    [I%=50.0:S%= 2.00]
*
    READ STORM                 15.0
    [ Ptot= 55.69 mm ]
    fname : C:\Users\pchiocchio\AppData\Local\Temp\a25ec5df-3cf9-4173-b468-dc45d4356e5f\c578a8f4-221c-4c52-bf4c-
    remark: 10 Year 6 Hour AES (Bloor, TRCA)
*
 *  CALIB STANDHYD       0134  1  5.0    0.54    0.06  2.75  45.66 0.82   0.000
    [I%=64.0:S%= 2.00]
*
    READ STORM                 15.0
    [ Ptot= 55.69 mm ]
    fname : C:\Users\pchiocchio\AppData\Local\Temp\a25ec5df-3cf9-4173-b468-dc45d4356e5f\c578a8f4-221c-4c52-bf4c-
    remark: 10 Year 6 Hour AES (Bloor, TRCA)
*
 *  CALIB STANDHYD       0135  1  5.0    0.26    0.03  2.75  45.65 0.82   0.000
    [I%=64.0:S%= 2.00]
*
    ADD [  0110+  0115]  0012  3  5.0   50.38    0.56  4.33  42.70  n/a   0.000
*
```

```
    ADD [  0012+  0116]  0012  1  5.0   50.67    0.57  4.25  42.69  n/a   0.000
*
    ADD [  0012+  0013]  0012  3  5.0   52.09    0.59  4.00  42.45  n/a   0.000
*
    ADD [  0012+  0134]  0012  1  5.0   52.63    0.60  3.75  42.48  n/a   0.000
*
    ADD [  0012+  0135]  0012  3  5.0   52.89    0.61  3.75  42.50  n/a   0.000
*
    ADD [  0012+  0014]  0012  1  5.0   53.82    0.64  3.75  42.34  n/a   0.000
*
    CHANNEL[ 2:  0012]   0093  1  5.0   53.82    0.63  3.83  42.33  n/a   0.000
*
    READ STORM                 15.0
    [ Ptot= 55.69 mm ]
    fname : C:\Users\pchiocchio\AppData\Local\Temp\a25ec5df-3cf9-4173-b468-dc45d4356e5f\c578a8f4-221c-4c52-bf4c-
    remark: 10 Year 6 Hour AES (Bloor, TRCA)
*
 *  CALIB NASHYD         0039  1  5.0   13.25    0.35  4.33  33.72 0.61   0.000
    [CN=94.0         ]
    [ N = 2.5:Tp 1.35]
*
    ADD [  0039+  0093]  0051  3  5.0   67.07    0.98  4.17  40.63  n/a   0.000
*
    READ STORM                 15.0
    [ Ptot= 55.69 mm ]
    fname : C:\Users\pchiocchio\AppData\Local\Temp\a25ec5df-3cf9-4173-b468-dc45d4356e5f\c578a8f4-221c-4c52-bf4c-
    remark: 10 Year 6 Hour AES (Bloor, TRCA)
*
 *  CALIB NASHYD         0040  1  5.0    7.26    0.21  4.17  33.72 0.61   0.000
    [CN=94.0         ]
    [ N = 2.5:Tp 1.23]
*
    READ STORM                 15.0
    [ Ptot= 55.69 mm ]
    fname : C:\Users\pchiocchio\AppData\Local\Temp\a25ec5df-3cf9-4173-b468-dc45d4356e5f\c578a8f4-221c-4c52-bf4c-
    remark: 10 Year 6 Hour AES (Bloor, TRCA)
*
 *  CALIB NASHYD         0130  1  5.0    4.10    0.08  4.08  23.06 0.41   0.000
    [CN=85.0         ]
    [ N = 2.5:Tp 1.12]
*
    CHANNEL[ 2:  0130]   0101  1  5.0    4.10    0.08  4.50  23.06  n/a   0.000
*
    ADD [  0101+  0040]  0090  3  5.0   11.36    0.28  4.25  29.87  n/a   0.000
*
    ADD [  0090+  0051]  0090  1  5.0   78.43    1.26  4.17  39.07  n/a   0.000
*
    ADD [  0090+  0052]  0090  3  5.0   91.96    1.63  4.00  38.62  n/a   0.000
*
    ADD [  0090+  0053]  0090  1  5.0  120.69    2.11  4.25  36.24  n/a   0.000
*
    CHANNEL[ 2:  0090]   0095  1  5.0  120.69    2.10  4.33  36.23  n/a   0.000
*
    READ STORM                 15.0
    [ Ptot= 55.69 mm ]
    fname : C:\Users\pchiocchio\AppData\Local\Temp\a25ec5df-3cf9-4173-b468-dc45d4356e5f\c578a8f4-221c-4c52-bf4c-
    remark: 10 Year 6 Hour AES (Bloor, TRCA)
*
 *  CALIB NASHYD         0041  1  5.0   12.70    0.40  4.00  33.72 0.61   0.000
    [CN=94.0         ]
    [ N = 2.5:Tp 1.08]
*
    ADD [  0041+  0095]  0050  3  5.0  133.39    2.48  4.25  35.99  n/a   0.000
*
    READ STORM                 15.0
    [ Ptot= 55.69 mm ]
    fname : C:\Users\pchiocchio\AppData\Local\Temp\a25ec5df-3cf9-4173-b468-dc45d4356e5f\c578a8f4-221c-4c52-bf4c-
    remark: 10 Year 6 Hour AES (Bloor, TRCA)
*
 *  CALIB NASHYD         0047  1  5.0   71.95    1.43  5.00  35.35 0.63   0.000
    [CN=95.0         ]
    [ N = 2.5:Tp 2.04]
*
    ADD [  0047+  0050]  0054  3  5.0  205.34    3.82  4.50  35.77  n/a   0.000
*
    ADD [  0054+  0087]  0054  1  5.0  524.38    7.73  4.67  37.42  n/a   0.000
*
    CHANNEL[ 2:  0054]   0088  1  5.0  524.38    7.71  4.83  37.42  n/a   0.000
*
    READ STORM                 15.0
    [ Ptot= 55.69 mm ]
    fname : C:\Users\pchiocchio\AppData\Local\Temp\a25ec5df-3cf9-4173-b468-dc45d4356e5f\c578a8f4-221c-4c52-bf4c-
    remark: 10 Year 6 Hour AES (Bloor, TRCA)
*
 *  CALIB NASHYD         0048  1  5.0   34.24    1.12  3.58  28.24 0.51   0.000
    [CN=90.0         ]
    [ N = 2.5:Tp 0.77]
*
    ADD [  0048+  0088]  0049  3  5.0  558.62    8.38  4.67  36.85  n/a   0.000
*
    READ STORM                 15.0
    [ Ptot= 55.69 mm ]
    fname : C:\Users\pchiocchio\AppData\Local\Temp\a25ec5df-3cf9-4173-b468-dc45d4356e5f\c578a8f4-221c-4c52-bf4c-
    remark: 10 Year 6 Hour AES (Bloor, TRCA)
*
```

```
 *  CALIB STANDHYD       0118  1  5.0   13.25    1.75  2.75  51.18 0.92   0.000
    [I%=86.0:S%= 2.00]
*
    READ STORM                 15.0
    [ Ptot= 55.69 mm ]
    fname : C:\Users\pchiocchio\AppData\Local\Temp\a25ec5df-3cf9-4173-b468-dc45d4356e5f\c578a8f4-221c-4c52-bf4c-
    remark: 10 Year 6 Hour AES (Bloor, TRCA)
*
 *  CALIB STANDHYD       0123  1  5.0    8.30    1.12  2.75  51.94 0.93   0.000
    [I%=89.0:S%= 2.00]
*
    READ STORM                 15.0
    [ Ptot= 55.69 mm ]
    fname : C:\Users\pchiocchio\AppData\Local\Temp\a25ec5df-3cf9-4173-b468-dc45d4356e5f\c578a8f4-221c-4c52-bf4c-
    remark: 10 Year 6 Hour AES (Bloor, TRCA)
*
 *  CALIB STANDHYD       0125  1  5.0   13.70    1.84  2.75  51.94 0.93   0.000
    [I%=89.0:S%= 2.00]
*
 FINISH

==========================================================================================================
```

```
==========================================================================================

       V    V   I    SSSSS  U   U    A    L             (v 6.2.2001)
       V    V   I    SS     U   U   A A   L
        V  V    I     SS    U   U  AAAAA  L
        V  V    I      SS   U   U  A   A  L
         VV     I    SSSSS  UUUUU  A   A  LLLLL

        OOO   TTTTT  TTTTT  H   H  Y   Y  M   M   OOO    TM
       O   O    T      T    H   H   Y Y   MM MM  O   O
       O   O    T      T    H   H    Y    M   M  O   O
        OOO     T      T    H   H    Y    M   M   OOO
Developed and Distributed by Smart City Water Inc
Copyright 2007 - 2020 Smart City Water Inc
All rights reserved.


                  *****  S U M M A R Y   O U T P U T  *****


  Input   filename: C:\Program Files (x86)\Visual OTTHYMO 6.2\VO2\voin.dat
  Output  filename: C:\Users\pchiocchio\AppData\Local\Civica\VH5\d59fad6f-510d-48b8-a35a-1bee91f156cc\a6cd319c-cd7e-44ad-bf7a-
c8e5cbeb1951\s
  Summary filename: C:\Users\pchiocchio\AppData\Local\Civica\VH5\d59fad6f-510d-48b8-a35a-1bee91f156cc\a6cd319c-cd7e-44ad-bf7a-
c8e5cbeb1951\s


DATE: 02/02/2021                          TIME: 05:26:36

USER:


COMMENTS: ____________________________________________________________


  ************************************************
  ** SIMULATION : 10 - Year (12hr AES)          **
  ************************************************

  W/E COMMAND             HYD ID   DT    AREA  ' Qpeak Tpeak   R.V. R.C.   Qbase
                                  min     ha   '  cms   hrs     mm          cms

      START @  0.00 hrs
      --------------------
    READ STORM                 15.0
    [ Ptot= 62.71 mm ]
    fname : C:\Users\pchiocchio\AppData\Local\Temp\a25ec5df-3cf9-4173-b468-dc45d4356e5f\cfd1e5d6-45b3-4b9b-9878-
    remark: 10 Year 12 Hour AES (Bloor, TRCA)
*
 ** CALIB NASHYD         0004  1  5.0   40.84    0.84  7.50  42.05 0.67   0.000
    [CN=95.0         ]
    [ N = 2.5:Tp 2.02]
*
    CHANNEL[ 2:  0004]   0066  1  5.0   40.84    0.78  8.33  42.04  n/a   0.000
*
    READ STORM                 15.0
    [ Ptot= 62.71 mm ]
    fname : C:\Users\pchiocchio\AppData\Local\Temp\a25ec5df-3cf9-4173-b468-dc45d4356e5f\cfd1e5d6-45b3-4b9b-9878-
    remark: 10 Year 12 Hour AES (Bloor, TRCA)
*
 ** CALIB NASHYD         0005  1  5.0   34.73    0.39 10.00  42.05 0.67   0.000
    [CN=95.0         ]
    [ N = 2.5:Tp 4.29]
*
    ADD [  0005+  0066]  0003  3  5.0   75.57    1.14  8.67  42.05  n/a   0.000
*
    PIPE   [ 2:  0003]   0120  1  5.0   75.57    1.14  8.83  42.05  n/a   0.000
*
    CHANNEL[ 2:  0120]   0080  1  5.0   75.57    1.12  9.08  42.05  n/a   0.000
*
    READ STORM                 15.0
    [ Ptot= 62.71 mm ]
    fname : C:\Users\pchiocchio\AppData\Local\Temp\a25ec5df-3cf9-4173-b468-dc45d4356e5f\cfd1e5d6-45b3-4b9b-9878-
    remark: 10 Year 12 Hour AES (Bloor, TRCA)
*
 ** CALIB STANDHYD       0104  1  5.0   83.92    5.94  5.25  55.91 0.89   0.000
    [I%=78.0:S%= 2.00]
*
 ** Reservoir
    OUTFLOW:             0105  1  5.0   83.92    0.94  7.42  52.14  n/a   0.000
*
    DUHYD                0127  1  5.0   83.92    0.94  7.42  52.14  n/a   0.000
       MAJOR SYSTEM:     0127  2  5.0   15.62    0.45  7.42  52.14  n/a   0.000
       MINOR SYSTEM:     0127  3  5.0   68.30    0.49  5.33  52.14  n/a   0.000
*
    READ STORM                 15.0
    [ Ptot= 62.71 mm ]
    fname : C:\Users\pchiocchio\AppData\Local\Temp\a25ec5df-3cf9-4173-b468-dc45d4356e5f\cfd1e5d6-45b3-4b9b-9878-
    remark: 10 Year 12 Hour AES (Bloor, TRCA)
*
 ** CALIB STANDHYD       0128  1  5.0    3.04    0.18  5.25  44.30 0.71   0.000
    [I%=34.0:S%= 2.00]
*
    ADD [  0127+  0128]  0122  3  5.0   18.66    0.48  7.25  50.86  n/a   0.000
```

```
*
    ADD [  0122+  0080]  0122  1  5.0   94.23    1.52  8.67  43.79  n/a   0.000
*
    CHANNEL[ 2:  0122]   0081  1  5.0   94.23    1.51  8.83  43.79  n/a   0.000
*
    READ STORM                 15.0
    [ Ptot= 62.71 mm ]
    fname : C:\Users\pchiocchio\AppData\Local\Temp\a25ec5df-3cf9-4173-b468-dc45d4356e5f\cfd1e5d6-45b3-4b9b-9878-
    remark: 10 Year 12 Hour AES (Bloor, TRCA)
*
 ** CALIB STANDHYD       0117  1  5.0    7.94    0.62  5.25  59.86 0.95   0.000
    [I%=93.0:S%= 2.00]
*
    ADD [  0117+  0127]  0035  3  5.0   76.24    1.07  5.25  52.94  n/a   0.000
*
    ADD [  0035+  0081]  0035  1  5.0  170.47    2.03  8.83  47.88  n/a   0.000
*
    CHANNEL[ 2:  0035]   0082  1  5.0  170.47    2.02  9.08  47.86  n/a   0.000
*
    READ STORM                 15.0
    [ Ptot= 62.71 mm ]
    fname : C:\Users\pchiocchio\AppData\Local\Temp\a25ec5df-3cf9-4173-b468-dc45d4356e5f\cfd1e5d6-45b3-4b9b-9878-
    remark: 10 Year 12 Hour AES (Bloor, TRCA)
*
 ** CALIB NASHYD         0044  1  5.0   24.38    0.28 10.00  42.05 0.67   0.000
    [CN=95.0         ]
    [ N = 2.5:Tp 4.29]
*
    ADD [  0044+  0082]  0056  3  5.0  194.85    2.29  9.17  47.14  n/a   0.000
*
    CHANNEL[ 2:  0056]   0083  1  5.0  194.85    2.28  9.33  47.12  n/a   0.000
*
    READ STORM                 15.0
    [ Ptot= 62.71 mm ]
    fname : C:\Users\pchiocchio\AppData\Local\Temp\a25ec5df-3cf9-4173-b468-dc45d4356e5f\cfd1e5d6-45b3-4b9b-9878-
    remark: 10 Year 12 Hour AES (Bloor, TRCA)
*
 ** CALIB NASHYD         0043  1  5.0   10.09    0.39  5.83  42.04 0.67   0.000
    [CN=95.0         ]
    [ N = 2.5:Tp 0.81]
*
    READ STORM                 15.0
    [ Ptot= 62.71 mm ]
    fname : C:\Users\pchiocchio\AppData\Local\Temp\a25ec5df-3cf9-4173-b468-dc45d4356e5f\cfd1e5d6-45b3-4b9b-9878-
    remark: 10 Year 12 Hour AES (Bloor, TRCA)
*
 ** CALIB NASHYD         0045  1  5.0    5.34    0.26  5.50  42.03 0.67   0.000
    [CN=95.0         ]
    [ N = 2.5:Tp 0.56]
*
    ADD [  0043+  0045]  0086  3  5.0   15.43    0.63  5.67  42.03  n/a   0.000
*
    ADD [  0086+  0083]  0086  1  5.0  210.28    2.38  9.08  46.75  n/a   0.000
*
    CHANNEL[ 2:  0086]   0085  1  5.0  210.28    2.37  9.33  46.74  n/a   0.000
*
    READ STORM                 15.0
    [ Ptot= 62.71 mm ]
    fname : C:\Users\pchiocchio\AppData\Local\Temp\a25ec5df-3cf9-4173-b468-dc45d4356e5f\cfd1e5d6-45b3-4b9b-9878-
    remark: 10 Year 12 Hour AES (Bloor, TRCA)
*
 ** CALIB NASHYD         0042  1  5.0   33.34    0.99  6.42  42.04 0.67   0.000
    [CN=95.0         ]
    [ N = 2.5:Tp 1.21]
*
    READ STORM                 15.0
    [ Ptot= 62.71 mm ]
    fname : C:\Users\pchiocchio\AppData\Local\Temp\a25ec5df-3cf9-4173-b468-dc45d4356e5f\cfd1e5d6-45b3-4b9b-9878-
    remark: 10 Year 12 Hour AES (Bloor, TRCA)
*
 ** CALIB NASHYD         0046  1  5.0   75.42    1.42  7.75  42.05 0.67   0.000
    [CN=95.0         ]
    [ N = 2.5:Tp 2.29]
*
    ADD [  0042+  0046]  0055  3  5.0  108.76    2.24  7.08  42.04  n/a   0.000
*
    ADD [  0055+  0085]  0055  1  5.0  319.04    4.22  8.08  45.14  n/a   0.000
*
    CHANNEL[ 2:  0055]   0087  1  5.0  319.04    4.22  8.25  45.14  n/a   0.000
*
    READ STORM                 15.0
    [ Ptot= 62.71 mm ]
    fname : C:\Users\pchiocchio\AppData\Local\Temp\a25ec5df-3cf9-4173-b468-dc45d4356e5f\cfd1e5d6-45b3-4b9b-9878-
    remark: 10 Year 12 Hour AES (Bloor, TRCA)
*
 ** CALIB NASHYD         0006  1  5.0    2.42    0.12  5.42  40.28 0.64   0.000
    [CN=94.0         ]
    [ N = 2.5:Tp 0.50]
*
    READ STORM                 15.0
    [ Ptot= 62.71 mm ]
    fname : C:\Users\pchiocchio\AppData\Local\Temp\a25ec5df-3cf9-4173-b468-dc45d4356e5f\cfd1e5d6-45b3-4b9b-9878-
    remark: 10 Year 12 Hour AES (Bloor, TRCA)
*
 *  CALIB STANDHYD       0113  1  5.0    0.62    0.04  5.25  48.50 0.77   0.000
```

```
    [I%=50.0:S%= 2.00]
*
    ADD [  0113+  0006]  0131  3  5.0    3.04    0.15  5.25  41.96  n/a   0.000
*
    CHANNEL[ 2:  0131]   0091  1  5.0    3.04    0.13  5.58  41.96  n/a   0.000
*
    READ STORM                 15.0
    [ Ptot= 62.71 mm ]
    fname : C:\Users\pchiocchio\AppData\Local\Temp\a25ec5df-3cf9-4173-b468-dc45d4356e5f\cfd1e5d6-45b3-4b9b-9878-
    remark: 10 Year 12 Hour AES (Bloor, TRCA)
*
 *  CALIB NASHYD         0008  1  5.0    0.95    0.05  5.50  40.29 0.64   0.000
    [CN=94.0         ]
    [ N = 2.5:Tp 0.52]
*
    READ STORM                 15.0
    [ Ptot= 62.71 mm ]
    fname : C:\Users\pchiocchio\AppData\Local\Temp\a25ec5df-3cf9-4173-b468-dc45d4356e5f\cfd1e5d6-45b3-4b9b-9878-
    remark: 10 Year 12 Hour AES (Bloor, TRCA)
*
 *  CALIB STANDHYD       0111  1  5.0    0.55    0.04  5.25  48.50 0.77   0.000
    [I%=50.0:S%= 2.00]
*
    READ STORM                 15.0
    [ Ptot= 62.71 mm ]
    fname : C:\Users\pchiocchio\AppData\Local\Temp\a25ec5df-3cf9-4173-b468-dc45d4356e5f\cfd1e5d6-45b3-4b9b-9878-
    remark: 10 Year 12 Hour AES (Bloor, TRCA)
*
 *  CALIB STANDHYD       0133  1  5.0    1.76    0.12  5.25  52.21 0.83   0.000
    [I%=64.0:S%= 2.00]
*
    ADD [  0111+  0133]  0011  3  5.0    2.31    0.16  5.25  51.32  n/a   0.000
*
    ADD [  0011+  0008]  0011  1  5.0    3.26    0.20  5.25  48.12  n/a   0.000
*
    ADD [  0011+  0091]  0011  3  5.0    6.30    0.31  5.25  45.15  n/a   0.000
*
    CHANNEL[ 2:  0011]   0092  1  5.0    6.30    0.28  5.33  45.14  n/a   0.000
*
    READ STORM                 15.0
    [ Ptot= 62.71 mm ]
    fname : C:\Users\pchiocchio\AppData\Local\Temp\a25ec5df-3cf9-4173-b468-dc45d4356e5f\cfd1e5d6-45b3-4b9b-9878-
    remark: 10 Year 12 Hour AES (Bloor, TRCA)
*
 *  CALIB NASHYD         0038  1  5.0    7.23    0.19  6.58  40.31 0.64   0.000
    [CN=94.0         ]
    [ N = 2.5:Tp 1.35]
*
    ADD [  0038+  0092]  0052  3  5.0   13.53    0.39  5.83  42.56  n/a   0.000
*
    READ STORM                 15.0
    [ Ptot= 62.71 mm ]
    fname : C:\Users\pchiocchio\AppData\Local\Temp\a25ec5df-3cf9-4173-b468-dc45d4356e5f\cfd1e5d6-45b3-4b9b-9878-
    remark: 10 Year 12 Hour AES (Bloor, TRCA)
*
 *  CALIB NASHYD         0007  1  5.0    0.22    0.01  5.25  39.72 0.63   0.000
    [CN=94.0         ]
    [ N = 2.5:Tp 0.15]
*
    CHANNEL[ 2:  0007]   0089  1  5.0    0.22    0.01  5.33  39.49  n/a   0.000
*
    READ STORM                 15.0
    [ Ptot= 62.71 mm ]
    fname : C:\Users\pchiocchio\AppData\Local\Temp\a25ec5df-3cf9-4173-b468-dc45d4356e5f\cfd1e5d6-45b3-4b9b-9878-
    remark: 10 Year 12 Hour AES (Bloor, TRCA)
*
 *  CALIB NASHYD         0009  1  5.0    2.18    0.07  6.00  40.30 0.64   0.000
    [CN=94.0         ]
    [ N = 2.5:Tp 0.94]
*
    READ STORM                 15.0
    [ Ptot= 62.71 mm ]
    fname : C:\Users\pchiocchio\AppData\Local\Temp\a25ec5df-3cf9-4173-b468-dc45d4356e5f\cfd1e5d6-45b3-4b9b-9878-
    remark: 10 Year 12 Hour AES (Bloor, TRCA)
*
 *  CALIB STANDHYD       0114  1  5.0    0.46    0.03  5.25  48.50 0.77   0.000
    [I%=50.0:S%= 2.00]
*
    READ STORM                 15.0
    [ Ptot= 62.71 mm ]
    fname : C:\Users\pchiocchio\AppData\Local\Temp\a25ec5df-3cf9-4173-b468-dc45d4356e5f\cfd1e5d6-45b3-4b9b-9878-
    remark: 10 Year 12 Hour AES (Bloor, TRCA)
*
 *  CALIB STANDHYD       0132  1  5.0    1.32    0.09  5.25  52.21 0.83   0.000
    [I%=64.0:S%= 2.00]
*
    ADD [  0114+  0132]  0010  3  5.0    1.79    0.12  5.25  51.24  n/a   0.000
*
    ADD [  0010+  0089]  0010  1  5.0    2.01    0.13  5.25  49.95  n/a   0.000
*
    ADD [  0010+  0009]  0010  3  5.0    4.18    0.18  5.25  44.93  n/a   0.000
*
    READ STORM                 15.0
    [ Ptot= 62.71 mm ]
    fname : C:\Users\pchiocchio\AppData\Local\Temp\a25ec5df-3cf9-4173-b468-dc45d4356e5f\cfd1e5d6-45b3-4b9b-9878-
```

```
    remark: 10 Year 12 Hour AES (Bloor, TRCA)
*
 *  CALIB NASHYD         0100  1  5.0   14.67    0.24  7.00  28.48 0.45   0.000
    [CN=85.0         ]
    [ N = 2.5:Tp 1.53]
*
    READ STORM                 15.0
    [ Ptot= 62.71 mm ]
    fname : C:\Users\pchiocchio\AppData\Local\Temp\a25ec5df-3cf9-4173-b468-dc45d4356e5f\cfd1e5d6-45b3-4b9b-9878-
    remark: 10 Year 12 Hour AES (Bloor, TRCA)
*
 *  CALIB NASHYD         0102  1  5.0    0.88    0.02  6.42  28.48 0.45   0.000
    [CN=85.0         ]
    [ N = 2.5:Tp 1.12]
*
    ADD [  0100+  0102]  0136  3  5.0   15.55    0.26  6.92  28.48  n/a   0.000
*
    ADD [  0010+  0136]  0129  3  5.0   19.73    0.35  6.25  31.97  n/a   0.000
*
    CHANNEL[ 2:  0129]   0094  1  5.0   19.73    0.33  7.17  31.97  n/a   0.000
*
    READ STORM                 15.0
    [ Ptot= 62.71 mm ]
    fname : C:\Users\pchiocchio\AppData\Local\Temp\a25ec5df-3cf9-4173-b468-dc45d4356e5f\cfd1e5d6-45b3-4b9b-9878-
    remark: 10 Year 12 Hour AES (Bloor, TRCA)
*
 *  CALIB NASHYD         0037  1  5.0    9.00    0.20  7.08  40.31 0.64   0.000
    [CN=94.0         ]
    [ N = 2.5:Tp 1.70]
*
    ADD [  0037+  0094]  0053  3  5.0   28.73    0.53  7.08  34.58  n/a   0.000
*
    READ STORM                 15.0
    [ Ptot= 62.71 mm ]
    fname : C:\Users\pchiocchio\AppData\Local\Temp\a25ec5df-3cf9-4173-b468-dc45d4356e5f\cfd1e5d6-45b3-4b9b-9878-
    remark: 10 Year 12 Hour AES (Bloor, TRCA)
*
 *  CALIB NASHYD         0013  1  5.0    1.42    0.08  5.33  40.24 0.64   0.000
    [CN=94.0         ]
    [ N = 2.5:Tp 0.34]
*
    READ STORM                 15.0
    [ Ptot= 62.71 mm ]
    fname : C:\Users\pchiocchio\AppData\Local\Temp\a25ec5df-3cf9-4173-b468-dc45d4356e5f\cfd1e5d6-45b3-4b9b-9878-
    remark: 10 Year 12 Hour AES (Bloor, TRCA)
*
 *  CALIB NASHYD         0014  1  5.0    0.93    0.05  5.33  40.26 0.64   0.000
    [CN=94.0         ]
    [ N = 2.5:Tp 0.39]
*
    READ STORM                 15.0
    [ Ptot= 62.71 mm ]
    fname : C:\Users\pchiocchio\AppData\Local\Temp\a25ec5df-3cf9-4173-b468-dc45d4356e5f\cfd1e5d6-45b3-4b9b-9878-
    remark: 10 Year 12 Hour AES (Bloor, TRCA)
*
 *  CALIB STANDHYD       0109  1  5.0   50.15    3.40  5.25  53.27 0.85   0.000
    [I%=68.0:S%= 2.00]
*
 ** Reservoir
    OUTFLOW:             0110  1  5.0   50.15    0.58  7.33  49.11  n/a   0.000
*
    READ STORM                 15.0
    [ Ptot= 62.71 mm ]
    fname : C:\Users\pchiocchio\AppData\Local\Temp\a25ec5df-3cf9-4173-b468-dc45d4356e5f\cfd1e5d6-45b3-4b9b-9878-
    remark: 10 Year 12 Hour AES (Bloor, TRCA)
*
 *  CALIB STANDHYD       0115  1  5.0    0.23    0.01  5.25  48.48 0.77   0.000
    [I%=50.0:S%= 2.00]
*
    READ STORM                 15.0
    [ Ptot= 62.71 mm ]
    fname : C:\Users\pchiocchio\AppData\Local\Temp\a25ec5df-3cf9-4173-b468-dc45d4356e5f\cfd1e5d6-45b3-4b9b-9878-
    remark: 10 Year 12 Hour AES (Bloor, TRCA)
*
 *  CALIB STANDHYD       0116  1  5.0    0.29    0.02  5.25  48.49 0.77   0.000
    [I%=50.0:S%= 2.00]
*
    READ STORM                 15.0
    [ Ptot= 62.71 mm ]
    fname : C:\Users\pchiocchio\AppData\Local\Temp\a25ec5df-3cf9-4173-b468-dc45d4356e5f\cfd1e5d6-45b3-4b9b-9878-
    remark: 10 Year 12 Hour AES (Bloor, TRCA)
*
 *  CALIB STANDHYD       0134  1  5.0    0.54    0.04  5.25  52.20 0.83   0.000
    [I%=64.0:S%= 2.00]
*
    READ STORM                 15.0
    [ Ptot= 62.71 mm ]
    fname : C:\Users\pchiocchio\AppData\Local\Temp\a25ec5df-3cf9-4173-b468-dc45d4356e5f\cfd1e5d6-45b3-4b9b-9878-
    remark: 10 Year 12 Hour AES (Bloor, TRCA)
*
 *  CALIB STANDHYD       0135  1  5.0    0.26    0.02  5.25  52.17 0.83   0.000
    [I%=64.0:S%= 2.00]
*
    ADD [  0110+  0115]  0012  3  5.0   50.38    0.58  7.25  49.11  n/a   0.000
*
```

```
    ADD [  0012+  0116]  0012  1  5.0   50.67    0.58  7.25  49.10  n/a   0.000
*
    ADD [  0012+  0013]  0012  3  5.0   52.09    0.60  6.83  48.86  n/a   0.000
*
    ADD [  0012+  0134]  0012  1  5.0   52.63    0.61  6.75  48.90  n/a   0.000
*
    ADD [  0012+  0135]  0012  3  5.0   52.89    0.61  6.67  48.91  n/a   0.000
*
    ADD [  0012+  0014]  0012  1  5.0   53.82    0.63  6.25  48.76  n/a   0.000
*
    CHANNEL[ 2:  0012]   0093  1  5.0   53.82    0.63  6.58  48.74  n/a   0.000
*
    READ STORM                 15.0
    [ Ptot= 62.71 mm ]
    fname : C:\Users\pchiocchio\AppData\Local\Temp\a25ec5df-3cf9-4173-b468-dc45d4356e5f\cfd1e5d6-45b3-4b9b-9878-
    remark: 10 Year 12 Hour AES (Bloor, TRCA)
*
 *  CALIB NASHYD         0039  1  5.0   13.25    0.35  6.58  40.31 0.64   0.000
    [CN=94.0         ]
    [ N = 2.5:Tp 1.35]
*
    ADD [  0039+  0093]  0051  3  5.0   67.07    0.98  6.58  47.08  n/a   0.000
*
    READ STORM                 15.0
    [ Ptot= 62.71 mm ]
    fname : C:\Users\pchiocchio\AppData\Local\Temp\a25ec5df-3cf9-4173-b468-dc45d4356e5f\cfd1e5d6-45b3-4b9b-9878-
    remark: 10 Year 12 Hour AES (Bloor, TRCA)
*
 *  CALIB NASHYD         0040  1  5.0    7.26    0.20  6.42  40.31 0.64   0.000
    [CN=94.0         ]
    [ N = 2.5:Tp 1.23]
*
    READ STORM                 15.0
    [ Ptot= 62.71 mm ]
    fname : C:\Users\pchiocchio\AppData\Local\Temp\a25ec5df-3cf9-4173-b468-dc45d4356e5f\cfd1e5d6-45b3-4b9b-9878-
    remark: 10 Year 12 Hour AES (Bloor, TRCA)
*
 *  CALIB NASHYD         0130  1  5.0    4.10    0.08  6.42  28.48 0.45   0.000
    [CN=85.0         ]
    [ N = 2.5:Tp 1.12]
*
    CHANNEL[ 2:  0130]   0101  1  5.0    4.10    0.08  6.83  28.48  n/a   0.000
*
    ADD [  0101+  0040]  0090  3  5.0   11.36    0.28  6.58  36.04  n/a   0.000
*
    ADD [  0090+  0051]  0090  1  5.0   78.43    1.26  6.58  45.48  n/a   0.000
*
    ADD [  0090+  0052]  0090  3  5.0   91.96    1.62  6.33  45.05  n/a   0.000
*
    ADD [  0090+  0053]  0090  1  5.0  120.69    2.11  6.58  42.56  n/a   0.000
*
    CHANNEL[ 2:  0090]   0095  1  5.0  120.69    2.10  6.75  42.55  n/a   0.000
*
    READ STORM                 15.0
    [ Ptot= 62.71 mm ]
    fname : C:\Users\pchiocchio\AppData\Local\Temp\a25ec5df-3cf9-4173-b468-dc45d4356e5f\cfd1e5d6-45b3-4b9b-9878-
    remark: 10 Year 12 Hour AES (Bloor, TRCA)
*
 *  CALIB NASHYD         0041  1  5.0   12.70    0.39  6.25  40.31 0.64   0.000
    [CN=94.0         ]
    [ N = 2.5:Tp 1.08]
*
    ADD [  0041+  0095]  0050  3  5.0  133.39    2.47  6.58  42.34  n/a   0.000
*
    READ STORM                 15.0
    [ Ptot= 62.71 mm ]
    fname : C:\Users\pchiocchio\AppData\Local\Temp\a25ec5df-3cf9-4173-b468-dc45d4356e5f\cfd1e5d6-45b3-4b9b-9878-
    remark: 10 Year 12 Hour AES (Bloor, TRCA)
*
 *  CALIB NASHYD         0047  1  5.0   71.95    1.47  7.50  42.05 0.67   0.000
    [CN=95.0         ]
    [ N = 2.5:Tp 2.04]
*
    ADD [  0047+  0050]  0054  3  5.0  205.34    3.86  6.92  42.24  n/a   0.000
*
    ADD [  0054+  0087]  0054  1  5.0  524.38    7.89  7.33  44.00  n/a   0.000
*
    CHANNEL[ 2:  0054]   0088  1  5.0  524.38    7.88  7.50  44.00  n/a   0.000
*
    READ STORM                 15.0
    [ Ptot= 62.71 mm ]
    fname : C:\Users\pchiocchio\AppData\Local\Temp\a25ec5df-3cf9-4173-b468-dc45d4356e5f\cfd1e5d6-45b3-4b9b-9878-
    remark: 10 Year 12 Hour AES (Bloor, TRCA)
*
 *  CALIB NASHYD         0048  1  5.0   34.24    1.07  5.83  34.32 0.55   0.000
    [CN=90.0         ]
    [ N = 2.5:Tp 0.77]
*
    ADD [  0048+  0088]  0049  3  5.0  558.62    8.49  7.25  43.40  n/a   0.000
*
    READ STORM                 15.0
    [ Ptot= 62.71 mm ]
    fname : C:\Users\pchiocchio\AppData\Local\Temp\a25ec5df-3cf9-4173-b468-dc45d4356e5f\cfd1e5d6-45b3-4b9b-9878-
    remark: 10 Year 12 Hour AES (Bloor, TRCA)
*
```

```
 *  CALIB STANDHYD       0118  1  5.0   13.25    1.00  5.25  58.02 0.93   0.000
    [I%=86.0:S%= 2.00]
*
    READ STORM                 15.0
    [ Ptot= 62.71 mm ]
    fname : C:\Users\pchiocchio\AppData\Local\Temp\a25ec5df-3cf9-4173-b468-dc45d4356e5f\cfd1e5d6-45b3-4b9b-9878-
    remark: 10 Year 12 Hour AES (Bloor, TRCA)
*
 *  CALIB STANDHYD       0123  1  5.0    8.30    0.63  5.25  58.81 0.94   0.000
    [I%=89.0:S%= 2.00]
*
    READ STORM                 15.0
    [ Ptot= 62.71 mm ]
    fname : C:\Users\pchiocchio\AppData\Local\Temp\a25ec5df-3cf9-4173-b468-dc45d4356e5f\cfd1e5d6-45b3-4b9b-9878-
    remark: 10 Year 12 Hour AES (Bloor, TRCA)
*
 *  CALIB STANDHYD       0125  1  5.0   13.70    1.05  5.25  58.81 0.94   0.000
    [I%=89.0:S%= 2.00]
*
```

```
==========================================================================================

       V    V   I    SSSSS  U   U    A    L             (v 6.2.2001)
       V    V   I    SS     U   U   A A   L
        V  V    I     SS    U   U  AAAAA  L
        V  V    I      SS   U   U  A   A  L
         VV     I    SSSSS  UUUUU  A   A  LLLLL

        OOO   TTTTT  TTTTT  H   H  Y   Y  M   M   OOO    TM
       O   O    T      T    H   H   Y Y   MM MM  O   O
       O   O    T      T    H   H    Y    M   M  O   O
        OOO     T      T    H   H    Y    M   M   OOO
Developed and Distributed by Smart City Water Inc
Copyright 2007 - 2020 Smart City Water Inc
All rights reserved.


                  *****  S U M M A R Y   O U T P U T  *****


  Input   filename: C:\Program Files (x86)\Visual OTTHYMO 6.2\VO2\voin.dat
  Output  filename: C:\Users\pchiocchio\AppData\Local\Civica\VH5\d59fad6f-510d-48b8-a35a-1bee91f156cc\2e61a6dc-f09c-4a05-86a6-
7d597f8392c5\s
  Summary filename: C:\Users\pchiocchio\AppData\Local\Civica\VH5\d59fad6f-510d-48b8-a35a-1bee91f156cc\2e61a6dc-f09c-4a05-86a6-
7d597f8392c5\s


DATE: 02/02/2021                          TIME: 05:26:31

USER:


COMMENTS: ____________________________________________________________


  ************************************************
  ** SIMULATION : 25 - Year (6hr AES)           **
  ************************************************

  W/E COMMAND             HYD ID   DT    AREA  ' Qpeak Tpeak   R.V. R.C.   Qbase
                                   min     ha   '  cms   hrs     mm          cms

      START @  0.00 hrs
      --------------------
    READ STORM                 15.0
    [ Ptot= 65.59 mm ]
    fname : C:\Users\pchiocchio\AppData\Local\Temp\a25ec5df-3cf9-4173-b468-dc45d4356e5f\cb2278f1-a1e4-4ebe-8c57-
    remark: 25 Year 6 Hour AES (Bloor, TRCA)
*
 ** CALIB NASHYD         0004  1  5.0   40.84    1.04  5.00  44.81 0.68   0.000
    [CN=95.0         ]
    [ N = 2.5:Tp 2.02]
*
    CHANNEL[ 2:  0004]   0066  1  5.0   40.84    0.94  5.83  44.81  n/a   0.000
*
    READ STORM                 15.0
    [ Ptot= 65.59 mm ]
    fname : C:\Users\pchiocchio\AppData\Local\Temp\a25ec5df-3cf9-4173-b468-dc45d4356e5f\cb2278f1-a1e4-4ebe-8c57-
    remark: 25 Year 6 Hour AES (Bloor, TRCA)
*
 ** CALIB NASHYD         0005  1  5.0   34.73    0.45  7.33  44.81 0.68   0.000
    [CN=95.0         ]
    [ N = 2.5:Tp 4.29]
*
    ADD [  0005+  0066]  0003  3  5.0   75.57    1.36  6.08  44.81  n/a   0.000
*
    PIPE   [ 2:  0003]   0120  1  5.0   75.57    1.35  6.25  44.81  n/a   0.000
*
    CHANNEL[ 2:  0120]   0080  1  5.0   75.57    1.34  6.58  44.81  n/a   0.000
*
    READ STORM                 15.0
    [ Ptot= 65.59 mm ]
    fname : C:\Users\pchiocchio\AppData\Local\Temp\a25ec5df-3cf9-4173-b468-dc45d4356e5f\cb2278f1-a1e4-4ebe-8c57-
    remark: 25 Year 6 Hour AES (Bloor, TRCA)
*
 ** CALIB STANDHYD       0104  1  5.0   83.92   11.62  2.75  58.68 0.89   0.000
    [I%=78.0:S%= 2.00]
*
 ** Reservoir
    OUTFLOW:             0105  1  5.0   83.92    1.18  4.33  55.03  n/a   0.000
*
    DUHYD                0127  1  5.0   83.92    1.18  4.33  55.03  n/a   0.000
       MAJOR SYSTEM:     0127  2  5.0   19.87    0.70  4.33  55.03  n/a   0.000
       MINOR SYSTEM:     0127  3  5.0   64.05    0.49  2.83  55.03  n/a   0.000
*
    READ STORM                 15.0
    [ Ptot= 65.59 mm ]
    fname : C:\Users\pchiocchio\AppData\Local\Temp\a25ec5df-3cf9-4173-b468-dc45d4356e5f\cb2278f1-a1e4-4ebe-8c57-
    remark: 25 Year 6 Hour AES (Bloor, TRCA)
*
 *  CALIB STANDHYD       0128  1  5.0    3.04    0.36  2.75  46.85 0.71   0.000
    [I%=34.0:S%= 2.00]
*
    ADD [  0127+  0128]  0122  3  5.0   22.91    0.74  4.25  53.94  n/a   0.000
```

```
*
    ADD [  0122+  0080]  0122  1  5.0   98.48    1.83  6.17  46.94  n/a   0.000
*
    CHANNEL[ 2:  0122]   0081  1  5.0   98.48    1.83  6.25  46.94  n/a   0.000
*
    READ STORM                 15.0
    [ Ptot= 65.59 mm ]
    fname : C:\Users\pchiocchio\AppData\Local\Temp\a25ec5df-3cf9-4173-b468-dc45d4356e5f\cb2278f1-a1e4-4ebe-8c57-
    remark: 25 Year 6 Hour AES (Bloor, TRCA)
*
 ** CALIB STANDHYD       0117  1  5.0    7.94    1.30  2.75  62.71 0.96   0.000
    [I%=93.0:S%= 2.00]
*
    ADD [  0117+  0127]  0035  3  5.0   71.99    1.66  2.75  55.87  n/a   0.000
*
    ADD [  0035+  0081]  0035  1  5.0  170.47    2.35  6.25  50.71  n/a   0.000
*
    CHANNEL[ 2:  0035]   0082  1  5.0  170.47    2.32  6.33  50.69  n/a   0.000
*
    READ STORM                 15.0
    [ Ptot= 65.59 mm ]
    fname : C:\Users\pchiocchio\AppData\Local\Temp\a25ec5df-3cf9-4173-b468-dc45d4356e5f\cb2278f1-a1e4-4ebe-8c57-
    remark: 25 Year 6 Hour AES (Bloor, TRCA)
*
 ** CALIB NASHYD         0044  1  5.0   24.38    0.32  7.33  44.81 0.68   0.000
    [CN=95.0         ]
    [ N = 2.5:Tp 4.29]
*
    ADD [  0044+  0082]  0056  3  5.0  194.85    2.63  6.42  49.96  n/a   0.000
*
    CHANNEL[ 2:  0056]   0083  1  5.0  194.85    2.62  6.67  49.94  n/a   0.000
*
    READ STORM                 15.0
    [ Ptot= 65.59 mm ]
    fname : C:\Users\pchiocchio\AppData\Local\Temp\a25ec5df-3cf9-4173-b468-dc45d4356e5f\cb2278f1-a1e4-4ebe-8c57-
    remark: 25 Year 6 Hour AES (Bloor, TRCA)
*
 ** CALIB NASHYD         0043  1  5.0   10.09    0.52  3.58  44.80 0.68   0.000
    [CN=95.0         ]
    [ N = 2.5:Tp 0.81]
*
    READ STORM                 15.0
    [ Ptot= 65.59 mm ]
    fname : C:\Users\pchiocchio\AppData\Local\Temp\a25ec5df-3cf9-4173-b468-dc45d4356e5f\cb2278f1-a1e4-4ebe-8c57-
    remark: 25 Year 6 Hour AES (Bloor, TRCA)
*
 ** CALIB NASHYD         0045  1  5.0    5.34    0.35  3.25  44.79 0.68   0.000
    [CN=95.0         ]
    [ N = 2.5:Tp 0.56]
*
    ADD [  0043+  0045]  0086  3  5.0   15.43    0.86  3.42  44.80  n/a   0.000
*
    ADD [  0086+  0083]  0086  1  5.0  210.28    2.71  6.42  49.57  n/a   0.000
*
    CHANNEL[ 2:  0086]   0085  1  5.0  210.28    2.70  6.58  49.56  n/a   0.000
*
    READ STORM                 15.0
    [ Ptot= 65.59 mm ]
    fname : C:\Users\pchiocchio\AppData\Local\Temp\a25ec5df-3cf9-4173-b468-dc45d4356e5f\cb2278f1-a1e4-4ebe-8c57-
    remark: 25 Year 6 Hour AES (Bloor, TRCA)
*
 ** CALIB NASHYD         0042  1  5.0   33.34    1.28  4.08  44.81 0.68   0.000
    [CN=95.0         ]
    [ N = 2.5:Tp 1.21]
*
    READ STORM                 15.0
    [ Ptot= 65.59 mm ]
    fname : C:\Users\pchiocchio\AppData\Local\Temp\a25ec5df-3cf9-4173-b468-dc45d4356e5f\cb2278f1-a1e4-4ebe-8c57-
    remark: 25 Year 6 Hour AES (Bloor, TRCA)
*
 ** CALIB NASHYD         0046  1  5.0   75.42    1.73  5.25  44.81 0.68   0.000
    [CN=95.0         ]
    [ N = 2.5:Tp 2.29]
*
    ADD [  0042+  0046]  0055  3  5.0  108.76    2.81  4.58  44.81  n/a   0.000
*
    ADD [  0055+  0085]  0055  1  5.0  319.04    5.09  4.92  47.94  n/a   0.000
*
    CHANNEL[ 2:  0055]   0087  1  5.0  319.04    5.08  5.08  47.94  n/a   0.000
*
    READ STORM                 15.0
    [ Ptot= 65.59 mm ]
    fname : C:\Users\pchiocchio\AppData\Local\Temp\a25ec5df-3cf9-4173-b468-dc45d4356e5f\cb2278f1-a1e4-4ebe-8c57-
    remark: 25 Year 6 Hour AES (Bloor, TRCA)
*
 ** CALIB NASHYD         0006  1  5.0    2.42    0.16  3.17  43.01 0.66   0.000
    [CN=94.0         ]
    [ N = 2.5:Tp 0.50]
*
    READ STORM                 15.0
    [ Ptot= 65.59 mm ]
    fname : C:\Users\pchiocchio\AppData\Local\Temp\a25ec5df-3cf9-4173-b468-dc45d4356e5f\cb2278f1-a1e4-4ebe-8c57-
    remark: 25 Year 6 Hour AES (Bloor, TRCA)
*
 *  CALIB STANDHYD       0113  1  5.0    0.62    0.08  2.75  51.14 0.78   0.000
```

```
    [I%=50.0:S%= 2.00]
*
    ADD [  0113+  0006]  0131  3  5.0    3.04    0.20  3.08  44.67  n/a   0.000
*
    CHANNEL[ 2:  0131]   0091  1  5.0    3.04    0.19  3.25  44.66  n/a   0.000
*
    READ STORM                 15.0
    [ Ptot= 65.59 mm ]
    fname : C:\Users\pchiocchio\AppData\Local\Temp\a25ec5df-3cf9-4173-b468-dc45d4356e5f\cb2278f1-a1e4-4ebe-8c57-
    remark: 25 Year 6 Hour AES (Bloor, TRCA)
*
 *  CALIB NASHYD         0008  1  5.0    0.95    0.06  3.17  43.01 0.66   0.000
    [CN=94.0         ]
    [ N = 2.5:Tp 0.52]
*
    READ STORM                 15.0
    [ Ptot= 65.59 mm ]
    fname : C:\Users\pchiocchio\AppData\Local\Temp\a25ec5df-3cf9-4173-b468-dc45d4356e5f\cb2278f1-a1e4-4ebe-8c57-
    remark: 25 Year 6 Hour AES (Bloor, TRCA)
*
 *  CALIB STANDHYD       0111  1  5.0    0.55    0.07  2.75  51.14 0.78   0.000
    [I%=50.0:S%= 2.00]
*
    READ STORM                 15.0
    [ Ptot= 65.59 mm ]
    fname : C:\Users\pchiocchio\AppData\Local\Temp\a25ec5df-3cf9-4173-b468-dc45d4356e5f\cb2278f1-a1e4-4ebe-8c57-
    remark: 25 Year 6 Hour AES (Bloor, TRCA)
*
 *  CALIB STANDHYD       0133  1  5.0    1.76    0.25  2.75  54.91 0.84   0.000
    [I%=64.0:S%= 2.00]
*
    ADD [  0111+  0133]  0011  3  5.0    2.31    0.32  2.75  54.01  n/a   0.000
*
    ADD [  0011+  0008]  0011  1  5.0    3.26    0.36  2.75  50.82  n/a   0.000
*
    ADD [  0011+  0091]  0011  3  5.0    6.30    0.47  2.75  47.85  n/a   0.000
*
    CHANNEL[ 2:  0011]   0092  1  5.0    6.30    0.39  2.83  47.83  n/a   0.000
*
    READ STORM                 15.0
    [ Ptot= 65.59 mm ]
    fname : C:\Users\pchiocchio\AppData\Local\Temp\a25ec5df-3cf9-4173-b468-dc45d4356e5f\cb2278f1-a1e4-4ebe-8c57-
    remark: 25 Year 6 Hour AES (Bloor, TRCA)
*
 *  CALIB NASHYD         0038  1  5.0    7.23    0.25  4.25  43.04 0.66   0.000
    [CN=94.0         ]
    [ N = 2.5:Tp 1.35]
*
    ADD [  0038+  0092]  0052  3  5.0   13.53    0.53  3.33  45.27  n/a   0.000
*
    READ STORM                 15.0
    [ Ptot= 65.59 mm ]
    fname : C:\Users\pchiocchio\AppData\Local\Temp\a25ec5df-3cf9-4173-b468-dc45d4356e5f\cb2278f1-a1e4-4ebe-8c57-
    remark: 25 Year 6 Hour AES (Bloor, TRCA)
*
 *  CALIB NASHYD         0007  1  5.0    0.22    0.03  2.75  42.40 0.65   0.000
    [CN=94.0         ]
    [ N = 2.5:Tp 0.15]
*
    CHANNEL[ 2:  0007]   0089  1  5.0    0.22    0.02  2.92  41.90  n/a   0.000
*
    READ STORM                 15.0
    [ Ptot= 65.59 mm ]
    fname : C:\Users\pchiocchio\AppData\Local\Temp\a25ec5df-3cf9-4173-b468-dc45d4356e5f\cb2278f1-a1e4-4ebe-8c57-
    remark: 25 Year 6 Hour AES (Bloor, TRCA)
*
 *  CALIB NASHYD         0009  1  5.0    2.18    0.10  3.75  43.03 0.66   0.000
    [CN=94.0         ]
    [ N = 2.5:Tp 0.94]
*
    READ STORM                 15.0
    [ Ptot= 65.59 mm ]
    fname : C:\Users\pchiocchio\AppData\Local\Temp\a25ec5df-3cf9-4173-b468-dc45d4356e5f\cb2278f1-a1e4-4ebe-8c57-
    remark: 25 Year 6 Hour AES (Bloor, TRCA)
*
 *  CALIB STANDHYD       0114  1  5.0    0.46    0.06  2.75  51.13 0.78   0.000
    [I%=50.0:S%= 2.00]
*
    READ STORM                 15.0
    [ Ptot= 65.59 mm ]
    fname : C:\Users\pchiocchio\AppData\Local\Temp\a25ec5df-3cf9-4173-b468-dc45d4356e5f\cb2278f1-a1e4-4ebe-8c57-
    remark: 25 Year 6 Hour AES (Bloor, TRCA)
*
 *  CALIB STANDHYD       0132  1  5.0    1.32    0.19  2.75  54.91 0.84   0.000
    [I%=64.0:S%= 2.00]
*
    ADD [  0114+  0132]  0010  3  5.0    1.79    0.25  2.75  53.93  n/a   0.000
*
    ADD [  0010+  0089]  0010  1  5.0    2.01    0.26  2.75  52.61  n/a   0.000
*
    ADD [  0010+  0009]  0010  3  5.0    4.18    0.30  2.75  47.62  n/a   0.000
*
    READ STORM                 15.0
    [ Ptot= 65.59 mm ]
    fname : C:\Users\pchiocchio\AppData\Local\Temp\a25ec5df-3cf9-4173-b468-dc45d4356e5f\cb2278f1-a1e4-4ebe-8c57-
```

```
    remark: 25 Year 6 Hour AES (Bloor, TRCA)
*
 *  CALIB NASHYD         0100  1  5.0   14.67    0.32  4.58  30.77 0.47   0.000
    [CN=85.0         ]
    [ N = 2.5:Tp 1.53]
*
    READ STORM                 15.0
    [ Ptot= 65.59 mm ]
    fname : C:\Users\pchiocchio\AppData\Local\Temp\a25ec5df-3cf9-4173-b468-dc45d4356e5f\cb2278f1-a1e4-4ebe-8c57-
    remark: 25 Year 6 Hour AES (Bloor, TRCA)
*
 *  CALIB NASHYD         0102  1  5.0    0.88    0.02  4.08  30.77 0.47   0.000
    [CN=85.0         ]
    [ N = 2.5:Tp 1.12]
*
    ADD [  0100+  0102]  0136  3  5.0   15.55    0.34  4.50  30.77  n/a   0.000
*
    ADD [  0010+  0136]  0129  3  5.0   19.73    0.45  4.25  34.35  n/a   0.000
*
    CHANNEL[ 2:  0129]   0094  1  5.0   19.73    0.43  4.50  34.34  n/a   0.000
*
    READ STORM                 15.0
    [ Ptot= 65.59 mm ]
    fname : C:\Users\pchiocchio\AppData\Local\Temp\a25ec5df-3cf9-4173-b468-dc45d4356e5f\cb2278f1-a1e4-4ebe-8c57-
    remark: 25 Year 6 Hour AES (Bloor, TRCA)
*
 *  CALIB NASHYD         0037  1  5.0    9.00    0.25  4.67  43.04 0.66   0.000
    [CN=94.0         ]
    [ N = 2.5:Tp 1.70]
*
    ADD [  0037+  0094]  0053  3  5.0   28.73    0.68  4.58  37.07  n/a   0.000
*
    READ STORM                 15.0
    [ Ptot= 65.59 mm ]
    fname : C:\Users\pchiocchio\AppData\Local\Temp\a25ec5df-3cf9-4173-b468-dc45d4356e5f\cb2278f1-a1e4-4ebe-8c57-
    remark: 25 Year 6 Hour AES (Bloor, TRCA)
*
 *  CALIB NASHYD         0013  1  5.0    1.42    0.12  2.92  42.96 0.66   0.000
    [CN=94.0         ]
    [ N = 2.5:Tp 0.34]
*
    READ STORM                 15.0
    [ Ptot= 65.59 mm ]
    fname : C:\Users\pchiocchio\AppData\Local\Temp\a25ec5df-3cf9-4173-b468-dc45d4356e5f\cb2278f1-a1e4-4ebe-8c57-
    remark: 25 Year 6 Hour AES (Bloor, TRCA)
*
 *  CALIB NASHYD         0014  1  5.0    0.93    0.07  3.00  42.98 0.66   0.000
    [CN=94.0         ]
    [ N = 2.5:Tp 0.39]
*
    READ STORM                 15.0
    [ Ptot= 65.59 mm ]
    fname : C:\Users\pchiocchio\AppData\Local\Temp\a25ec5df-3cf9-4173-b468-dc45d4356e5f\cb2278f1-a1e4-4ebe-8c57-
    remark: 25 Year 6 Hour AES (Bloor, TRCA)
*
 *  CALIB STANDHYD       0109  1  5.0   50.15    6.72  2.75  55.99 0.85   0.000
    [I%=68.0:S%= 2.00]
*
 ** Reservoir
    OUTFLOW:             0110  1  5.0   50.15    0.73  4.33  51.95  n/a   0.000
*
    READ STORM                 15.0
    [ Ptot= 65.59 mm ]
    fname : C:\Users\pchiocchio\AppData\Local\Temp\a25ec5df-3cf9-4173-b468-dc45d4356e5f\cb2278f1-a1e4-4ebe-8c57-
    remark: 25 Year 6 Hour AES (Bloor, TRCA)
*
 *  CALIB STANDHYD       0115  1  5.0    0.23    0.03  2.75  51.13 0.78   0.000
    [I%=50.0:S%= 2.00]
*
    READ STORM                 15.0
    [ Ptot= 65.59 mm ]
    fname : C:\Users\pchiocchio\AppData\Local\Temp\a25ec5df-3cf9-4173-b468-dc45d4356e5f\cb2278f1-a1e4-4ebe-8c57-
    remark: 25 Year 6 Hour AES (Bloor, TRCA)
*
 *  CALIB STANDHYD       0116  1  5.0    0.29    0.04  2.75  51.12 0.78   0.000
    [I%=50.0:S%= 2.00]
*
    READ STORM                 15.0
    [ Ptot= 65.59 mm ]
    fname : C:\Users\pchiocchio\AppData\Local\Temp\a25ec5df-3cf9-4173-b468-dc45d4356e5f\cb2278f1-a1e4-4ebe-8c57-
    remark: 25 Year 6 Hour AES (Bloor, TRCA)
*
 *  CALIB STANDHYD       0134  1  5.0    0.54    0.08  2.75  54.90 0.84   0.000
    [I%=64.0:S%= 2.00]
*
    READ STORM                 15.0
    [ Ptot= 65.59 mm ]
    fname : C:\Users\pchiocchio\AppData\Local\Temp\a25ec5df-3cf9-4173-b468-dc45d4356e5f\cb2278f1-a1e4-4ebe-8c57-
    remark: 25 Year 6 Hour AES (Bloor, TRCA)
*
 *  CALIB STANDHYD       0135  1  5.0    0.26    0.04  2.75  54.88 0.84   0.000
    [I%=64.0:S%= 2.00]
*
    ADD [  0110+  0115]  0012  3  5.0   50.38    0.74  4.25  51.95  n/a   0.000
*
```

```
    ADD [  0012+  0116]  0012  1  5.0   50.67    0.74  4.25  51.94  n/a   0.000
*
    ADD [  0012+  0013]  0012  3  5.0   52.09    0.78  3.92  51.70  n/a   0.000
*
    ADD [  0012+  0134]  0012  1  5.0   52.63    0.79  3.75  51.73  n/a   0.000
*
    ADD [  0012+  0135]  0012  3  5.0   52.89    0.80  3.75  51.75  n/a   0.000
*
    ADD [  0012+  0014]  0012  1  5.0   53.82    0.84  3.75  51.59  n/a   0.000
*
    CHANNEL[ 2:  0012]   0093  1  5.0   53.82    0.83  3.83  51.57  n/a   0.000
*
    READ STORM                 15.0
    [ Ptot= 65.59 mm ]
    fname : C:\Users\pchiocchio\AppData\Local\Temp\a25ec5df-3cf9-4173-b468-dc45d4356e5f\cb2278f1-a1e4-4ebe-8c57-
    remark: 25 Year 6 Hour AES (Bloor, TRCA)
*
 *  CALIB NASHYD         0039  1  5.0   13.25    0.45  4.25  43.04 0.66   0.000
    [CN=94.0         ]
    [ N = 2.5:Tp 1.35]
*
    ADD [  0039+  0093]  0051  3  5.0   67.07    1.27  4.08  49.89  n/a   0.000
*
    READ STORM                 15.0
    [ Ptot= 65.59 mm ]
    fname : C:\Users\pchiocchio\AppData\Local\Temp\a25ec5df-3cf9-4173-b468-dc45d4356e5f\cb2278f1-a1e4-4ebe-8c57-
    remark: 25 Year 6 Hour AES (Bloor, TRCA)
*
 *  CALIB NASHYD         0040  1  5.0    7.26    0.26  4.08  43.03 0.66   0.000
    [CN=94.0         ]
    [ N = 2.5:Tp 1.23]
*
    READ STORM                 15.0
    [ Ptot= 65.59 mm ]
    fname : C:\Users\pchiocchio\AppData\Local\Temp\a25ec5df-3cf9-4173-b468-dc45d4356e5f\cb2278f1-a1e4-4ebe-8c57-
    remark: 25 Year 6 Hour AES (Bloor, TRCA)
*
 *  CALIB NASHYD         0130  1  5.0    4.10    0.11  4.08  30.77 0.47   0.000
    [CN=85.0         ]
    [ N = 2.5:Tp 1.12]
*
    CHANNEL[ 2:  0130]   0101  1  5.0    4.10    0.11  4.42  30.77  n/a   0.000
*
    ADD [  0101+  0040]  0090  3  5.0   11.36    0.37  4.25  38.61  n/a   0.000
*
    ADD [  0090+  0051]  0090  1  5.0   78.43    1.64  4.17  48.25  n/a   0.000
*
    ADD [  0090+  0052]  0090  3  5.0   91.96    2.10  3.92  47.82  n/a   0.000
*
    ADD [  0090+  0053]  0090  1  5.0  120.69    2.74  4.17  45.26  n/a   0.000
*
    CHANNEL[ 2:  0090]   0095  1  5.0  120.69    2.73  4.33  45.25  n/a   0.000
*
    READ STORM                 15.0
    [ Ptot= 65.59 mm ]
    fname : C:\Users\pchiocchio\AppData\Local\Temp\a25ec5df-3cf9-4173-b468-dc45d4356e5f\cb2278f1-a1e4-4ebe-8c57-
    remark: 25 Year 6 Hour AES (Bloor, TRCA)
*
 *  CALIB NASHYD         0041  1  5.0   12.70    0.51  3.92  43.03 0.66   0.000
    [CN=94.0         ]
    [ N = 2.5:Tp 1.08]
*
    ADD [  0041+  0095]  0050  3  5.0  133.39    3.22  4.25  45.04  n/a   0.000
*
    READ STORM                 15.0
    [ Ptot= 65.59 mm ]
    fname : C:\Users\pchiocchio\AppData\Local\Temp\a25ec5df-3cf9-4173-b468-dc45d4356e5f\cb2278f1-a1e4-4ebe-8c57-
    remark: 25 Year 6 Hour AES (Bloor, TRCA)
*
 *  CALIB NASHYD         0047  1  5.0   71.95    1.82  5.00  44.81 0.68   0.000
    [CN=95.0         ]
    [ N = 2.5:Tp 2.04]
*
    ADD [  0047+  0050]  0054  3  5.0  205.34    4.91  4.50  44.96  n/a   0.000
*
    ADD [  0054+  0087]  0054  1  5.0  524.38    9.91  4.67  46.77  n/a   0.000
*
    CHANNEL[ 2:  0054]   0088  1  5.0  524.38    9.87  4.83  46.77  n/a   0.000
*
    READ STORM                 15.0
    [ Ptot= 65.59 mm ]
    fname : C:\Users\pchiocchio\AppData\Local\Temp\a25ec5df-3cf9-4173-b468-dc45d4356e5f\cb2278f1-a1e4-4ebe-8c57-
    remark: 25 Year 6 Hour AES (Bloor, TRCA)
*
 *  CALIB NASHYD         0048  1  5.0   34.24    1.48  3.58  36.86 0.56   0.000
    [CN=90.0         ]
    [ N = 2.5:Tp 0.77]
*
    ADD [  0048+  0088]  0049  3  5.0  558.62   10.77  4.58  46.16  n/a   0.000
*
    READ STORM                 15.0
    [ Ptot= 65.59 mm ]
    fname : C:\Users\pchiocchio\AppData\Local\Temp\a25ec5df-3cf9-4173-b468-dc45d4356e5f\cb2278f1-a1e4-4ebe-8c57-
    remark: 25 Year 6 Hour AES (Bloor, TRCA)
*
```

```
 *  CALIB STANDHYD       0118  1  5.0   13.25    2.09  2.75  60.83 0.93   0.000
    [I%=86.0:S%= 2.00]
*
    READ STORM                 15.0
    [ Ptot= 65.59 mm ]
    fname : C:\Users\pchiocchio\AppData\Local\Temp\a25ec5df-3cf9-4173-b468-dc45d4356e5f\cb2278f1-a1e4-4ebe-8c57-
    remark: 25 Year 6 Hour AES (Bloor, TRCA)
*
 *  CALIB STANDHYD       0123  1  5.0    8.30    1.33  2.75  61.63 0.94   0.000
    [I%=89.0:S%= 2.00]
*
    READ STORM                 15.0
    [ Ptot= 65.59 mm ]
    fname : C:\Users\pchiocchio\AppData\Local\Temp\a25ec5df-3cf9-4173-b468-dc45d4356e5f\cb2278f1-a1e4-4ebe-8c57-
    remark: 25 Year 6 Hour AES (Bloor, TRCA)
*
 *  CALIB STANDHYD       0125  1  5.0   13.70    2.19  2.75  61.63 0.94   0.000
    [I%=89.0:S%= 2.00]
*
```

```
==========================================================================================

       V    V   I    SSSSS  U   U    A    L             (v 6.2.2001)
       V    V   I    SS     U   U   A A   L
        V  V    I     SS    U   U  AAAAA  L
        V  V    I      SS   U   U  A   A  L
         VV     I    SSSSS  UUUUU  A   A  LLLLL

        OOO   TTTTT  TTTTT  H   H  Y   Y  M   M   OOO    TM
       O   O    T      T    H   H   Y Y   MM MM  O   O
       O   O    T      T    H   H    Y    M   M  O   O
        OOO     T      T    H   H    Y    M   M   OOO
Developed and Distributed by Smart City Water Inc
Copyright 2007 - 2020 Smart City Water Inc
All rights reserved.


                  *****  S U M M A R Y   O U T P U T  *****


  Input   filename: C:\Program Files (x86)\Visual OTTHYMO 6.2\VO2\voin.dat
  Output  filename: C:\Users\pchiocchio\AppData\Local\Civica\VH5\d59fad6f-510d-48b8-a35a-1bee91f156cc\4861216a-48e0-4937-aee3-
225dc893b488\s
  Summary filename: C:\Users\pchiocchio\AppData\Local\Civica\VH5\d59fad6f-510d-48b8-a35a-1bee91f156cc\4861216a-48e0-4937-aee3-
225dc893b488\s


DATE: 02/02/2021                          TIME: 05:26:33

USER:


COMMENTS: ____________________________________________________________


  ************************************************
  ** SIMULATION : 25 - Year (12hr AES)          **
  ************************************************

  W/E COMMAND             HYD ID   DT    AREA  ' Qpeak Tpeak   R.V. R.C.   Qbase
                                   min     ha   '  cms   hrs     mm          cms

      START @  0.00 hrs
      --------------------
    READ STORM                 15.0
    [ Ptot= 73.10 mm ]
    fname : C:\Users\pchiocchio\AppData\Local\Temp\a25ec5df-3cf9-4173-b468-dc45d4356e5f\a7a80449-cdd9-4cae-bb04-
    remark: 25 Year 12 Hour AES (Bloor, TRCA)
*
 ** CALIB NASHYD         0004  1  5.0   40.84    1.05  7.42  52.07 0.71   0.000
    [CN=95.0         ]
    [ N = 2.5:Tp 2.02]
*
    CHANNEL[ 2:  0004]   0066  1  5.0   40.84    0.97  8.25  52.07  n/a   0.000
*
    READ STORM                 15.0
    [ Ptot= 73.10 mm ]
    fname : C:\Users\pchiocchio\AppData\Local\Temp\a25ec5df-3cf9-4173-b468-dc45d4356e5f\a7a80449-cdd9-4cae-bb04-
    remark: 25 Year 12 Hour AES (Bloor, TRCA)
*
 ** CALIB NASHYD         0005  1  5.0   34.73    0.49 10.00  52.07 0.71   0.000
    [CN=95.0         ]
    [ N = 2.5:Tp 4.29]
*
    ADD [  0005+  0066]  0003  3  5.0   75.57    1.41  8.58  52.07  n/a   0.000
*
    PIPE   [ 2:  0003]   0120  1  5.0   75.57    1.41  8.75  52.07  n/a   0.000
*
    CHANNEL[ 2:  0120]   0080  1  5.0   75.57    1.40  9.00  52.07  n/a   0.000
*
    READ STORM                 15.0
    [ Ptot= 73.10 mm ]
    fname : C:\Users\pchiocchio\AppData\Local\Temp\a25ec5df-3cf9-4173-b468-dc45d4356e5f\a7a80449-cdd9-4cae-bb04-
    remark: 25 Year 12 Hour AES (Bloor, TRCA)
*
 ** CALIB STANDHYD       0104  1  5.0   83.92    7.03  5.25  65.93 0.90   0.000
    [I%=78.0:S%= 2.00]
*
 ** Reservoir
    OUTFLOW:             0105  1  5.0   83.92    1.19  7.25  62.10  n/a   0.000
*
    DUHYD                0127  1  5.0   83.92    1.19  7.25  62.10  n/a   0.000
       MAJOR SYSTEM:     0127  2  5.0   22.48    0.70  7.25  62.10  n/a   0.000
       MINOR SYSTEM:     0127  3  5.0   61.44    0.49  5.17  62.10  n/a   0.000
*
    READ STORM                 15.0
    [ Ptot= 73.10 mm ]
    fname : C:\Users\pchiocchio\AppData\Local\Temp\a25ec5df-3cf9-4173-b468-dc45d4356e5f\a7a80449-cdd9-4cae-bb04-
    remark: 25 Year 12 Hour AES (Bloor, TRCA)
*
 *  CALIB STANDHYD       0128  1  5.0    3.04    0.22  5.25  53.57 0.73   0.000
    [I%=34.0:S%= 2.00]
*
    ADD [  0127+  0128]  0122  3  5.0   25.52    0.74  7.17  61.08  n/a   0.000
```

```
*
    ADD [  0122+  0080]  0122  1  5.0  101.09    2.01  8.50  54.34  n/a   0.000
*
    CHANNEL[ 2:  0122]   0081  1  5.0  101.09    2.00  8.58  54.34  n/a   0.000
*
    READ STORM                 15.0
    [ Ptot= 73.10 mm ]
    fname : C:\Users\pchiocchio\AppData\Local\Temp\a25ec5df-3cf9-4173-b468-dc45d4356e5f\a7a80449-cdd9-4cae-bb04-
    remark: 25 Year 12 Hour AES (Bloor, TRCA)
*
 ** CALIB STANDHYD       0117  1  5.0    7.94    0.73  5.25  70.13 0.96   0.000
    [I%=93.0:S%= 2.00]
*
    ADD [  0117+  0127]  0035  3  5.0   69.38    1.22  5.25  63.02  n/a   0.000
*
    ADD [  0035+  0081]  0035  1  5.0  170.47    2.53  8.25  57.87  n/a   0.000
*
    CHANNEL[ 2:  0035]   0082  1  5.0  170.47    2.52  8.75  57.85  n/a   0.000
*
    READ STORM                 15.0
    [ Ptot= 73.10 mm ]
    fname : C:\Users\pchiocchio\AppData\Local\Temp\a25ec5df-3cf9-4173-b468-dc45d4356e5f\a7a80449-cdd9-4cae-bb04-
    remark: 25 Year 12 Hour AES (Bloor, TRCA)
*
 ** CALIB NASHYD         0044  1  5.0   24.38    0.34 10.00  52.07 0.71   0.000
    [CN=95.0         ]
    [ N = 2.5:Tp 4.29]
*
    ADD [  0044+  0082]  0056  3  5.0  194.85    2.84  8.92  57.13  n/a   0.000
*
    CHANNEL[ 2:  0056]   0083  1  5.0  194.85    2.84  9.00  57.12  n/a   0.000
*
    READ STORM                 15.0
    [ Ptot= 73.10 mm ]
    fname : C:\Users\pchiocchio\AppData\Local\Temp\a25ec5df-3cf9-4173-b468-dc45d4356e5f\a7a80449-cdd9-4cae-bb04-
    remark: 25 Year 12 Hour AES (Bloor, TRCA)
*
 ** CALIB NASHYD         0043  1  5.0   10.09    0.48  5.75  52.06 0.71   0.000
    [CN=95.0         ]
    [ N = 2.5:Tp 0.81]
*
    READ STORM                 15.0
    [ Ptot= 73.10 mm ]
    fname : C:\Users\pchiocchio\AppData\Local\Temp\a25ec5df-3cf9-4173-b468-dc45d4356e5f\a7a80449-cdd9-4cae-bb04-
    remark: 25 Year 12 Hour AES (Bloor, TRCA)
*
 ** CALIB NASHYD         0045  1  5.0    5.34    0.32  5.50  52.04 0.71   0.000
    [CN=95.0         ]
    [ N = 2.5:Tp 0.56]
*
    ADD [  0043+  0045]  0086  3  5.0   15.43    0.78  5.67  52.05  n/a   0.000
*
    ADD [  0086+  0083]  0086  1  5.0  210.28    2.98  8.67  56.74  n/a   0.000
*
    CHANNEL[ 2:  0086]   0085  1  5.0  210.28    2.97  8.92  56.74  n/a   0.000
*
    READ STORM                 15.0
    [ Ptot= 73.10 mm ]
    fname : C:\Users\pchiocchio\AppData\Local\Temp\a25ec5df-3cf9-4173-b468-dc45d4356e5f\a7a80449-cdd9-4cae-bb04-
    remark: 25 Year 12 Hour AES (Bloor, TRCA)
*
 ** CALIB NASHYD         0042  1  5.0   33.34    1.23  6.33  52.07 0.71   0.000
    [CN=95.0         ]
    [ N = 2.5:Tp 1.21]
*
    READ STORM                 15.0
    [ Ptot= 73.10 mm ]
    fname : C:\Users\pchiocchio\AppData\Local\Temp\a25ec5df-3cf9-4173-b468-dc45d4356e5f\a7a80449-cdd9-4cae-bb04-
    remark: 25 Year 12 Hour AES (Bloor, TRCA)
*
 ** CALIB NASHYD         0046  1  5.0   75.42    1.76  7.75  52.07 0.71   0.000
    [CN=95.0         ]
    [ N = 2.5:Tp 2.29]
*
    ADD [  0042+  0046]  0055  3  5.0  108.76    2.79  7.00  52.07  n/a   0.000
*
    ADD [  0055+  0085]  0055  1  5.0  319.04    5.36  7.92  55.14  n/a   0.000
*
    CHANNEL[ 2:  0055]   0087  1  5.0  319.04    5.35  8.08  55.14  n/a   0.000
*
    READ STORM                 15.0
    [ Ptot= 73.10 mm ]
    fname : C:\Users\pchiocchio\AppData\Local\Temp\a25ec5df-3cf9-4173-b468-dc45d4356e5f\a7a80449-cdd9-4cae-bb04-
    remark: 25 Year 12 Hour AES (Bloor, TRCA)
*
 ** CALIB NASHYD         0006  1  5.0    2.42    0.15  5.42  50.17 0.69   0.000
    [CN=94.0         ]
    [ N = 2.5:Tp 0.50]
*
    READ STORM                 15.0
    [ Ptot= 73.10 mm ]
    fname : C:\Users\pchiocchio\AppData\Local\Temp\a25ec5df-3cf9-4173-b468-dc45d4356e5f\a7a80449-cdd9-4cae-bb04-
    remark: 25 Year 12 Hour AES (Bloor, TRCA)
*
 *  CALIB STANDHYD       0113  1  5.0    0.62    0.05  5.25  58.05 0.79   0.000
```

```
    [I%=50.0:S%= 2.00]
*
    ADD [  0113+  0006]  0131  3  5.0    3.04    0.19  5.25  51.78  n/a   0.000
*
    CHANNEL[ 2:  0131]   0091  1  5.0    3.04    0.17  5.50  51.77  n/a   0.000
*
    READ STORM                 15.0
    [ Ptot= 73.10 mm ]
    fname : C:\Users\pchiocchio\AppData\Local\Temp\a25ec5df-3cf9-4173-b468-dc45d4356e5f\a7a80449-cdd9-4cae-bb04-
    remark: 25 Year 12 Hour AES (Bloor, TRCA)
*
 *  CALIB NASHYD         0008  1  5.0    0.95    0.06  5.42  50.17 0.69   0.000
    [CN=94.0         ]
    [ N = 2.5:Tp 0.52]
*
    READ STORM                 15.0
    [ Ptot= 73.10 mm ]
    fname : C:\Users\pchiocchio\AppData\Local\Temp\a25ec5df-3cf9-4173-b468-dc45d4356e5f\a7a80449-cdd9-4cae-bb04-
    remark: 25 Year 12 Hour AES (Bloor, TRCA)
*
 *  CALIB STANDHYD       0111  1  5.0    0.55    0.04  5.25  58.05 0.79   0.000
    [I%=50.0:S%= 2.00]
*
    READ STORM                 15.0
    [ Ptot= 73.10 mm ]
    fname : C:\Users\pchiocchio\AppData\Local\Temp\a25ec5df-3cf9-4173-b468-dc45d4356e5f\a7a80449-cdd9-4cae-bb04-
    remark: 25 Year 12 Hour AES (Bloor, TRCA)
*
 *  CALIB STANDHYD       0133  1  5.0    1.76    0.15  5.25  61.99 0.85   0.000
    [I%=64.0:S%= 2.00]
*
    ADD [  0111+  0133]  0011  3  5.0    2.31    0.19  5.25  61.05  n/a   0.000
*
    ADD [  0011+  0008]  0011  1  5.0    3.26    0.24  5.25  57.89  n/a   0.000
*
    ADD [  0011+  0091]  0011  3  5.0    6.30    0.39  5.25  54.94  n/a   0.000
*
    CHANNEL[ 2:  0011]   0092  1  5.0    6.30    0.35  5.33  54.93  n/a   0.000
*
    READ STORM                 15.0
    [ Ptot= 73.10 mm ]
    fname : C:\Users\pchiocchio\AppData\Local\Temp\a25ec5df-3cf9-4173-b468-dc45d4356e5f\a7a80449-cdd9-4cae-bb04-
    remark: 25 Year 12 Hour AES (Bloor, TRCA)
*
 *  CALIB NASHYD         0038  1  5.0    7.23    0.24  6.58  50.20 0.69   0.000
    [CN=94.0         ]
    [ N = 2.5:Tp 1.35]
*
    ADD [  0038+  0092]  0052  3  5.0   13.53    0.50  5.67  52.40  n/a   0.000
*
    READ STORM                 15.0
    [ Ptot= 73.10 mm ]
    fname : C:\Users\pchiocchio\AppData\Local\Temp\a25ec5df-3cf9-4173-b468-dc45d4356e5f\a7a80449-cdd9-4cae-bb04-
    remark: 25 Year 12 Hour AES (Bloor, TRCA)
*
 *  CALIB NASHYD         0007  1  5.0    0.22    0.02  5.25  49.46 0.68   0.000
    [CN=94.0         ]
    [ N = 2.5:Tp 0.15]
*
    CHANNEL[ 2:  0007]   0089  1  5.0    0.22    0.02  5.33  49.20  n/a   0.000
*
    READ STORM                 15.0
    [ Ptot= 73.10 mm ]
    fname : C:\Users\pchiocchio\AppData\Local\Temp\a25ec5df-3cf9-4173-b468-dc45d4356e5f\a7a80449-cdd9-4cae-bb04-
    remark: 25 Year 12 Hour AES (Bloor, TRCA)
*
 *  CALIB NASHYD         0009  1  5.0    2.18    0.09  6.00  50.19 0.69   0.000
    [CN=94.0         ]
    [ N = 2.5:Tp 0.94]
*
    READ STORM                 15.0
    [ Ptot= 73.10 mm ]
    fname : C:\Users\pchiocchio\AppData\Local\Temp\a25ec5df-3cf9-4173-b468-dc45d4356e5f\a7a80449-cdd9-4cae-bb04-
    remark: 25 Year 12 Hour AES (Bloor, TRCA)
*
 *  CALIB STANDHYD       0114  1  5.0    0.46    0.04  5.25  58.05 0.79   0.000
    [I%=50.0:S%= 2.00]
*
    READ STORM                 15.0
    [ Ptot= 73.10 mm ]
    fname : C:\Users\pchiocchio\AppData\Local\Temp\a25ec5df-3cf9-4173-b468-dc45d4356e5f\a7a80449-cdd9-4cae-bb04-
    remark: 25 Year 12 Hour AES (Bloor, TRCA)
*
 *  CALIB STANDHYD       0132  1  5.0    1.32    0.11  5.25  61.99 0.85   0.000
    [I%=64.0:S%= 2.00]
*
    ADD [  0114+  0132]  0010  3  5.0    1.79    0.15  5.25  60.96  n/a   0.000
*
    ADD [  0010+  0089]  0010  1  5.0    2.01    0.16  5.25  59.67  n/a   0.000
*
    ADD [  0010+  0009]  0010  3  5.0    4.18    0.22  5.25  54.73  n/a   0.000
*
    READ STORM                 15.0
    [ Ptot= 73.10 mm ]
    fname : C:\Users\pchiocchio\AppData\Local\Temp\a25ec5df-3cf9-4173-b468-dc45d4356e5f\a7a80449-cdd9-4cae-bb04-
```

```
    remark: 25 Year 12 Hour AES (Bloor, TRCA)
*
 *  CALIB NASHYD         0100  1  5.0   14.67    0.32  6.92  36.89 0.50   0.000
    [CN=85.0         ]
    [ N = 2.5:Tp 1.53]
*
    READ STORM                 15.0
    [ Ptot= 73.10 mm ]
    fname : C:\Users\pchiocchio\AppData\Local\Temp\a25ec5df-3cf9-4173-b468-dc45d4356e5f\a7a80449-cdd9-4cae-bb04-
    remark: 25 Year 12 Hour AES (Bloor, TRCA)
*
 *  CALIB NASHYD         0102  1  5.0    0.88    0.02  6.42  36.89 0.50   0.000
    [CN=85.0         ]
    [ N = 2.5:Tp 1.12]
*
    ADD [  0100+  0102]  0136  3  5.0   15.55    0.34  6.92  36.89  n/a   0.000
*
    ADD [  0010+  0136]  0129  3  5.0   19.73    0.45  6.25  40.67  n/a   0.000
*
    CHANNEL[ 2:  0129]   0094  1  5.0   19.73    0.43  6.92  40.67  n/a   0.000
*
    READ STORM                 15.0
    [ Ptot= 73.10 mm ]
    fname : C:\Users\pchiocchio\AppData\Local\Temp\a25ec5df-3cf9-4173-b468-dc45d4356e5f\a7a80449-cdd9-4cae-bb04-
    remark: 25 Year 12 Hour AES (Bloor, TRCA)
*
 *  CALIB NASHYD         0037  1  5.0    9.00    0.25  7.00  50.20 0.69   0.000
    [CN=94.0         ]
    [ N = 2.5:Tp 1.70]
*
    ADD [  0037+  0094]  0053  3  5.0   28.73    0.68  7.00  43.66  n/a   0.000
*
    READ STORM                 15.0
    [ Ptot= 73.10 mm ]
    fname : C:\Users\pchiocchio\AppData\Local\Temp\a25ec5df-3cf9-4173-b468-dc45d4356e5f\a7a80449-cdd9-4cae-bb04-
    remark: 25 Year 12 Hour AES (Bloor, TRCA)
*
 *  CALIB NASHYD         0013  1  5.0    1.42    0.10  5.33  50.11 0.69   0.000
    [CN=94.0         ]
    [ N = 2.5:Tp 0.34]
*
    READ STORM                 15.0
    [ Ptot= 73.10 mm ]
    fname : C:\Users\pchiocchio\AppData\Local\Temp\a25ec5df-3cf9-4173-b468-dc45d4356e5f\a7a80449-cdd9-4cae-bb04-
    remark: 25 Year 12 Hour AES (Bloor, TRCA)
*
 *  CALIB NASHYD         0014  1  5.0    0.93    0.06  5.33  50.14 0.69   0.000
    [CN=94.0         ]
    [ N = 2.5:Tp 0.39]
*
    READ STORM                 15.0
    [ Ptot= 73.10 mm ]
    fname : C:\Users\pchiocchio\AppData\Local\Temp\a25ec5df-3cf9-4173-b468-dc45d4356e5f\a7a80449-cdd9-4cae-bb04-
    remark: 25 Year 12 Hour AES (Bloor, TRCA)
*
 *  CALIB STANDHYD       0109  1  5.0   50.15    4.08  5.25  63.12 0.86   0.000
    [I%=68.0:S%= 2.00]
*
 ** Reservoir
    OUTFLOW:             0110  1  5.0   50.15    0.73  7.00  58.91  n/a   0.000
*
    READ STORM                 15.0
    [ Ptot= 73.10 mm ]
    fname : C:\Users\pchiocchio\AppData\Local\Temp\a25ec5df-3cf9-4173-b468-dc45d4356e5f\a7a80449-cdd9-4cae-bb04-
    remark: 25 Year 12 Hour AES (Bloor, TRCA)
*
 *  CALIB STANDHYD       0115  1  5.0    0.23    0.02  5.25  58.03 0.79   0.000
    [I%=50.0:S%= 2.00]
*
    READ STORM                 15.0
    [ Ptot= 73.10 mm ]
    fname : C:\Users\pchiocchio\AppData\Local\Temp\a25ec5df-3cf9-4173-b468-dc45d4356e5f\a7a80449-cdd9-4cae-bb04-
    remark: 25 Year 12 Hour AES (Bloor, TRCA)
*
 *  CALIB STANDHYD       0116  1  5.0    0.29    0.02  5.25  58.03 0.79   0.000
    [I%=50.0:S%= 2.00]
*
    READ STORM                 15.0
    [ Ptot= 73.10 mm ]
    fname : C:\Users\pchiocchio\AppData\Local\Temp\a25ec5df-3cf9-4173-b468-dc45d4356e5f\a7a80449-cdd9-4cae-bb04-
    remark: 25 Year 12 Hour AES (Bloor, TRCA)
*
 *  CALIB STANDHYD       0134  1  5.0    0.54    0.04  5.25  61.98 0.85   0.000
    [I%=64.0:S%= 2.00]
*
    READ STORM                 15.0
    [ Ptot= 73.10 mm ]
    fname : C:\Users\pchiocchio\AppData\Local\Temp\a25ec5df-3cf9-4173-b468-dc45d4356e5f\a7a80449-cdd9-4cae-bb04-
    remark: 25 Year 12 Hour AES (Bloor, TRCA)
*
 *  CALIB STANDHYD       0135  1  5.0    0.26    0.02  5.25  61.96 0.85   0.000
    [I%=64.0:S%= 2.00]
*
    ADD [  0110+  0115]  0012  3  5.0   50.38    0.74  7.00  58.90  n/a   0.000
*
```

```
    ADD [  0012+  0116]  0012  1  5.0   50.67    0.74  7.00  58.90  n/a   0.000
*
    ADD [  0012+  0013]  0012  3  5.0   52.09    0.77  6.58  58.66  n/a   0.000
*
    ADD [  0012+  0134]  0012  1  5.0   52.63    0.78  6.58  58.69  n/a   0.000
*
    ADD [  0012+  0135]  0012  3  5.0   52.89    0.78  6.50  58.71  n/a   0.000
*
    ADD [  0012+  0014]  0012  1  5.0   53.82    0.81  6.25  58.56  n/a   0.000
*
    CHANNEL[ 2:  0012]   0093  1  5.0   53.82    0.80  6.58  58.54  n/a   0.000
*
    READ STORM                 15.0
    [ Ptot= 73.10 mm ]
    fname : C:\Users\pchiocchio\AppData\Local\Temp\a25ec5df-3cf9-4173-b468-dc45d4356e5f\a7a80449-cdd9-4cae-bb04-
    remark: 25 Year 12 Hour AES (Bloor, TRCA)
*
 *  CALIB NASHYD         0039  1  5.0   13.25    0.43  6.58  50.20 0.69   0.000
    [CN=94.0         ]
    [ N = 2.5:Tp 1.35]
*
    ADD [  0039+  0093]  0051  3  5.0   67.07    1.24  6.58  56.89  n/a   0.000
*
    READ STORM                 15.0
    [ Ptot= 73.10 mm ]
    fname : C:\Users\pchiocchio\AppData\Local\Temp\a25ec5df-3cf9-4173-b468-dc45d4356e5f\a7a80449-cdd9-4cae-bb04-
    remark: 25 Year 12 Hour AES (Bloor, TRCA)
*
 *  CALIB NASHYD         0040  1  5.0    7.26    0.25  6.42  50.20 0.69   0.000
    [CN=94.0         ]
    [ N = 2.5:Tp 1.23]
*
    READ STORM                 15.0
    [ Ptot= 73.10 mm ]
    fname : C:\Users\pchiocchio\AppData\Local\Temp\a25ec5df-3cf9-4173-b468-dc45d4356e5f\a7a80449-cdd9-4cae-bb04-
    remark: 25 Year 12 Hour AES (Bloor, TRCA)
*
 *  CALIB NASHYD         0130  1  5.0    4.10    0.11  6.42  36.89 0.50   0.000
    [CN=85.0         ]
    [ N = 2.5:Tp 1.12]
*
    CHANNEL[ 2:  0130]   0101  1  5.0    4.10    0.10  6.75  36.89  n/a   0.000
*
    ADD [  0101+  0040]  0090  3  5.0   11.36    0.35  6.50  45.39  n/a   0.000
*
    ADD [  0090+  0051]  0090  1  5.0   78.43    1.59  6.50  55.23  n/a   0.000
*
    ADD [  0090+  0052]  0090  3  5.0   91.96    2.04  6.33  54.81  n/a   0.000
*
    ADD [  0090+  0053]  0090  1  5.0  120.69    2.68  6.50  52.16  n/a   0.000
*
    CHANNEL[ 2:  0090]   0095  1  5.0  120.69    2.67  6.67  52.15  n/a   0.000
*
    READ STORM                 15.0
    [ Ptot= 73.10 mm ]
    fname : C:\Users\pchiocchio\AppData\Local\Temp\a25ec5df-3cf9-4173-b468-dc45d4356e5f\a7a80449-cdd9-4cae-bb04-
    remark: 25 Year 12 Hour AES (Bloor, TRCA)
*
 *  CALIB NASHYD         0041  1  5.0   12.70    0.48  6.25  50.20 0.69   0.000
    [CN=94.0         ]
    [ N = 2.5:Tp 1.08]
*
    ADD [  0041+  0095]  0050  3  5.0  133.39    3.13  6.58  51.97  n/a   0.000
*
    READ STORM                 15.0
    [ Ptot= 73.10 mm ]
    fname : C:\Users\pchiocchio\AppData\Local\Temp\a25ec5df-3cf9-4173-b468-dc45d4356e5f\a7a80449-cdd9-4cae-bb04-
    remark: 25 Year 12 Hour AES (Bloor, TRCA)
*
 *  CALIB NASHYD         0047  1  5.0   71.95    1.83  7.42  52.07 0.71   0.000
    [CN=95.0         ]
    [ N = 2.5:Tp 2.04]
*
    ADD [  0047+  0050]  0054  3  5.0  205.34    4.86  6.83  52.00  n/a   0.000
*
    ADD [  0054+  0087]  0054  1  5.0  524.38    9.92  7.33  53.91  n/a   0.000
*
    CHANNEL[ 2:  0054]   0088  1  5.0  524.38    9.90  7.50  53.91  n/a   0.000
*
    READ STORM                 15.0
    [ Ptot= 73.10 mm ]
    fname : C:\Users\pchiocchio\AppData\Local\Temp\a25ec5df-3cf9-4173-b468-dc45d4356e5f\a7a80449-cdd9-4cae-bb04-
    remark: 25 Year 12 Hour AES (Bloor, TRCA)
*
 *  CALIB NASHYD         0048  1  5.0   34.24    1.37  5.75  43.59 0.60   0.000
    [CN=90.0         ]
    [ N = 2.5:Tp 0.77]
*
    ADD [  0048+  0088]  0049  3  5.0  558.62   10.67  7.17  53.28  n/a   0.000
*
    READ STORM                 15.0
    [ Ptot= 73.10 mm ]
    fname : C:\Users\pchiocchio\AppData\Local\Temp\a25ec5df-3cf9-4173-b468-dc45d4356e5f\a7a80449-cdd9-4cae-bb04-
    remark: 25 Year 12 Hour AES (Bloor, TRCA)
*
```

```
 *  CALIB STANDHYD       0118  1  5.0   13.25    1.18  5.25  68.17 0.93   0.000
    [I%=86.0:S%= 2.00]
*
    READ STORM                 15.0
    [ Ptot= 73.10 mm ]
    fname : C:\Users\pchiocchio\AppData\Local\Temp\a25ec5df-3cf9-4173-b468-dc45d4356e5f\a7a80449-cdd9-4cae-bb04-
    remark: 25 Year 12 Hour AES (Bloor, TRCA)
*
 *  CALIB STANDHYD       0123  1  5.0    8.30    0.75  5.25  69.01 0.94   0.000
    [I%=89.0:S%= 2.00]
*
    READ STORM                 15.0
    [ Ptot= 73.10 mm ]
    fname : C:\Users\pchiocchio\AppData\Local\Temp\a25ec5df-3cf9-4173-b468-dc45d4356e5f\a7a80449-cdd9-4cae-bb04-
    remark: 25 Year 12 Hour AES (Bloor, TRCA)
*
 *  CALIB STANDHYD       0125  1  5.0   13.70    1.24  5.25  69.01 0.94   0.000
    [I%=89.0:S%= 2.00]
*
```

```
==========================================================================================

       V    V   I    SSSSS  U   U    A    L             (v 6.2.2001)
       V    V   I    SS     U   U   A A   L
        V  V    I     SS    U   U  AAAAA  L
        V  V    I      SS   U   U  A   A  L
         VV     I    SSSSS  UUUUU  A   A  LLLLL

        OOO   TTTTT  TTTTT  H   H  Y   Y  M   M   OOO    TM
       O   O    T      T    H   H   Y Y   MM MM  O   O
       O   O    T      T    H   H    Y    M   M  O   O
        OOO     T      T    H   H    Y    M   M   OOO
Developed and Distributed by Smart City Water Inc
Copyright 2007 - 2020 Smart City Water Inc
All rights reserved.


                  *****  S U M M A R Y   O U T P U T  *****


  Input   filename: C:\Program Files (x86)\Visual OTTHYMO 6.2\VO2\voin.dat
  Output  filename: C:\Users\pchiocchio\AppData\Local\Civica\VH5\d59fad6f-510d-48b8-a35a-1bee91f156cc\a5c3dc54-4643-4a78-afe9-
842688b03bbd\s
  Summary filename: C:\Users\pchiocchio\AppData\Local\Civica\VH5\d59fad6f-510d-48b8-a35a-1bee91f156cc\a5c3dc54-4643-4a78-afe9-
842688b03bbd\s


DATE: 02/02/2021                          TIME: 05:26:35

USER:


COMMENTS: ____________________________________________________________


  ************************************************
  ** SIMULATION : 50 - Year (6hr AES)           **
  ************************************************

  W/E COMMAND             HYD ID   DT    AREA  ' Qpeak Tpeak   R.V. R.C.   Qbase
                                   min     ha   '  cms   hrs     mm          cms

      START @  0.00 hrs
      --------------------
    READ STORM                 15.0
    [ Ptot= 73.00 mm ]
    fname : C:\Users\pchiocchio\AppData\Local\Temp\a25ec5df-3cf9-4173-b468-dc45d4356e5f\420cc210-d6a1-495b-8e4a-
    remark: 50 Year 6 Hour AES (Bloor, TRCA)
*
 ** CALIB NASHYD         0004  1  5.0   40.84    1.21  4.92  51.97 0.71   0.000
    [CN=95.0         ]
    [ N = 2.5:Tp 2.02]
*
    CHANNEL[ 2:  0004]   0066  1  5.0   40.84    1.10  5.75  51.97  n/a   0.000
*
    READ STORM                 15.0
    [ Ptot= 73.00 mm ]
    fname : C:\Users\pchiocchio\AppData\Local\Temp\a25ec5df-3cf9-4173-b468-dc45d4356e5f\420cc210-d6a1-495b-8e4a-
    remark: 50 Year 6 Hour AES (Bloor, TRCA)
*
 ** CALIB NASHYD         0005  1  5.0   34.73    0.52  7.33  51.97 0.71   0.000
    [CN=95.0         ]
    [ N = 2.5:Tp 4.29]
*
    ADD [  0005+  0066]  0003  3  5.0   75.57    1.57  6.08  51.97  n/a   0.000
*
    PIPE   [ 2:  0003]   0120  1  5.0   75.57    1.57  6.17  51.97  n/a   0.000
*
    CHANNEL[ 2:  0120]   0080  1  5.0   75.57    1.56  6.42  51.97  n/a   0.000
*
    READ STORM                 15.0
    [ Ptot= 73.00 mm ]
    fname : C:\Users\pchiocchio\AppData\Local\Temp\a25ec5df-3cf9-4173-b468-dc45d4356e5f\420cc210-d6a1-495b-8e4a-
    remark: 50 Year 6 Hour AES (Bloor, TRCA)
*
 ** CALIB STANDHYD       0104  1  5.0   83.92   13.43  2.75  65.83 0.90   0.000
    [I%=78.0:S%= 2.00]
*
 ** Reservoir
    OUTFLOW:             0105  1  5.0   83.92    1.41  4.25  62.14  n/a   0.000
*
    DUHYD                0127  1  5.0   83.92    1.41  4.25  62.14  n/a   0.000
       MAJOR SYSTEM:     0127  2  5.0   24.65    0.92  4.25  62.14  n/a   0.000
       MINOR SYSTEM:     0127  3  5.0   59.27    0.49  2.75  62.14  n/a   0.000
*
    READ STORM                 15.0
    [ Ptot= 73.00 mm ]
    fname : C:\Users\pchiocchio\AppData\Local\Temp\a25ec5df-3cf9-4173-b468-dc45d4356e5f\420cc210-d6a1-495b-8e4a-
    remark: 50 Year 6 Hour AES (Bloor, TRCA)
*
 *  CALIB STANDHYD       0128  1  5.0    3.04    0.41  2.75  53.48 0.73   0.000
    [I%=34.0:S%= 2.00]
*
    ADD [  0127+  0128]  0122  3  5.0   27.69    0.97  4.00  61.19  n/a   0.000
```

```
*
    ADD [  0122+  0080]  0122  1  5.0  103.26    2.22  6.00  54.44  n/a   0.000
*
    CHANNEL[ 2:  0122]   0081  1  5.0  103.26    2.22  6.08  54.44  n/a   0.000
*
    READ STORM                 15.0
    [ Ptot= 73.00 mm ]
    fname : C:\Users\pchiocchio\AppData\Local\Temp\a25ec5df-3cf9-4173-b468-dc45d4356e5f\420cc210-d6a1-495b-8e4a-
    remark: 50 Year 6 Hour AES (Bloor, TRCA)
*
 *  CALIB STANDHYD       0117  1  5.0    7.94    1.45  2.75  70.04 0.96   0.000
    [I%=93.0:S%= 2.00]
*
    ADD [  0117+  0127]  0035  3  5.0   67.21    1.93  2.75  63.07  n/a   0.000
*
    ADD [  0035+  0081]  0035  1  5.0  170.47    2.74  6.08  57.85  n/a   0.000
*
    CHANNEL[ 2:  0035]   0082  1  5.0  170.47    2.72  6.25  57.83  n/a   0.000
*
    READ STORM                 15.0
    [ Ptot= 73.00 mm ]
    fname : C:\Users\pchiocchio\AppData\Local\Temp\a25ec5df-3cf9-4173-b468-dc45d4356e5f\420cc210-d6a1-495b-8e4a-
    remark: 50 Year 6 Hour AES (Bloor, TRCA)
*
 *  CALIB NASHYD         0044  1  5.0   24.38    0.37  7.33  51.97 0.71   0.000
    [CN=95.0         ]
    [ N = 2.5:Tp 4.29]
*
    ADD [  0044+  0082]  0056  3  5.0  194.85    3.08  6.33  57.09  n/a   0.000
*
    CHANNEL[ 2:  0056]   0083  1  5.0  194.85    3.07  6.42  57.08  n/a   0.000
*
    READ STORM                 15.0
    [ Ptot= 73.00 mm ]
    fname : C:\Users\pchiocchio\AppData\Local\Temp\a25ec5df-3cf9-4173-b468-dc45d4356e5f\420cc210-d6a1-495b-8e4a-
    remark: 50 Year 6 Hour AES (Bloor, TRCA)
*
 *  CALIB NASHYD         0043  1  5.0   10.09    0.60  3.50  51.96 0.71   0.000
    [CN=95.0         ]
    [ N = 2.5:Tp 0.81]
*
    READ STORM                 15.0
    [ Ptot= 73.00 mm ]
    fname : C:\Users\pchiocchio\AppData\Local\Temp\a25ec5df-3cf9-4173-b468-dc45d4356e5f\420cc210-d6a1-495b-8e4a-
    remark: 50 Year 6 Hour AES (Bloor, TRCA)
*
 *  CALIB NASHYD         0045  1  5.0    5.34    0.41  3.25  51.95 0.71   0.000
    [CN=95.0         ]
    [ N = 2.5:Tp 0.56]
*
    ADD [  0043+  0045]  0086  3  5.0   15.43    1.00  3.42  51.96  n/a   0.000
*
    ADD [  0086+  0083]  0086  1  5.0  210.28    3.19  6.25  56.70  n/a   0.000
*
    CHANNEL[ 2:  0086]   0085  1  5.0  210.28    3.18  6.42  56.70  n/a   0.000
*
    READ STORM                 15.0
    [ Ptot= 73.00 mm ]
    fname : C:\Users\pchiocchio\AppData\Local\Temp\a25ec5df-3cf9-4173-b468-dc45d4356e5f\420cc210-d6a1-495b-8e4a-
    remark: 50 Year 6 Hour AES (Bloor, TRCA)
*
 *  CALIB NASHYD         0042  1  5.0   33.34    1.49  4.08  51.97 0.71   0.000
    [CN=95.0         ]
    [ N = 2.5:Tp 1.21]
*
    READ STORM                 15.0
    [ Ptot= 73.00 mm ]
    fname : C:\Users\pchiocchio\AppData\Local\Temp\a25ec5df-3cf9-4173-b468-dc45d4356e5f\420cc210-d6a1-495b-8e4a-
    remark: 50 Year 6 Hour AES (Bloor, TRCA)
*
 *  CALIB NASHYD         0046  1  5.0   75.42    2.00  5.25  51.97 0.71   0.000
    [CN=95.0         ]
    [ N = 2.5:Tp 2.29]
*
    ADD [  0042+  0046]  0055  3  5.0  108.76    3.27  4.58  51.97  n/a   0.000
*
    ADD [  0055+  0085]  0055  1  5.0  319.04    6.02  5.00  55.08  n/a   0.000
*
    CHANNEL[ 2:  0055]   0087  1  5.0  319.04    6.00  5.17  55.08  n/a   0.000
*
    READ STORM                 15.0
    [ Ptot= 73.00 mm ]
    fname : C:\Users\pchiocchio\AppData\Local\Temp\a25ec5df-3cf9-4173-b468-dc45d4356e5f\420cc210-d6a1-495b-8e4a-
    remark: 50 Year 6 Hour AES (Bloor, TRCA)
*
 *  CALIB NASHYD         0006  1  5.0    2.42    0.19  3.17  50.07 0.69   0.000
    [CN=94.0         ]
    [ N = 2.5:Tp 0.50]
*
    READ STORM                 15.0
    [ Ptot= 73.00 mm ]
    fname : C:\Users\pchiocchio\AppData\Local\Temp\a25ec5df-3cf9-4173-b468-dc45d4356e5f\420cc210-d6a1-495b-8e4a-
    remark: 50 Year 6 Hour AES (Bloor, TRCA)
*
 *  CALIB STANDHYD       0113  1  5.0    0.62    0.09  2.75  57.96 0.79   0.000
```

```
    [I%=50.0:S%= 2.00]
*
    ADD [  0113+  0006]  0131  3  5.0    3.04    0.23  3.08  51.68  n/a   0.000
*
    CHANNEL[ 2:  0131]   0091  1  5.0    3.04    0.22  3.25  51.68  n/a   0.000
*
    READ STORM                 15.0
    [ Ptot= 73.00 mm ]
    fname : C:\Users\pchiocchio\AppData\Local\Temp\a25ec5df-3cf9-4173-b468-dc45d4356e5f\420cc210-d6a1-495b-8e4a-
    remark: 50 Year 6 Hour AES (Bloor, TRCA)
*
 *  CALIB NASHYD         0008  1  5.0    0.95    0.07  3.17  50.07 0.69   0.000
    [CN=94.0         ]
    [ N = 2.5:Tp 0.52]
*
    READ STORM                 15.0
    [ Ptot= 73.00 mm ]
    fname : C:\Users\pchiocchio\AppData\Local\Temp\a25ec5df-3cf9-4173-b468-dc45d4356e5f\420cc210-d6a1-495b-8e4a-
    remark: 50 Year 6 Hour AES (Bloor, TRCA)
*
 *  CALIB STANDHYD       0111  1  5.0    0.55    0.08  2.75  57.96 0.79   0.000
    [I%=50.0:S%= 2.00]
*
    READ STORM                 15.0
    [ Ptot= 73.00 mm ]
    fname : C:\Users\pchiocchio\AppData\Local\Temp\a25ec5df-3cf9-4173-b468-dc45d4356e5f\420cc210-d6a1-495b-8e4a-
    remark: 50 Year 6 Hour AES (Bloor, TRCA)
*
 *  CALIB STANDHYD       0133  1  5.0    1.76    0.28  2.75  61.90 0.85   0.000
    [I%=64.0:S%= 2.00]
*
    ADD [  0111+  0133]  0011  3  5.0    2.31    0.36  2.75  60.96  n/a   0.000
*
    ADD [  0011+  0008]  0011  1  5.0    3.26    0.41  2.75  57.80  n/a   0.000
*
    ADD [  0011+  0091]  0011  3  5.0    6.30    0.55  2.75  54.84  n/a   0.000
*
    CHANNEL[ 2:  0011]   0092  1  5.0    6.30    0.46  2.83  54.83  n/a   0.000
*
    READ STORM                 15.0
    [ Ptot= 73.00 mm ]
    fname : C:\Users\pchiocchio\AppData\Local\Temp\a25ec5df-3cf9-4173-b468-dc45d4356e5f\420cc210-d6a1-495b-8e4a-
    remark: 50 Year 6 Hour AES (Bloor, TRCA)
*
 *  CALIB NASHYD         0038  1  5.0    7.23    0.29  4.25  50.10 0.69   0.000
    [CN=94.0         ]
    [ N = 2.5:Tp 1.35]
*
    ADD [  0038+  0092]  0052  3  5.0   13.53    0.62  3.33  52.30  n/a   0.000
*
    READ STORM                 15.0
    [ Ptot= 73.00 mm ]
    fname : C:\Users\pchiocchio\AppData\Local\Temp\a25ec5df-3cf9-4173-b468-dc45d4356e5f\420cc210-d6a1-495b-8e4a-
    remark: 50 Year 6 Hour AES (Bloor, TRCA)
*
 *  CALIB NASHYD         0007  1  5.0    0.22    0.03  2.75  49.37 0.68   0.000
    [CN=94.0         ]
    [ N = 2.5:Tp 0.15]
*
    CHANNEL[ 2:  0007]   0089  1  5.0    0.22    0.02  2.92  48.80  n/a   0.000
*
    READ STORM                 15.0
    [ Ptot= 73.00 mm ]
    fname : C:\Users\pchiocchio\AppData\Local\Temp\a25ec5df-3cf9-4173-b468-dc45d4356e5f\420cc210-d6a1-495b-8e4a-
    remark: 50 Year 6 Hour AES (Bloor, TRCA)
*
 *  CALIB NASHYD         0009  1  5.0    2.18    0.11  3.75  50.10 0.69   0.000
    [CN=94.0         ]
    [ N = 2.5:Tp 0.94]
*
    READ STORM                 15.0
    [ Ptot= 73.00 mm ]
    fname : C:\Users\pchiocchio\AppData\Local\Temp\a25ec5df-3cf9-4173-b468-dc45d4356e5f\420cc210-d6a1-495b-8e4a-
    remark: 50 Year 6 Hour AES (Bloor, TRCA)
*
 *  CALIB STANDHYD       0114  1  5.0    0.46    0.07  2.75  57.96 0.79   0.000
    [I%=50.0:S%= 2.00]
*
    READ STORM                 15.0
    [ Ptot= 73.00 mm ]
    fname : C:\Users\pchiocchio\AppData\Local\Temp\a25ec5df-3cf9-4173-b468-dc45d4356e5f\420cc210-d6a1-495b-8e4a-
    remark: 50 Year 6 Hour AES (Bloor, TRCA)
*
 *  CALIB STANDHYD       0132  1  5.0    1.32    0.21  2.75  61.90 0.85   0.000
    [I%=64.0:S%= 2.00]
*
    ADD [  0114+  0132]  0010  3  5.0    1.79    0.28  2.75  60.87  n/a   0.000
*
    ADD [  0010+  0089]  0010  1  5.0    2.01    0.30  2.75  59.55  n/a   0.000
*
    ADD [  0010+  0009]  0010  3  5.0    4.18    0.34  2.75  54.63  n/a   0.000
*
    READ STORM                 15.0
    [ Ptot= 73.00 mm ]
    fname : C:\Users\pchiocchio\AppData\Local\Temp\a25ec5df-3cf9-4173-b468-dc45d4356e5f\420cc210-d6a1-495b-8e4a-
```

```
    remark: 50 Year 6 Hour AES (Bloor, TRCA)
*
 *  CALIB NASHYD         0100  1  5.0   14.67    0.38  4.50  36.81 0.50   0.000
    [CN=85.0         ]
    [ N = 2.5:Tp 1.53]
*
    READ STORM                 15.0
    [ Ptot= 73.00 mm ]
    fname : C:\Users\pchiocchio\AppData\Local\Temp\a25ec5df-3cf9-4173-b468-dc45d4356e5f\420cc210-d6a1-495b-8e4a-
    remark: 50 Year 6 Hour AES (Bloor, TRCA)
*
 *  CALIB NASHYD         0102  1  5.0    0.88    0.03  4.00  36.80 0.50   0.000
    [CN=85.0         ]
    [ N = 2.5:Tp 1.12]
*
    ADD [  0100+  0102]  0136  3  5.0   15.55    0.41  4.50  36.81  n/a   0.000
*
    ADD [  0010+  0136]  0129  3  5.0   19.73    0.54  4.25  40.59  n/a   0.000
*
    CHANNEL[ 2:  0129]   0094  1  5.0   19.73    0.52  4.33  40.59  n/a   0.000
*
    READ STORM                 15.0
    [ Ptot= 73.00 mm ]
    fname : C:\Users\pchiocchio\AppData\Local\Temp\a25ec5df-3cf9-4173-b468-dc45d4356e5f\420cc210-d6a1-495b-8e4a-
    remark: 50 Year 6 Hour AES (Bloor, TRCA)
*
 *  CALIB NASHYD         0037  1  5.0    9.00    0.30  4.58  50.10 0.69   0.000
    [CN=94.0         ]
    [ N = 2.5:Tp 1.70]
*
    ADD [  0037+  0094]  0053  3  5.0   28.73    0.82  4.42  43.57  n/a   0.000
*
    READ STORM                 15.0
    [ Ptot= 73.00 mm ]
    fname : C:\Users\pchiocchio\AppData\Local\Temp\a25ec5df-3cf9-4173-b468-dc45d4356e5f\420cc210-d6a1-495b-8e4a-
    remark: 50 Year 6 Hour AES (Bloor, TRCA)
*
 *  CALIB NASHYD         0013  1  5.0    1.42    0.14  2.92  50.02 0.69   0.000
    [CN=94.0         ]
    [ N = 2.5:Tp 0.34]
*
    READ STORM                 15.0
    [ Ptot= 73.00 mm ]
    fname : C:\Users\pchiocchio\AppData\Local\Temp\a25ec5df-3cf9-4173-b468-dc45d4356e5f\420cc210-d6a1-495b-8e4a-
    remark: 50 Year 6 Hour AES (Bloor, TRCA)
*
 *  CALIB NASHYD         0014  1  5.0    0.93    0.09  3.00  50.04 0.69   0.000
    [CN=94.0         ]
    [ N = 2.5:Tp 0.39]
*
    READ STORM                 15.0
    [ Ptot= 73.00 mm ]
    fname : C:\Users\pchiocchio\AppData\Local\Temp\a25ec5df-3cf9-4173-b468-dc45d4356e5f\420cc210-d6a1-495b-8e4a-
    remark: 50 Year 6 Hour AES (Bloor, TRCA)
*
 *  CALIB STANDHYD       0109  1  5.0   50.15    7.61  2.75  63.02 0.86   0.000
    [I%=68.0:S%= 2.00]
*
 ** Reservoir
    OUTFLOW:             0110  1  5.0   50.15    0.85  4.25  58.95  n/a   0.000
*
    READ STORM                 15.0
    [ Ptot= 73.00 mm ]
    fname : C:\Users\pchiocchio\AppData\Local\Temp\a25ec5df-3cf9-4173-b468-dc45d4356e5f\420cc210-d6a1-495b-8e4a-
    remark: 50 Year 6 Hour AES (Bloor, TRCA)
*
 *  CALIB STANDHYD       0115  1  5.0    0.23    0.03  2.75  57.95 0.79   0.000
    [I%=50.0:S%= 2.00]
*
    READ STORM                 15.0
    [ Ptot= 73.00 mm ]
    fname : C:\Users\pchiocchio\AppData\Local\Temp\a25ec5df-3cf9-4173-b468-dc45d4356e5f\420cc210-d6a1-495b-8e4a-
    remark: 50 Year 6 Hour AES (Bloor, TRCA)
*
 *  CALIB STANDHYD       0116  1  5.0    0.29    0.04  2.75  57.95 0.79   0.000
    [I%=50.0:S%= 2.00]
*
    READ STORM                 15.0
    [ Ptot= 73.00 mm ]
    fname : C:\Users\pchiocchio\AppData\Local\Temp\a25ec5df-3cf9-4173-b468-dc45d4356e5f\420cc210-d6a1-495b-8e4a-
    remark: 50 Year 6 Hour AES (Bloor, TRCA)
*
 *  CALIB STANDHYD       0134  1  5.0    0.54    0.09  2.75  61.89 0.85   0.000
    [I%=64.0:S%= 2.00]
*
    READ STORM                 15.0
    [ Ptot= 73.00 mm ]
    fname : C:\Users\pchiocchio\AppData\Local\Temp\a25ec5df-3cf9-4173-b468-dc45d4356e5f\420cc210-d6a1-495b-8e4a-
    remark: 50 Year 6 Hour AES (Bloor, TRCA)
*
 *  CALIB STANDHYD       0135  1  5.0    0.26    0.04  2.75  61.87 0.85   0.000
    [I%=64.0:S%= 2.00]
*
    ADD [  0110+  0115]  0012  3  5.0   50.38    0.85  4.25  58.94  n/a   0.000
*
```

```
    ADD [  0012+  0116]  0012  1  5.0   50.67    0.86  4.25  58.94  n/a   0.000
*
    ADD [  0012+  0013]  0012  3  5.0   52.09    0.91  3.75  58.69  n/a   0.000
*
    ADD [  0012+  0134]  0012  1  5.0   52.63    0.92  3.75  58.73  n/a   0.000
*
    ADD [  0012+  0135]  0012  3  5.0   52.89    0.93  3.75  58.74  n/a   0.000
*
    ADD [  0012+  0014]  0012  1  5.0   53.82    0.99  3.42  58.59  n/a   0.000
*
    CHANNEL[ 2:  0012]   0093  1  5.0   53.82    0.98  3.75  58.57  n/a   0.000
*
    READ STORM                 15.0
    [ Ptot= 73.00 mm ]
    fname : C:\Users\pchiocchio\AppData\Local\Temp\a25ec5df-3cf9-4173-b468-dc45d4356e5f\420cc210-d6a1-495b-8e4a-
    remark: 50 Year 6 Hour AES (Bloor, TRCA)
*
 *  CALIB NASHYD         0039  1  5.0   13.25    0.52  4.25  50.10 0.69   0.000
    [CN=94.0         ]
    [ N = 2.5:Tp 1.35]
*
    ADD [  0039+  0093]  0051  3  5.0   67.07    1.48  4.00  56.90  n/a   0.000
*
    READ STORM                 15.0
    [ Ptot= 73.00 mm ]
    fname : C:\Users\pchiocchio\AppData\Local\Temp\a25ec5df-3cf9-4173-b468-dc45d4356e5f\420cc210-d6a1-495b-8e4a-
    remark: 50 Year 6 Hour AES (Bloor, TRCA)
*
 *  CALIB NASHYD         0040  1  5.0    7.26    0.31  4.08  50.10 0.69   0.000
    [CN=94.0         ]
    [ N = 2.5:Tp 1.23]
*
    READ STORM                 15.0
    [ Ptot= 73.00 mm ]
    fname : C:\Users\pchiocchio\AppData\Local\Temp\a25ec5df-3cf9-4173-b468-dc45d4356e5f\420cc210-d6a1-495b-8e4a-
    remark: 50 Year 6 Hour AES (Bloor, TRCA)
*
 *  CALIB NASHYD         0130  1  5.0    4.10    0.13  4.00  36.81 0.50   0.000
    [CN=85.0         ]
    [ N = 2.5:Tp 1.12]
*
    CHANNEL[ 2:  0130]   0101  1  5.0    4.10    0.13  4.42  36.81  n/a   0.000
*
    ADD [  0101+  0040]  0090  3  5.0   11.36    0.43  4.17  45.30  n/a   0.000
*
    ADD [  0090+  0051]  0090  1  5.0   78.43    1.91  4.08  55.22  n/a   0.000
*
    ADD [  0090+  0052]  0090  3  5.0   91.96    2.46  3.83  54.79  n/a   0.000
*
    ADD [  0090+  0053]  0090  1  5.0  120.69    3.22  4.08  52.12  n/a   0.000
*
    CHANNEL[ 2:  0090]   0095  1  5.0  120.69    3.21  4.25  52.11  n/a   0.000
*
    READ STORM                 15.0
    [ Ptot= 73.00 mm ]
    fname : C:\Users\pchiocchio\AppData\Local\Temp\a25ec5df-3cf9-4173-b468-dc45d4356e5f\420cc210-d6a1-495b-8e4a-
    remark: 50 Year 6 Hour AES (Bloor, TRCA)
*
 *  CALIB NASHYD         0041  1  5.0   12.70    0.59  3.92  50.10 0.69   0.000
    [CN=94.0         ]
    [ N = 2.5:Tp 1.08]
*
    ADD [  0041+  0095]  0050  3  5.0  133.39    3.79  4.17  51.92  n/a   0.000
*
    READ STORM                 15.0
    [ Ptot= 73.00 mm ]
    fname : C:\Users\pchiocchio\AppData\Local\Temp\a25ec5df-3cf9-4173-b468-dc45d4356e5f\420cc210-d6a1-495b-8e4a-
    remark: 50 Year 6 Hour AES (Bloor, TRCA)
*
 *  CALIB NASHYD         0047  1  5.0   71.95    2.11  5.00  51.97 0.71   0.000
    [CN=95.0         ]
    [ N = 2.5:Tp 2.04]
*
    ADD [  0047+  0050]  0054  3  5.0  205.34    5.74  4.42  51.94  n/a   0.000
*
    ADD [  0054+  0087]  0054  1  5.0  524.38   11.60  4.67  53.85  n/a   0.000
*
    CHANNEL[ 2:  0054]   0088  1  5.0  524.38   11.56  4.83  53.85  n/a   0.000
*
    READ STORM                 15.0
    [ Ptot= 73.00 mm ]
    fname : C:\Users\pchiocchio\AppData\Local\Temp\a25ec5df-3cf9-4173-b468-dc45d4356e5f\420cc210-d6a1-495b-8e4a-
    remark: 50 Year 6 Hour AES (Bloor, TRCA)
*
 *  CALIB NASHYD         0048  1  5.0   34.24    1.75  3.50  43.50 0.60   0.000
    [CN=90.0         ]
    [ N = 2.5:Tp 0.77]
*
    ADD [  0048+  0088]  0049  3  5.0  558.62   12.62  4.58  53.21  n/a   0.000
*
    READ STORM                 15.0
    [ Ptot= 73.00 mm ]
    fname : C:\Users\pchiocchio\AppData\Local\Temp\a25ec5df-3cf9-4173-b468-dc45d4356e5f\420cc210-d6a1-495b-8e4a-
    remark: 50 Year 6 Hour AES (Bloor, TRCA)
*
```

```
 *  CALIB STANDHYD       0118  1  5.0   13.25    2.35  2.75  68.07 0.93   0.000
    [I%=86.0:S%= 2.00]
*
    READ STORM                 15.0
    [ Ptot= 73.00 mm ]
    fname : C:\Users\pchiocchio\AppData\Local\Temp\a25ec5df-3cf9-4173-b468-dc45d4356e5f\420cc210-d6a1-495b-8e4a-
    remark: 50 Year 6 Hour AES (Bloor, TRCA)
*
 *  CALIB STANDHYD       0123  1  5.0    8.30    1.49  2.75  68.91 0.94   0.000
    [I%=89.0:S%= 2.00]
*
    READ STORM                 15.0
    [ Ptot= 73.00 mm ]
    fname : C:\Users\pchiocchio\AppData\Local\Temp\a25ec5df-3cf9-4173-b468-dc45d4356e5f\420cc210-d6a1-495b-8e4a-
    remark: 50 Year 6 Hour AES (Bloor, TRCA)
*
 *  CALIB STANDHYD       0125  1  5.0   13.70    2.45  2.75  68.91 0.94   0.000
    [I%=89.0:S%= 2.00]
*
```

```
==========================================================================================

       V    V   I    SSSSS  U   U    A    L             (v 6.2.2001)
       V    V   I    SS     U   U   A A   L
        V  V    I     SS    U   U  AAAAA  L
        V  V    I      SS   U   U  A   A  L
         VV     I    SSSSS  UUUUU  A   A  LLLLL

        OOO   TTTTT  TTTTT  H   H  Y   Y  M   M   OOO    TM
       O   O    T      T    H   H   Y Y   MM MM  O   O
       O   O    T      T    H   H    Y    M   M  O   O
        OOO     T      T    H   H    Y    M   M   OOO
Developed and Distributed by Smart City Water Inc
Copyright 2007 - 2020 Smart City Water Inc
All rights reserved.


                  *****  S U M M A R Y   O U T P U T  *****


  Input   filename: C:\Program Files (x86)\Visual OTTHYMO 6.2\VO2\voin.dat
  Output  filename: C:\Users\pchiocchio\AppData\Local\Civica\VH5\d59fad6f-510d-48b8-a35a-1bee91f156cc\41696128-f5cf-46e8-9ef8-
17ca3f73c6db\s
  Summary filename: C:\Users\pchiocchio\AppData\Local\Civica\VH5\d59fad6f-510d-48b8-a35a-1bee91f156cc\41696128-f5cf-46e8-9ef8-
17ca3f73c6db\s


DATE: 02/02/2021                          TIME: 05:26:32

USER:


COMMENTS: ____________________________________________________________


  ************************************************
  ** SIMULATION : 50 - Year (12hr AES)          **
  ************************************************

  W/E COMMAND             HYD ID   DT    AREA  ' Qpeak Tpeak   R.V. R.C.   Qbase
                                   min     ha   '  cms   hrs     mm          cms

      START @  0.00 hrs
      --------------------
    READ STORM                 15.0
    [ Ptot= 80.82 mm ]
    fname : C:\Users\pchiocchio\AppData\Local\Temp\a25ec5df-3cf9-4173-b468-dc45d4356e5f\9d9aed76-16fc-4a0a-9fef-
    remark: 50 Year 12 Hour AES (Bloor, TRCA)
*
 ** CALIB NASHYD         0004  1  5.0   40.84    1.20  7.33  59.57 0.74   0.000
    [CN=95.0         ]
    [ N = 2.5:Tp 2.02]
*
    CHANNEL[ 2:  0004]   0066  1  5.0   40.84    1.11  8.17  59.57  n/a   0.000
*
    READ STORM                 15.0
    [ Ptot= 80.82 mm ]
    fname : C:\Users\pchiocchio\AppData\Local\Temp\a25ec5df-3cf9-4173-b468-dc45d4356e5f\9d9aed76-16fc-4a0a-9fef-
    remark: 50 Year 12 Hour AES (Bloor, TRCA)
*
 ** CALIB NASHYD         0005  1  5.0   34.73    0.56  9.92  59.57 0.74   0.000
    [CN=95.0         ]
    [ N = 2.5:Tp 4.29]
*
    ADD [  0005+  0066]  0003  3  5.0   75.57    1.62  8.58  59.57  n/a   0.000
*
    PIPE   [ 2:  0003]   0120  1  5.0   75.57    1.62  8.67  59.57  n/a   0.000
*
    CHANNEL[ 2:  0120]   0080  1  5.0   75.57    1.60  8.92  59.57  n/a   0.000
*
    READ STORM                 15.0
    [ Ptot= 80.82 mm ]
    fname : C:\Users\pchiocchio\AppData\Local\Temp\a25ec5df-3cf9-4173-b468-dc45d4356e5f\9d9aed76-16fc-4a0a-9fef-
    remark: 50 Year 12 Hour AES (Bloor, TRCA)
*
 ** CALIB STANDHYD       0104  1  5.0   83.92    7.88  5.25  73.41 0.91   0.000
    [I%=78.0:S%= 2.00]
*
 ** Reservoir
    OUTFLOW:             0105  1  5.0   83.92    1.39  7.00  69.55  n/a   0.000
*
    DUHYD                0127  1  5.0   83.92    1.39  7.00  69.55  n/a   0.000
       MAJOR SYSTEM:     0127  2  5.0   26.93    0.90  7.00  69.55  n/a   0.000
       MINOR SYSTEM:     0127  3  5.0   56.99    0.49  5.00  69.55  n/a   0.000
*
    READ STORM                 15.0
    [ Ptot= 80.82 mm ]
    fname : C:\Users\pchiocchio\AppData\Local\Temp\a25ec5df-3cf9-4173-b468-dc45d4356e5f\9d9aed76-16fc-4a0a-9fef-
    remark: 50 Year 12 Hour AES (Bloor, TRCA)
*
 *  CALIB STANDHYD       0128  1  5.0    3.04    0.25  5.25  60.58 0.75   0.000
    [I%=34.0:S%= 2.00]
*
    ADD [  0127+  0128]  0122  3  5.0   29.97    0.95  6.83  68.64  n/a   0.000
```

```
*
    ADD [  0122+  0080]  0122  1  5.0  105.54    2.40  8.42  62.15  n/a   0.000
*
    CHANNEL[ 2:  0122]   0081  1  5.0  105.54    2.40  8.50  62.15  n/a   0.000
*
    READ STORM                 15.0
    [ Ptot= 80.82 mm ]
    fname : C:\Users\pchiocchio\AppData\Local\Temp\a25ec5df-3cf9-4173-b468-dc45d4356e5f\9d9aed76-16fc-4a0a-9fef-
    remark: 50 Year 12 Hour AES (Bloor, TRCA)
*
 ** CALIB STANDHYD       0117  1  5.0    7.94    0.81  5.25  77.78 0.96   0.000
    [I%=93.0:S%= 2.00]
*
    ADD [  0117+  0127]  0035  3  5.0   64.93    1.29  5.25  70.55  n/a   0.000
*
    ADD [  0035+  0081]  0035  1  5.0  170.47    2.94  8.25  65.35  n/a   0.000
*
    CHANNEL[ 2:  0035]   0082  1  5.0  170.47    2.91  8.67  65.33  n/a   0.000
*
    READ STORM                 15.0
    [ Ptot= 80.82 mm ]
    fname : C:\Users\pchiocchio\AppData\Local\Temp\a25ec5df-3cf9-4173-b468-dc45d4356e5f\9d9aed76-16fc-4a0a-9fef-
    remark: 50 Year 12 Hour AES (Bloor, TRCA)
*
 ** CALIB NASHYD         0044  1  5.0   24.38    0.39  9.92  59.57 0.74   0.000
    [CN=95.0         ]
    [ N = 2.5:Tp 4.29]
*
    ADD [  0044+  0082]  0056  3  5.0  194.85    3.29  8.83  64.61  n/a   0.000
*
    CHANNEL[ 2:  0056]   0083  1  5.0  194.85    3.28  9.00  64.60  n/a   0.000
*
    READ STORM                 15.0
    [ Ptot= 80.82 mm ]
    fname : C:\Users\pchiocchio\AppData\Local\Temp\a25ec5df-3cf9-4173-b468-dc45d4356e5f\9d9aed76-16fc-4a0a-9fef-
    remark: 50 Year 12 Hour AES (Bloor, TRCA)
*
 ** CALIB NASHYD         0043  1  5.0   10.09    0.55  5.75  59.56 0.74   0.000
    [CN=95.0         ]
    [ N = 2.5:Tp 0.81]
*
    READ STORM                 15.0
    [ Ptot= 80.82 mm ]
    fname : C:\Users\pchiocchio\AppData\Local\Temp\a25ec5df-3cf9-4173-b468-dc45d4356e5f\9d9aed76-16fc-4a0a-9fef-
    remark: 50 Year 12 Hour AES (Bloor, TRCA)
*
 ** CALIB NASHYD         0045  1  5.0    5.34    0.36  5.50  59.55 0.74   0.000
    [CN=95.0         ]
    [ N = 2.5:Tp 0.56]
*
    ADD [  0043+  0045]  0086  3  5.0   15.43    0.90  5.58  59.56  n/a   0.000
*
    ADD [  0086+  0083]  0086  1  5.0  210.28    3.44  8.67  64.23  n/a   0.000
*
    CHANNEL[ 2:  0086]   0085  1  5.0  210.28    3.44  8.83  64.22  n/a   0.000
*
    READ STORM                 15.0
    [ Ptot= 80.82 mm ]
    fname : C:\Users\pchiocchio\AppData\Local\Temp\a25ec5df-3cf9-4173-b468-dc45d4356e5f\9d9aed76-16fc-4a0a-9fef-
    remark: 50 Year 12 Hour AES (Bloor, TRCA)
*
 ** CALIB NASHYD         0042  1  5.0   33.34    1.40  6.33  59.57 0.74   0.000
    [CN=95.0         ]
    [ N = 2.5:Tp 1.21]
*
    READ STORM                 15.0
    [ Ptot= 80.82 mm ]
    fname : C:\Users\pchiocchio\AppData\Local\Temp\a25ec5df-3cf9-4173-b468-dc45d4356e5f\9d9aed76-16fc-4a0a-9fef-
    remark: 50 Year 12 Hour AES (Bloor, TRCA)
*
 ** CALIB NASHYD         0046  1  5.0   75.42    2.02  7.67  59.57 0.74   0.000
    [CN=95.0         ]
    [ N = 2.5:Tp 2.29]
*
    ADD [  0042+  0046]  0055  3  5.0  108.76    3.19  7.00  59.57  n/a   0.000
*
    ADD [  0055+  0085]  0055  1  5.0  319.04    6.24  7.75  62.63  n/a   0.000
*
    CHANNEL[ 2:  0055]   0087  1  5.0  319.04    6.22  7.92  62.63  n/a   0.000
*
    READ STORM                 15.0
    [ Ptot= 80.82 mm ]
    fname : C:\Users\pchiocchio\AppData\Local\Temp\a25ec5df-3cf9-4173-b468-dc45d4356e5f\9d9aed76-16fc-4a0a-9fef-
    remark: 50 Year 12 Hour AES (Bloor, TRCA)
*
 ** CALIB NASHYD         0006  1  5.0    2.42    0.17  5.42  57.59 0.71   0.000
    [CN=94.0         ]
    [ N = 2.5:Tp 0.50]
*
    READ STORM                 15.0
    [ Ptot= 80.82 mm ]
    fname : C:\Users\pchiocchio\AppData\Local\Temp\a25ec5df-3cf9-4173-b468-dc45d4356e5f\9d9aed76-16fc-4a0a-9fef-
    remark: 50 Year 12 Hour AES (Bloor, TRCA)
*
 *  CALIB STANDHYD       0113  1  5.0    0.62    0.06  5.25  65.24 0.81   0.000
```

```
    [I%=50.0:S%= 2.00]
*
    ADD [  0113+  0006]  0131  3  5.0    3.04    0.22  5.25  59.15  n/a   0.000
*
    CHANNEL[ 2:  0131]   0091  1  5.0    3.04    0.19  5.42  59.14  n/a   0.000
*
    READ STORM                 15.0
    [ Ptot= 80.82 mm ]
    fname : C:\Users\pchiocchio\AppData\Local\Temp\a25ec5df-3cf9-4173-b468-dc45d4356e5f\9d9aed76-16fc-4a0a-9fef-
    remark: 50 Year 12 Hour AES (Bloor, TRCA)
*
 *  CALIB NASHYD         0008  1  5.0    0.95    0.06  5.42  57.59 0.71   0.000
    [CN=94.0         ]
    [ N = 2.5:Tp 0.52]
*
    READ STORM                 15.0
    [ Ptot= 80.82 mm ]
    fname : C:\Users\pchiocchio\AppData\Local\Temp\a25ec5df-3cf9-4173-b468-dc45d4356e5f\9d9aed76-16fc-4a0a-9fef-
    remark: 50 Year 12 Hour AES (Bloor, TRCA)
*
 *  CALIB STANDHYD       0111  1  5.0    0.55    0.05  5.25  65.24 0.81   0.000
    [I%=50.0:S%= 2.00]
*
    READ STORM                 15.0
    [ Ptot= 80.82 mm ]
    fname : C:\Users\pchiocchio\AppData\Local\Temp\a25ec5df-3cf9-4173-b468-dc45d4356e5f\9d9aed76-16fc-4a0a-9fef-
    remark: 50 Year 12 Hour AES (Bloor, TRCA)
*
 *  CALIB STANDHYD       0133  1  5.0    1.76    0.16  5.25  69.32 0.86   0.000
    [I%=64.0:S%= 2.00]
*
    ADD [  0111+  0133]  0011  3  5.0    2.31    0.21  5.25  68.35  n/a   0.000
*
    ADD [  0011+  0008]  0011  1  5.0    3.26    0.27  5.25  65.22  n/a   0.000
*
    ADD [  0011+  0091]  0011  3  5.0    6.30    0.46  5.25  62.29  n/a   0.000
*
    CHANNEL[ 2:  0011]   0092  1  5.0    6.30    0.41  5.33  62.28  n/a   0.000
*
    READ STORM                 15.0
    [ Ptot= 80.82 mm ]
    fname : C:\Users\pchiocchio\AppData\Local\Temp\a25ec5df-3cf9-4173-b468-dc45d4356e5f\9d9aed76-16fc-4a0a-9fef-
    remark: 50 Year 12 Hour AES (Bloor, TRCA)
*
 *  CALIB NASHYD         0038  1  5.0    7.23    0.27  6.50  57.62 0.71   0.000
    [CN=94.0         ]
    [ N = 2.5:Tp 1.35]
*
    ADD [  0038+  0092]  0052  3  5.0   13.53    0.57  5.50  59.79  n/a   0.000
*
    READ STORM                 15.0
    [ Ptot= 80.82 mm ]
    fname : C:\Users\pchiocchio\AppData\Local\Temp\a25ec5df-3cf9-4173-b468-dc45d4356e5f\9d9aed76-16fc-4a0a-9fef-
    remark: 50 Year 12 Hour AES (Bloor, TRCA)
*
 *  CALIB NASHYD         0007  1  5.0    0.22    0.02  5.25  56.78 0.70   0.000
    [CN=94.0         ]
    [ N = 2.5:Tp 0.15]
*
    CHANNEL[ 2:  0007]   0089  1  5.0    0.22    0.02  5.33  56.48  n/a   0.000
*
    READ STORM                 15.0
    [ Ptot= 80.82 mm ]
    fname : C:\Users\pchiocchio\AppData\Local\Temp\a25ec5df-3cf9-4173-b468-dc45d4356e5f\9d9aed76-16fc-4a0a-9fef-
    remark: 50 Year 12 Hour AES (Bloor, TRCA)
*
 *  CALIB NASHYD         0009  1  5.0    2.18    0.10  5.92  57.62 0.71   0.000
    [CN=94.0         ]
    [ N = 2.5:Tp 0.94]
*
    READ STORM                 15.0
    [ Ptot= 80.82 mm ]
    fname : C:\Users\pchiocchio\AppData\Local\Temp\a25ec5df-3cf9-4173-b468-dc45d4356e5f\9d9aed76-16fc-4a0a-9fef-
    remark: 50 Year 12 Hour AES (Bloor, TRCA)
*
 *  CALIB STANDHYD       0114  1  5.0    0.46    0.04  5.25  65.23 0.81   0.000
    [I%=50.0:S%= 2.00]
*
    READ STORM                 15.0
    [ Ptot= 80.82 mm ]
    fname : C:\Users\pchiocchio\AppData\Local\Temp\a25ec5df-3cf9-4173-b468-dc45d4356e5f\9d9aed76-16fc-4a0a-9fef-
    remark: 50 Year 12 Hour AES (Bloor, TRCA)
*
 *  CALIB STANDHYD       0132  1  5.0    1.32    0.12  5.25  69.32 0.86   0.000
    [I%=64.0:S%= 2.00]
*
    ADD [  0114+  0132]  0010  3  5.0    1.79    0.16  5.25  68.26  n/a   0.000
*
    ADD [  0010+  0089]  0010  1  5.0    2.01    0.18  5.25  66.96  n/a   0.000
*
    ADD [  0010+  0009]  0010  3  5.0    4.18    0.26  5.25  62.10  n/a   0.000
*
    READ STORM                 15.0
    [ Ptot= 80.82 mm ]
    fname : C:\Users\pchiocchio\AppData\Local\Temp\a25ec5df-3cf9-4173-b468-dc45d4356e5f\9d9aed76-16fc-4a0a-9fef-
```

```
    remark: 50 Year 12 Hour AES (Bloor, TRCA)
*
 *  CALIB NASHYD         0100  1  5.0   14.67    0.37  6.92  43.37 0.54   0.000
    [CN=85.0         ]
    [ N = 2.5:Tp 1.53]
*
    READ STORM                 15.0
    [ Ptot= 80.82 mm ]
    fname : C:\Users\pchiocchio\AppData\Local\Temp\a25ec5df-3cf9-4173-b468-dc45d4356e5f\9d9aed76-16fc-4a0a-9fef-
    remark: 50 Year 12 Hour AES (Bloor, TRCA)
*
 *  CALIB NASHYD         0102  1  5.0    0.88    0.03  6.33  43.36 0.54   0.000
    [CN=85.0         ]
    [ N = 2.5:Tp 1.12]
*
    ADD [  0100+  0102]  0136  3  5.0   15.55    0.40  6.83  43.37  n/a   0.000
*
    ADD [  0010+  0136]  0129  3  5.0   19.73    0.53  6.25  47.34  n/a   0.000
*
    CHANNEL[ 2:  0129]   0094  1  5.0   19.73    0.51  6.75  47.34  n/a   0.000
*
    READ STORM                 15.0
    [ Ptot= 80.82 mm ]
    fname : C:\Users\pchiocchio\AppData\Local\Temp\a25ec5df-3cf9-4173-b468-dc45d4356e5f\9d9aed76-16fc-4a0a-9fef-
    remark: 50 Year 12 Hour AES (Bloor, TRCA)
*
 *  CALIB NASHYD         0037  1  5.0    9.00    0.29  7.00  57.63 0.71   0.000
    [CN=94.0         ]
    [ N = 2.5:Tp 1.70]
*
    ADD [  0037+  0094]  0053  3  5.0   28.73    0.80  6.83  50.56  n/a   0.000
*
    READ STORM                 15.0
    [ Ptot= 80.82 mm ]
    fname : C:\Users\pchiocchio\AppData\Local\Temp\a25ec5df-3cf9-4173-b468-dc45d4356e5f\9d9aed76-16fc-4a0a-9fef-
    remark: 50 Year 12 Hour AES (Bloor, TRCA)
*
 *  CALIB NASHYD         0013  1  5.0    1.42    0.12  5.25  57.53 0.71   0.000
    [CN=94.0         ]
    [ N = 2.5:Tp 0.34]
*
    READ STORM                 15.0
    [ Ptot= 80.82 mm ]
    fname : C:\Users\pchiocchio\AppData\Local\Temp\a25ec5df-3cf9-4173-b468-dc45d4356e5f\9d9aed76-16fc-4a0a-9fef-
    remark: 50 Year 12 Hour AES (Bloor, TRCA)
*
 *  CALIB NASHYD         0014  1  5.0    0.93    0.07  5.33  57.56 0.71   0.000
    [CN=94.0         ]
    [ N = 2.5:Tp 0.39]
*
    READ STORM                 15.0
    [ Ptot= 80.82 mm ]
    fname : C:\Users\pchiocchio\AppData\Local\Temp\a25ec5df-3cf9-4173-b468-dc45d4356e5f\9d9aed76-16fc-4a0a-9fef-
    remark: 50 Year 12 Hour AES (Bloor, TRCA)
*
 *  CALIB STANDHYD       0109  1  5.0   50.15    4.56  5.25  70.50 0.87   0.000
    [I%=68.0:S%= 2.00]
*
 ** Reservoir
    OUTFLOW:             0110  1  5.0   50.15    0.84  6.92  66.25  n/a   0.000
*
    READ STORM                 15.0
    [ Ptot= 80.82 mm ]
    fname : C:\Users\pchiocchio\AppData\Local\Temp\a25ec5df-3cf9-4173-b468-dc45d4356e5f\9d9aed76-16fc-4a0a-9fef-
    remark: 50 Year 12 Hour AES (Bloor, TRCA)
*
 *  CALIB STANDHYD       0115  1  5.0    0.23    0.02  5.25  65.21 0.81   0.000
    [I%=50.0:S%= 2.00]
*
    READ STORM                 15.0
    [ Ptot= 80.82 mm ]
    fname : C:\Users\pchiocchio\AppData\Local\Temp\a25ec5df-3cf9-4173-b468-dc45d4356e5f\9d9aed76-16fc-4a0a-9fef-
    remark: 50 Year 12 Hour AES (Bloor, TRCA)
*
 *  CALIB STANDHYD       0116  1  5.0    0.29    0.03  5.25  65.22 0.81   0.000
    [I%=50.0:S%= 2.00]
*
    READ STORM                 15.0
    [ Ptot= 80.82 mm ]
    fname : C:\Users\pchiocchio\AppData\Local\Temp\a25ec5df-3cf9-4173-b468-dc45d4356e5f\9d9aed76-16fc-4a0a-9fef-
    remark: 50 Year 12 Hour AES (Bloor, TRCA)
*
 *  CALIB STANDHYD       0134  1  5.0    0.54    0.05  5.25  69.32 0.86   0.000
    [I%=64.0:S%= 2.00]
*
    READ STORM                 15.0
    [ Ptot= 80.82 mm ]
    fname : C:\Users\pchiocchio\AppData\Local\Temp\a25ec5df-3cf9-4173-b468-dc45d4356e5f\9d9aed76-16fc-4a0a-9fef-
    remark: 50 Year 12 Hour AES (Bloor, TRCA)
*
 *  CALIB STANDHYD       0135  1  5.0    0.26    0.02  5.25  69.29 0.86   0.000
    [I%=64.0:S%= 2.00]
*
    ADD [  0110+  0115]  0012  3  5.0   50.38    0.84  6.92  66.24  n/a   0.000
*
```

```
    ADD [  0012+  0116]  0012  1  5.0   50.67    0.85  6.83  66.24  n/a   0.000
*
    ADD [  0012+  0013]  0012  3  5.0   52.09    0.88  6.50  66.00  n/a   0.000
*
    ADD [  0012+  0134]  0012  1  5.0   52.63    0.89  6.25  66.04  n/a   0.000
*
    ADD [  0012+  0135]  0012  3  5.0   52.89    0.90  6.25  66.05  n/a   0.000
*
    ADD [  0012+  0014]  0012  1  5.0   53.82    0.93  6.25  65.90  n/a   0.000
*
    CHANNEL[ 2:  0012]   0093  1  5.0   53.82    0.93  6.33  65.89  n/a   0.000
*
    READ STORM                 15.0
    [ Ptot= 80.82 mm ]
    fname : C:\Users\pchiocchio\AppData\Local\Temp\a25ec5df-3cf9-4173-b468-dc45d4356e5f\9d9aed76-16fc-4a0a-9fef-
    remark: 50 Year 12 Hour AES (Bloor, TRCA)
*
 *  CALIB NASHYD         0039  1  5.0   13.25    0.50  6.50  57.62 0.71   0.000
    [CN=94.0         ]
    [ N = 2.5:Tp 1.35]
*
    ADD [  0039+  0093]  0051  3  5.0   67.07    1.43  6.42  64.25  n/a   0.000
*
    READ STORM                 15.0
    [ Ptot= 80.82 mm ]
    fname : C:\Users\pchiocchio\AppData\Local\Temp\a25ec5df-3cf9-4173-b468-dc45d4356e5f\9d9aed76-16fc-4a0a-9fef-
    remark: 50 Year 12 Hour AES (Bloor, TRCA)
*
 *  CALIB NASHYD         0040  1  5.0    7.26    0.29  6.42  57.62 0.71   0.000
    [CN=94.0         ]
    [ N = 2.5:Tp 1.23]
*
    READ STORM                 15.0
    [ Ptot= 80.82 mm ]
    fname : C:\Users\pchiocchio\AppData\Local\Temp\a25ec5df-3cf9-4173-b468-dc45d4356e5f\9d9aed76-16fc-4a0a-9fef-
    remark: 50 Year 12 Hour AES (Bloor, TRCA)
*
 *  CALIB NASHYD         0130  1  5.0    4.10    0.13  6.33  43.37 0.54   0.000
    [CN=85.0         ]
    [ N = 2.5:Tp 1.12]
*
    CHANNEL[ 2:  0130]   0101  1  5.0    4.10    0.12  6.75  43.37  n/a   0.000
*
    ADD [  0101+  0040]  0090  3  5.0   11.36    0.41  6.50  52.48  n/a   0.000
*
    ADD [  0090+  0051]  0090  1  5.0   78.43    1.84  6.50  62.55  n/a   0.000
*
    ADD [  0090+  0052]  0090  3  5.0   91.96    2.35  6.25  62.14  n/a   0.000
*
    ADD [  0090+  0053]  0090  1  5.0  120.69    3.11  6.42  59.38  n/a   0.000
*
    CHANNEL[ 2:  0090]   0095  1  5.0  120.69    3.11  6.58  59.38  n/a   0.000
*
    READ STORM                 15.0
    [ Ptot= 80.82 mm ]
    fname : C:\Users\pchiocchio\AppData\Local\Temp\a25ec5df-3cf9-4173-b468-dc45d4356e5f\9d9aed76-16fc-4a0a-9fef-
    remark: 50 Year 12 Hour AES (Bloor, TRCA)
*
 *  CALIB NASHYD         0041  1  5.0   12.70    0.55  6.17  57.62 0.71   0.000
    [CN=94.0         ]
    [ N = 2.5:Tp 1.08]
*
    ADD [  0041+  0095]  0050  3  5.0  133.39    3.64  6.50  59.21  n/a   0.000
*
    READ STORM                 15.0
    [ Ptot= 80.82 mm ]
    fname : C:\Users\pchiocchio\AppData\Local\Temp\a25ec5df-3cf9-4173-b468-dc45d4356e5f\9d9aed76-16fc-4a0a-9fef-
    remark: 50 Year 12 Hour AES (Bloor, TRCA)
*
 *  CALIB NASHYD         0047  1  5.0   71.95    2.10  7.42  59.57 0.74   0.000
    [CN=95.0         ]
    [ N = 2.5:Tp 2.04]
*
    ADD [  0047+  0050]  0054  3  5.0  205.34    5.59  6.75  59.34  n/a   0.000
*
    ADD [  0054+  0087]  0054  1  5.0  524.38   11.48  7.33  61.34  n/a   0.000
*
    CHANNEL[ 2:  0054]   0088  1  5.0  524.38   11.47  7.42  61.34  n/a   0.000
*
    READ STORM                 15.0
    [ Ptot= 80.82 mm ]
    fname : C:\Users\pchiocchio\AppData\Local\Temp\a25ec5df-3cf9-4173-b468-dc45d4356e5f\9d9aed76-16fc-4a0a-9fef-
    remark: 50 Year 12 Hour AES (Bloor, TRCA)
*
 *  CALIB NASHYD         0048  1  5.0   34.24    1.60  5.75  50.63 0.63   0.000
    [CN=90.0         ]
    [ N = 2.5:Tp 0.77]
*
    ADD [  0048+  0088]  0049  3  5.0  558.62   12.35  7.08  60.68  n/a   0.000
*
    READ STORM                 15.0
    [ Ptot= 80.82 mm ]
    fname : C:\Users\pchiocchio\AppData\Local\Temp\a25ec5df-3cf9-4173-b468-dc45d4356e5f\9d9aed76-16fc-4a0a-9fef-
    remark: 50 Year 12 Hour AES (Bloor, TRCA)
*
```

```
 *  CALIB STANDHYD       0118  1  5.0   13.25    1.31  5.25  75.74 0.94   0.000
    [I%=86.0:S%= 2.00]
*
    READ STORM                 15.0
    [ Ptot= 80.82 mm ]
    fname : C:\Users\pchiocchio\AppData\Local\Temp\a25ec5df-3cf9-4173-b468-dc45d4356e5f\9d9aed76-16fc-4a0a-9fef-
    remark: 50 Year 12 Hour AES (Bloor, TRCA)
*
 *  CALIB STANDHYD       0123  1  5.0    8.30    0.83  5.25  76.61 0.95   0.000
    [I%=89.0:S%= 2.00]
*
    READ STORM                 15.0
    [ Ptot= 80.82 mm ]
    fname : C:\Users\pchiocchio\AppData\Local\Temp\a25ec5df-3cf9-4173-b468-dc45d4356e5f\9d9aed76-16fc-4a0a-9fef-
    remark: 50 Year 12 Hour AES (Bloor, TRCA)
*
 *  CALIB STANDHYD       0125  1  5.0   13.70    1.37  5.25  76.61 0.95   0.000
    [I%=89.0:S%= 2.00]
*
```

```
==========================================================================================

       V    V   I    SSSSS  U   U    A    L             (v 6.2.2001)
       V    V   I    SS     U   U   A A   L
        V  V    I     SS    U   U  AAAAA  L
        V  V    I      SS   U   U  A   A  L
         VV     I    SSSSS  UUUUU  A   A  LLLLL

        OOO   TTTTT  TTTTT  H   H  Y   Y  M   M   OOO    TM
       O   O    T      T    H   H   Y Y   MM MM  O   O
       O   O    T      T    H   H    Y    M   M  O   O
        OOO     T      T    H   H    Y    M   M   OOO
Developed and Distributed by Smart City Water Inc
Copyright 2007 - 2020 Smart City Water Inc
All rights reserved.


                  *****  S U M M A R Y   O U T P U T  *****


  Input   filename: C:\Program Files (x86)\Visual OTTHYMO 6.2\VO2\voin.dat
  Output  filename: C:\Users\pchiocchio\AppData\Local\Civica\VH5\d59fad6f-510d-48b8-a35a-1bee91f156cc\b8b0b694-bb69-4491-bfb5-
e9e42f518635\s
  Summary filename: C:\Users\pchiocchio\AppData\Local\Civica\VH5\d59fad6f-510d-48b8-a35a-1bee91f156cc\b8b0b694-bb69-4491-bfb5-
e9e42f518635\s


DATE: 02/02/2021                          TIME: 05:26:37

USER:


COMMENTS: ____________________________________________________________


  ************************************************
  ** SIMULATION : 100 - Year (6hr AES)          **
  ************************************************

  W/E COMMAND             HYD ID   DT    AREA  ' Qpeak Tpeak   R.V. R.C.   Qbase
                                   min     ha   '  cms   hrs     mm          cms

      START @  0.00 hrs
      --------------------
    READ STORM                 15.0
    [ Ptot= 80.31 mm ]
    fname : C:\Users\pchiocchio\AppData\Local\Temp\a25ec5df-3cf9-4173-b468-dc45d4356e5f\ba356ae5-c789-48ed-9922-
    remark: 100 Year 6 Hour AES (Bloor, TRCA)
*
 ** CALIB NASHYD         0004  1  5.0   40.84    1.38  4.92  59.08 0.74   0.000
    [CN=95.0         ]
    [ N = 2.5:Tp 2.02]
*
    CHANNEL[ 2:  0004]   0066  1  5.0   40.84    1.25  5.75  59.08  n/a   0.000
*
    READ STORM                 15.0
    [ Ptot= 80.31 mm ]
    fname : C:\Users\pchiocchio\AppData\Local\Temp\a25ec5df-3cf9-4173-b468-dc45d4356e5f\ba356ae5-c789-48ed-9922-
    remark: 100 Year 6 Hour AES (Bloor, TRCA)
*
 ** CALIB NASHYD         0005  1  5.0   34.73    0.60  7.25  59.08 0.74   0.000
    [CN=95.0         ]
    [ N = 2.5:Tp 4.29]
*
    ADD [  0005+  0066]  0003  3  5.0   75.57    1.79  6.00  59.08  n/a   0.000
*
    PIPE   [ 2:  0003]   0120  1  5.0   75.57    1.79  6.08  59.08  n/a   0.000
*
    CHANNEL[ 2:  0120]   0080  1  5.0   75.57    1.78  6.33  59.08  n/a   0.000
*
    READ STORM                 15.0
    [ Ptot= 80.31 mm ]
    fname : C:\Users\pchiocchio\AppData\Local\Temp\a25ec5df-3cf9-4173-b468-dc45d4356e5f\ba356ae5-c789-48ed-9922-
    remark: 100 Year 6 Hour AES (Bloor, TRCA)
*
 ** CALIB STANDHYD       0104  1  5.0   83.92   15.11  2.75  72.91 0.91   0.000
    [I%=78.0:S%= 2.00]
*
 ** Reservoir
    OUTFLOW:             0105  1  5.0   83.92    1.60  4.17  69.19  n/a   0.000
*
    DUHYD                0127  1  5.0   83.92    1.60  4.17  69.19  n/a   0.000
       MAJOR SYSTEM:     0127  2  5.0   28.66    1.12  4.17  69.19  n/a   0.000
       MINOR SYSTEM:     0127  3  5.0   55.26    0.49  2.67  69.19  n/a   0.000
*
    READ STORM                 15.0
    [ Ptot= 80.31 mm ]
    fname : C:\Users\pchiocchio\AppData\Local\Temp\a25ec5df-3cf9-4173-b468-dc45d4356e5f\ba356ae5-c789-48ed-9922-
    remark: 100 Year 6 Hour AES (Bloor, TRCA)
*
 *  CALIB STANDHYD       0128  1  5.0    3.04    0.46  2.75  60.12 0.75   0.000
    [I%=34.0:S%= 2.00]
*
    ADD [  0127+  0128]  0122  3  5.0   31.70    1.18  3.75  68.32  n/a   0.000
```

```
*
    ADD [  0122+  0080]  0122  1  5.0  107.27    2.63  5.92  61.81  n/a   0.000
*
    CHANNEL[ 2:  0122]   0081  1  5.0  107.27    2.63  6.00  61.81  n/a   0.000
*
    READ STORM                 15.0
    [ Ptot= 80.31 mm ]
    fname : C:\Users\pchiocchio\AppData\Local\Temp\a25ec5df-3cf9-4173-b468-dc45d4356e5f\ba356ae5-c789-48ed-9922-
    remark: 100 Year 6 Hour AES (Bloor, TRCA)
*
 *  CALIB STANDHYD       0117  1  5.0    7.94    1.60  2.75  77.27 0.96   0.000
    [I%=93.0:S%= 2.00]
*
    ADD [  0117+  0127]  0035  3  5.0   63.20    2.08  2.75  70.21  n/a   0.000
*
    ADD [  0035+  0081]  0035  1  5.0  170.47    3.15  6.00  64.92  n/a   0.000
*
    CHANNEL[ 2:  0035]   0082  1  5.0  170.47    3.13  6.25  64.90  n/a   0.000
*
    READ STORM                 15.0
    [ Ptot= 80.31 mm ]
    fname : C:\Users\pchiocchio\AppData\Local\Temp\a25ec5df-3cf9-4173-b468-dc45d4356e5f\ba356ae5-c789-48ed-9922-
    remark: 100 Year 6 Hour AES (Bloor, TRCA)
*
 *  CALIB NASHYD         0044  1  5.0   24.38    0.42  7.25  59.08 0.74   0.000
    [CN=95.0         ]
    [ N = 2.5:Tp 4.29]
*
    ADD [  0044+  0082]  0056  3  5.0  194.85    3.53  6.33  64.17  n/a   0.000
*
    CHANNEL[ 2:  0056]   0083  1  5.0  194.85    3.52  6.42  64.16  n/a   0.000
*
    READ STORM                 15.0
    [ Ptot= 80.31 mm ]
    fname : C:\Users\pchiocchio\AppData\Local\Temp\a25ec5df-3cf9-4173-b468-dc45d4356e5f\ba356ae5-c789-48ed-9922-
    remark: 100 Year 6 Hour AES (Bloor, TRCA)
*
 *  CALIB NASHYD         0043  1  5.0   10.09    0.69  3.50  59.07 0.74   0.000
    [CN=95.0         ]
    [ N = 2.5:Tp 0.81]
*
    READ STORM                 15.0
    [ Ptot= 80.31 mm ]
    fname : C:\Users\pchiocchio\AppData\Local\Temp\a25ec5df-3cf9-4173-b468-dc45d4356e5f\ba356ae5-c789-48ed-9922-
    remark: 100 Year 6 Hour AES (Bloor, TRCA)
*
 *  CALIB NASHYD         0045  1  5.0    5.34    0.47  3.25  59.05 0.74   0.000
    [CN=95.0         ]
    [ N = 2.5:Tp 0.56]
*
    ADD [  0043+  0045]  0086  3  5.0   15.43    1.13  3.42  59.06  n/a   0.000
*
    ADD [  0086+  0083]  0086  1  5.0  210.28    3.65  6.33  63.79  n/a   0.000
*
    CHANNEL[ 2:  0086]   0085  1  5.0  210.28    3.64  6.42  63.78  n/a   0.000
*
    READ STORM                 15.0
    [ Ptot= 80.31 mm ]
    fname : C:\Users\pchiocchio\AppData\Local\Temp\a25ec5df-3cf9-4173-b468-dc45d4356e5f\ba356ae5-c789-48ed-9922-
    remark: 100 Year 6 Hour AES (Bloor, TRCA)
*
 *  CALIB NASHYD         0042  1  5.0   33.34    1.70  4.00  59.07 0.74   0.000
    [CN=95.0         ]
    [ N = 2.5:Tp 1.21]
*
    READ STORM                 15.0
    [ Ptot= 80.31 mm ]
    fname : C:\Users\pchiocchio\AppData\Local\Temp\a25ec5df-3cf9-4173-b468-dc45d4356e5f\ba356ae5-c789-48ed-9922-
    remark: 100 Year 6 Hour AES (Bloor, TRCA)
*
 *  CALIB NASHYD         0046  1  5.0   75.42    2.28  5.25  59.08 0.74   0.000
    [CN=95.0         ]
    [ N = 2.5:Tp 2.29]
*
    ADD [  0042+  0046]  0055  3  5.0  108.76    3.72  4.58  59.08  n/a   0.000
*
    ADD [  0055+  0085]  0055  1  5.0  319.04    6.93  4.92  62.17  n/a   0.000
*
    CHANNEL[ 2:  0055]   0087  1  5.0  319.04    6.91  5.08  62.17  n/a   0.000
*
    READ STORM                 15.0
    [ Ptot= 80.31 mm ]
    fname : C:\Users\pchiocchio\AppData\Local\Temp\a25ec5df-3cf9-4173-b468-dc45d4356e5f\ba356ae5-c789-48ed-9922-
    remark: 100 Year 6 Hour AES (Bloor, TRCA)
*
 *  CALIB NASHYD         0006  1  5.0    2.42    0.22  3.17  57.10 0.71   0.000
    [CN=94.0         ]
    [ N = 2.5:Tp 0.50]
*
    READ STORM                 15.0
    [ Ptot= 80.31 mm ]
    fname : C:\Users\pchiocchio\AppData\Local\Temp\a25ec5df-3cf9-4173-b468-dc45d4356e5f\ba356ae5-c789-48ed-9922-
    remark: 100 Year 6 Hour AES (Bloor, TRCA)
*
 *  CALIB STANDHYD       0113  1  5.0    0.62    0.10  2.75  64.76 0.81   0.000
```

```
    [I%=50.0:S%= 2.00]
*
    ADD [  0113+  0006]  0131  3  5.0    3.04    0.26  2.75  58.66  n/a   0.000
*
    CHANNEL[ 2:  0131]   0091  1  5.0    3.04    0.26  3.17  58.66  n/a   0.000
*
    READ STORM                 15.0
    [ Ptot= 80.31 mm ]
    fname : C:\Users\pchiocchio\AppData\Local\Temp\a25ec5df-3cf9-4173-b468-dc45d4356e5f\ba356ae5-c789-48ed-9922-
    remark: 100 Year 6 Hour AES (Bloor, TRCA)
*
 *  CALIB NASHYD         0008  1  5.0    0.95    0.08  3.17  57.10 0.71   0.000
    [CN=94.0         ]
    [ N = 2.5:Tp 0.52]
*
    READ STORM                 15.0
    [ Ptot= 80.31 mm ]
    fname : C:\Users\pchiocchio\AppData\Local\Temp\a25ec5df-3cf9-4173-b468-dc45d4356e5f\ba356ae5-c789-48ed-9922-
    remark: 100 Year 6 Hour AES (Bloor, TRCA)
*
 *  CALIB STANDHYD       0111  1  5.0    0.55    0.09  2.75  64.76 0.81   0.000
    [I%=50.0:S%= 2.00]
*
    READ STORM                 15.0
    [ Ptot= 80.31 mm ]
    fname : C:\Users\pchiocchio\AppData\Local\Temp\a25ec5df-3cf9-4173-b468-dc45d4356e5f\ba356ae5-c789-48ed-9922-
    remark: 100 Year 6 Hour AES (Bloor, TRCA)
*
 *  CALIB STANDHYD       0133  1  5.0    1.76    0.31  2.75  68.84 0.86   0.000
    [I%=64.0:S%= 2.00]
*
    ADD [  0111+  0133]  0011  3  5.0    2.31    0.40  2.75  67.86  n/a   0.000
*
    ADD [  0011+  0008]  0011  1  5.0    3.26    0.46  2.75  64.74  n/a   0.000
*
    ADD [  0011+  0091]  0011  3  5.0    6.30    0.63  2.75  61.80  n/a   0.000
*
    CHANNEL[ 2:  0011]   0092  1  5.0    6.30    0.54  2.83  61.79  n/a   0.000
*
    READ STORM                 15.0
    [ Ptot= 80.31 mm ]
    fname : C:\Users\pchiocchio\AppData\Local\Temp\a25ec5df-3cf9-4173-b468-dc45d4356e5f\ba356ae5-c789-48ed-9922-
    remark: 100 Year 6 Hour AES (Bloor, TRCA)
*
 *  CALIB NASHYD         0038  1  5.0    7.23    0.33  4.25  57.13 0.71   0.000
    [CN=94.0         ]
    [ N = 2.5:Tp 1.35]
*
    ADD [  0038+  0092]  0052  3  5.0   13.53    0.71  3.25  59.30  n/a   0.000
*
    READ STORM                 15.0
    [ Ptot= 80.31 mm ]
    fname : C:\Users\pchiocchio\AppData\Local\Temp\a25ec5df-3cf9-4173-b468-dc45d4356e5f\ba356ae5-c789-48ed-9922-
    remark: 100 Year 6 Hour AES (Bloor, TRCA)
*
 *  CALIB NASHYD         0007  1  5.0    0.22    0.04  2.75  56.29 0.70   0.000
    [CN=94.0         ]
    [ N = 2.5:Tp 0.15]
*
    CHANNEL[ 2:  0007]   0089  1  5.0    0.22    0.03  2.92  55.68  n/a   0.000
*
    READ STORM                 15.0
    [ Ptot= 80.31 mm ]
    fname : C:\Users\pchiocchio\AppData\Local\Temp\a25ec5df-3cf9-4173-b468-dc45d4356e5f\ba356ae5-c789-48ed-9922-
    remark: 100 Year 6 Hour AES (Bloor, TRCA)
*
 *  CALIB NASHYD         0009  1  5.0    2.18    0.13  3.75  57.13 0.71   0.000
    [CN=94.0         ]
    [ N = 2.5:Tp 0.94]
*
    READ STORM                 15.0
    [ Ptot= 80.31 mm ]
    fname : C:\Users\pchiocchio\AppData\Local\Temp\a25ec5df-3cf9-4173-b468-dc45d4356e5f\ba356ae5-c789-48ed-9922-
    remark: 100 Year 6 Hour AES (Bloor, TRCA)
*
 *  CALIB STANDHYD       0114  1  5.0    0.46    0.08  2.75  64.76 0.81   0.000
    [I%=50.0:S%= 2.00]
*
    READ STORM                 15.0
    [ Ptot= 80.31 mm ]
    fname : C:\Users\pchiocchio\AppData\Local\Temp\a25ec5df-3cf9-4173-b468-dc45d4356e5f\ba356ae5-c789-48ed-9922-
    remark: 100 Year 6 Hour AES (Bloor, TRCA)
*
 *  CALIB STANDHYD       0132  1  5.0    1.32    0.23  2.75  68.84 0.86   0.000
    [I%=64.0:S%= 2.00]
*
    ADD [  0114+  0132]  0010  3  5.0    1.79    0.31  2.75  67.78  n/a   0.000
*
    ADD [  0010+  0089]  0010  1  5.0    2.01    0.33  2.75  66.45  n/a   0.000
*
    ADD [  0010+  0009]  0010  3  5.0    4.18    0.39  2.75  61.59  n/a   0.000
*
    READ STORM                 15.0
    [ Ptot= 80.31 mm ]
    fname : C:\Users\pchiocchio\AppData\Local\Temp\a25ec5df-3cf9-4173-b468-dc45d4356e5f\ba356ae5-c789-48ed-9922-
```

```
    remark: 100 Year 6 Hour AES (Bloor, TRCA)
*
 *  CALIB NASHYD         0100  1  5.0   14.67    0.45  4.50  42.94 0.53   0.000
    [CN=85.0         ]
    [ N = 2.5:Tp 1.53]
*
    READ STORM                 15.0
    [ Ptot= 80.31 mm ]
    fname : C:\Users\pchiocchio\AppData\Local\Temp\a25ec5df-3cf9-4173-b468-dc45d4356e5f\ba356ae5-c789-48ed-9922-
    remark: 100 Year 6 Hour AES (Bloor, TRCA)
*
 *  CALIB NASHYD         0102  1  5.0    0.88    0.03  4.00  42.93 0.53   0.000
    [CN=85.0         ]
    [ N = 2.5:Tp 1.12]
*
    ADD [  0100+  0102]  0136  3  5.0   15.55    0.48  4.50  42.93  n/a   0.000
*
    ADD [  0010+  0136]  0129  3  5.0   19.73    0.62  4.25  46.89  n/a   0.000
*
    CHANNEL[ 2:  0129]   0094  1  5.0   19.73    0.60  4.42  46.89  n/a   0.000
*
    READ STORM                 15.0
    [ Ptot= 80.31 mm ]
    fname : C:\Users\pchiocchio\AppData\Local\Temp\a25ec5df-3cf9-4173-b468-dc45d4356e5f\ba356ae5-c789-48ed-9922-
    remark: 100 Year 6 Hour AES (Bloor, TRCA)
*
 *  CALIB NASHYD         0037  1  5.0    9.00    0.34  4.58  57.13 0.71   0.000
    [CN=94.0         ]
    [ N = 2.5:Tp 1.70]
*
    ADD [  0037+  0094]  0053  3  5.0   28.73    0.94  4.50  50.10  n/a   0.000
*
    READ STORM                 15.0
    [ Ptot= 80.31 mm ]
    fname : C:\Users\pchiocchio\AppData\Local\Temp\a25ec5df-3cf9-4173-b468-dc45d4356e5f\ba356ae5-c789-48ed-9922-
    remark: 100 Year 6 Hour AES (Bloor, TRCA)
*
 *  CALIB NASHYD         0013  1  5.0    1.42    0.16  2.92  57.03 0.71   0.000
    [CN=94.0         ]
    [ N = 2.5:Tp 0.34]
*
    READ STORM                 15.0
    [ Ptot= 80.31 mm ]
    fname : C:\Users\pchiocchio\AppData\Local\Temp\a25ec5df-3cf9-4173-b468-dc45d4356e5f\ba356ae5-c789-48ed-9922-
    remark: 100 Year 6 Hour AES (Bloor, TRCA)
*
 *  CALIB NASHYD         0014  1  5.0    0.93    0.10  3.00  57.06 0.71   0.000
    [CN=94.0         ]
    [ N = 2.5:Tp 0.39]
*
    READ STORM                 15.0
    [ Ptot= 80.31 mm ]
    fname : C:\Users\pchiocchio\AppData\Local\Temp\a25ec5df-3cf9-4173-b468-dc45d4356e5f\ba356ae5-c789-48ed-9922-
    remark: 100 Year 6 Hour AES (Bloor, TRCA)
*
 *  CALIB STANDHYD       0109  1  5.0   50.15    8.49  2.75  70.01 0.87   0.000
    [I%=68.0:S%= 2.00]
*
 ** Reservoir
    OUTFLOW:             0110  1  5.0   50.15    0.95  4.25  65.89  n/a   0.000
*
    READ STORM                 15.0
    [ Ptot= 80.31 mm ]
    fname : C:\Users\pchiocchio\AppData\Local\Temp\a25ec5df-3cf9-4173-b468-dc45d4356e5f\ba356ae5-c789-48ed-9922-
    remark: 100 Year 6 Hour AES (Bloor, TRCA)
*
 *  CALIB STANDHYD       0115  1  5.0    0.23    0.04  2.75  64.75 0.81   0.000
    [I%=50.0:S%= 2.00]
*
    READ STORM                 15.0
    [ Ptot= 80.31 mm ]
    fname : C:\Users\pchiocchio\AppData\Local\Temp\a25ec5df-3cf9-4173-b468-dc45d4356e5f\ba356ae5-c789-48ed-9922-
    remark: 100 Year 6 Hour AES (Bloor, TRCA)
*
 *  CALIB STANDHYD       0116  1  5.0    0.29    0.05  2.75  64.76 0.81   0.000
    [I%=50.0:S%= 2.00]
*
    READ STORM                 15.0
    [ Ptot= 80.31 mm ]
    fname : C:\Users\pchiocchio\AppData\Local\Temp\a25ec5df-3cf9-4173-b468-dc45d4356e5f\ba356ae5-c789-48ed-9922-
    remark: 100 Year 6 Hour AES (Bloor, TRCA)
*
 *  CALIB STANDHYD       0134  1  5.0    0.54    0.10  2.75  68.83 0.86   0.000
    [I%=64.0:S%= 2.00]
*
    READ STORM                 15.0
    [ Ptot= 80.31 mm ]
    fname : C:\Users\pchiocchio\AppData\Local\Temp\a25ec5df-3cf9-4173-b468-dc45d4356e5f\ba356ae5-c789-48ed-9922-
    remark: 100 Year 6 Hour AES (Bloor, TRCA)
*
 *  CALIB STANDHYD       0135  1  5.0    0.26    0.05  2.75  68.82 0.86   0.000
    [I%=64.0:S%= 2.00]
*
    ADD [  0110+  0115]  0012  3  5.0   50.38    0.96  4.25  65.89  n/a   0.000
*
```

```
    ADD [  0012+  0116]  0012  1  5.0   50.67    0.96  4.25  65.88  n/a   0.000
*
    ADD [  0012+  0013]  0012  3  5.0   52.09    1.02  3.75  65.64  n/a   0.000
*
    ADD [  0012+  0134]  0012  1  5.0   52.63    1.04  3.75  65.67  n/a   0.000
*
    ADD [  0012+  0135]  0012  3  5.0   52.89    1.05  3.75  65.69  n/a   0.000
*
    ADD [  0012+  0014]  0012  1  5.0   53.82    1.13  3.25  65.54  n/a   0.000
*
    CHANNEL[ 2:  0012]   0093  1  5.0   53.82    1.11  3.58  65.52  n/a   0.000
*
    READ STORM                 15.0
    [ Ptot= 80.31 mm ]
    fname : C:\Users\pchiocchio\AppData\Local\Temp\a25ec5df-3cf9-4173-b468-dc45d4356e5f\ba356ae5-c789-48ed-9922-
    remark: 100 Year 6 Hour AES (Bloor, TRCA)
*
 *  CALIB NASHYD         0039  1  5.0   13.25    0.60  4.25  57.13 0.71   0.000
    [CN=94.0         ]
    [ N = 2.5:Tp 1.35]
*
    ADD [  0039+  0093]  0051  3  5.0   67.07    1.67  3.92  63.86  n/a   0.000
*
    READ STORM                 15.0
    [ Ptot= 80.31 mm ]
    fname : C:\Users\pchiocchio\AppData\Local\Temp\a25ec5df-3cf9-4173-b468-dc45d4356e5f\ba356ae5-c789-48ed-9922-
    remark: 100 Year 6 Hour AES (Bloor, TRCA)
*
 *  CALIB NASHYD         0040  1  5.0    7.26    0.35  4.08  57.13 0.71   0.000
    [CN=94.0         ]
    [ N = 2.5:Tp 1.23]
*
    READ STORM                 15.0
    [ Ptot= 80.31 mm ]
    fname : C:\Users\pchiocchio\AppData\Local\Temp\a25ec5df-3cf9-4173-b468-dc45d4356e5f\ba356ae5-c789-48ed-9922-
    remark: 100 Year 6 Hour AES (Bloor, TRCA)
*
 *  CALIB NASHYD         0130  1  5.0    4.10    0.16  4.00  42.93 0.53   0.000
    [CN=85.0         ]
    [ N = 2.5:Tp 1.12]
*
    CHANNEL[ 2:  0130]   0101  1  5.0    4.10    0.15  4.42  42.93  n/a   0.000
*
    ADD [  0101+  0040]  0090  3  5.0   11.36    0.50  4.17  52.01  n/a   0.000
*
    ADD [  0090+  0051]  0090  1  5.0   78.43    2.17  4.08  62.15  n/a   0.000
*
    ADD [  0090+  0052]  0090  3  5.0   91.96    2.80  3.83  61.73  n/a   0.000
*
    ADD [  0090+  0053]  0090  1  5.0  120.69    3.67  4.00  58.96  n/a   0.000
*
    CHANNEL[ 2:  0090]   0095  1  5.0  120.69    3.66  4.17  58.95  n/a   0.000
*
    READ STORM                 15.0
    [ Ptot= 80.31 mm ]
    fname : C:\Users\pchiocchio\AppData\Local\Temp\a25ec5df-3cf9-4173-b468-dc45d4356e5f\ba356ae5-c789-48ed-9922-
    remark: 100 Year 6 Hour AES (Bloor, TRCA)
*
 *  CALIB NASHYD         0041  1  5.0   12.70    0.68  3.92  57.13 0.71   0.000
    [CN=94.0         ]
    [ N = 2.5:Tp 1.08]
*
    ADD [  0041+  0095]  0050  3  5.0  133.39    4.33  4.08  58.78  n/a   0.000
*
    READ STORM                 15.0
    [ Ptot= 80.31 mm ]
    fname : C:\Users\pchiocchio\AppData\Local\Temp\a25ec5df-3cf9-4173-b468-dc45d4356e5f\ba356ae5-c789-48ed-9922-
    remark: 100 Year 6 Hour AES (Bloor, TRCA)
*
 *  CALIB NASHYD         0047  1  5.0   71.95    2.40  4.92  59.08 0.74   0.000
    [CN=95.0         ]
    [ N = 2.5:Tp 2.04]
*
    ADD [  0047+  0050]  0054  3  5.0  205.34    6.53  4.42  58.88  n/a   0.000
*
    ADD [  0054+  0087]  0054  1  5.0  524.38   13.28  4.67  60.88  n/a   0.000
*
    CHANNEL[ 2:  0054]   0088  1  5.0  524.38   13.24  4.83  60.88  n/a   0.000
*
    READ STORM                 15.0
    [ Ptot= 80.31 mm ]
    fname : C:\Users\pchiocchio\AppData\Local\Temp\a25ec5df-3cf9-4173-b468-dc45d4356e5f\ba356ae5-c789-48ed-9922-
    remark: 100 Year 6 Hour AES (Bloor, TRCA)
*
 *  CALIB NASHYD         0048  1  5.0   34.24    2.03  3.50  50.16 0.62   0.000
    [CN=90.0         ]
    [ N = 2.5:Tp 0.77]
*
    ADD [  0048+  0088]  0049  3  5.0  558.62   14.46  4.50  60.22  n/a   0.000
*
    READ STORM                 15.0
    [ Ptot= 80.31 mm ]
    fname : C:\Users\pchiocchio\AppData\Local\Temp\a25ec5df-3cf9-4173-b468-dc45d4356e5f\ba356ae5-c789-48ed-9922-
    remark: 100 Year 6 Hour AES (Bloor, TRCA)
*
```

```
 *  CALIB STANDHYD       0118  1  5.0   13.25    2.60  2.75  75.24 0.94   0.000
    [I%=86.0:S%= 2.00]
*
    READ STORM                 15.0
    [ Ptot= 80.31 mm ]
    fname : C:\Users\pchiocchio\AppData\Local\Temp\a25ec5df-3cf9-4173-b468-dc45d4356e5f\ba356ae5-c789-48ed-9922-
    remark: 100 Year 6 Hour AES (Bloor, TRCA)
*
 *  CALIB STANDHYD       0123  1  5.0    8.30    1.65  2.75  76.11 0.95   0.000
    [I%=89.0:S%= 2.00]
*
    READ STORM                 15.0
    [ Ptot= 80.31 mm ]
    fname : C:\Users\pchiocchio\AppData\Local\Temp\a25ec5df-3cf9-4173-b468-dc45d4356e5f\ba356ae5-c789-48ed-9922-
    remark: 100 Year 6 Hour AES (Bloor, TRCA)
*
 *  CALIB STANDHYD       0125  1  5.0   13.70    2.71  2.75  76.11 0.95   0.000
    [I%=89.0:S%= 2.00]
*
```

```
==========================================================================================

       V    V   I    SSSSS  U   U    A    L             (v 6.2.2001)
       V    V   I    SS     U   U   A A   L
        V  V    I     SS    U   U  AAAAA  L
        V  V    I      SS   U   U  A   A  L
         VV     I    SSSSS  UUUUU  A   A  LLLLL

        OOO   TTTTT  TTTTT  H   H  Y   Y  M   M   OOO    TM
       O   O    T      T    H   H   Y Y   MM MM  O   O
       O   O    T      T    H   H    Y    M   M  O   O
        OOO     T      T    H   H    Y    M   M   OOO
Developed and Distributed by Smart City Water Inc
Copyright 2007 - 2020 Smart City Water Inc
All rights reserved.


                  *****  S U M M A R Y   O U T P U T  *****


  Input   filename: C:\Program Files (x86)\Visual OTTHYMO 6.2\VO2\voin.dat
  Output  filename: C:\Users\pchiocchio\AppData\Local\Civica\VH5\d59fad6f-510d-48b8-a35a-1bee91f156cc\9cb8b7cb-6c76-4d79-a7bb-
433f6409c6be\s
  Summary filename: C:\Users\pchiocchio\AppData\Local\Civica\VH5\d59fad6f-510d-48b8-a35a-1bee91f156cc\9cb8b7cb-6c76-4d79-a7bb-
433f6409c6be\s


DATE: 02/02/2021                          TIME: 05:26:34

USER:


COMMENTS: ____________________________________________________________


  ************************************************
  ** SIMULATION : 100 - Year (12hr AES)         **
  ************************************************

  W/E COMMAND             HYD ID   DT    AREA  ' Qpeak Tpeak   R.V. R.C.   Qbase
                                   min     ha   '  cms   hrs     mm          cms

      START @  0.00 hrs
      --------------------
    READ STORM                 15.0
    [ Ptot= 88.54 mm ]
    fname : C:\Users\pchiocchio\AppData\Local\Temp\a25ec5df-3cf9-4173-b468-dc45d4356e5f\c779bf9c-fd49-4135-b6f1-
    remark: 100 Year 12 Hour AES (Bloor, TRCA)
*
 ** CALIB NASHYD         0004  1  5.0   40.84    1.35  7.33  67.11 0.76   0.000
    [CN=95.0         ]
    [ N = 2.5:Tp 2.02]
*
    CHANNEL[ 2:  0004]   0066  1  5.0   40.84    1.26  8.17  67.11  n/a   0.000
*
    READ STORM                 15.0
    [ Ptot= 88.54 mm ]
    fname : C:\Users\pchiocchio\AppData\Local\Temp\a25ec5df-3cf9-4173-b468-dc45d4356e5f\c779bf9c-fd49-4135-b6f1-
    remark: 100 Year 12 Hour AES (Bloor, TRCA)
*
 ** CALIB NASHYD         0005  1  5.0   34.73    0.63  9.92  67.12 0.76   0.000
    [CN=95.0         ]
    [ N = 2.5:Tp 4.29]
*
    ADD [  0005+  0066]  0003  3  5.0   75.57    1.83  8.50  67.11  n/a   0.000
*
    PIPE   [ 2:  0003]   0120  1  5.0   75.57    1.83  8.58  67.11  n/a   0.000
*
    CHANNEL[ 2:  0120]   0080  1  5.0   75.57    1.81  8.83  67.11  n/a   0.000
*
    READ STORM                 15.0
    [ Ptot= 88.54 mm ]
    fname : C:\Users\pchiocchio\AppData\Local\Temp\a25ec5df-3cf9-4173-b468-dc45d4356e5f\c779bf9c-fd49-4135-b6f1-
    remark: 100 Year 12 Hour AES (Bloor, TRCA)
*
 ** CALIB STANDHYD       0104  1  5.0   83.92    8.72  5.25  80.92 0.91   0.000
    [I%=78.0:S%= 2.00]
*
 ** Reservoir
    OUTFLOW:             0105  1  5.0   83.92    1.57  6.83  77.03  n/a   0.000
*
    DUHYD                0127  1  5.0   83.92    1.57  6.83  77.03  n/a   0.000
       MAJOR SYSTEM:     0127  2  5.0   30.73    1.08  6.83  77.03  n/a   0.000
       MINOR SYSTEM:     0127  3  5.0   53.19    0.49  4.83  77.03  n/a   0.000
*
    READ STORM                 15.0
    [ Ptot= 88.54 mm ]
    fname : C:\Users\pchiocchio\AppData\Local\Temp\a25ec5df-3cf9-4173-b468-dc45d4356e5f\c779bf9c-fd49-4135-b6f1-
    remark: 100 Year 12 Hour AES (Bloor, TRCA)
*
 *  CALIB STANDHYD       0128  1  5.0    3.04    0.28  5.25  67.68 0.76   0.000
    [I%=34.0:S%= 2.00]
*
    ADD [  0127+  0128]  0122  3  5.0   33.77    1.14  6.50  76.19  n/a   0.000
```

```
*
    ADD [  0122+  0080]  0122  1  5.0  109.34    2.79  8.33  69.92  n/a   0.000
*
    CHANNEL[ 2:  0122]   0081  1  5.0  109.34    2.79  8.42  69.92  n/a   0.000
*
    READ STORM                 15.0
    [ Ptot= 88.54 mm ]
    fname : C:\Users\pchiocchio\AppData\Local\Temp\a25ec5df-3cf9-4173-b468-dc45d4356e5f\c779bf9c-fd49-4135-b6f1-
    remark: 100 Year 12 Hour AES (Bloor, TRCA)
*
 ** CALIB STANDHYD       0117  1  5.0    7.94    0.88  5.25  85.43 0.96   0.000
    [I%=93.0:S%= 2.00]
*
    ADD [  0117+  0127]  0035  3  5.0   61.13    1.37  5.25  78.12  n/a   0.000
*
    ADD [  0035+  0081]  0035  1  5.0  170.47    3.35  8.25  72.86  n/a   0.000
*
    CHANNEL[ 2:  0035]   0082  1  5.0  170.47    3.31  8.58  72.84  n/a   0.000
*
    READ STORM                 15.0
    [ Ptot= 88.54 mm ]
    fname : C:\Users\pchiocchio\AppData\Local\Temp\a25ec5df-3cf9-4173-b468-dc45d4356e5f\c779bf9c-fd49-4135-b6f1-
    remark: 100 Year 12 Hour AES (Bloor, TRCA)
*
 ** CALIB NASHYD         0044  1  5.0   24.38    0.44  9.92  67.12 0.76   0.000
    [CN=95.0         ]
    [ N = 2.5:Tp 4.29]
*
    ADD [  0044+  0082]  0056  3  5.0  194.85    3.73  8.75  72.12  n/a   0.000
*
    CHANNEL[ 2:  0056]   0083  1  5.0  194.85    3.72  8.92  72.11  n/a   0.000
*
    READ STORM                 15.0
    [ Ptot= 88.54 mm ]
    fname : C:\Users\pchiocchio\AppData\Local\Temp\a25ec5df-3cf9-4173-b468-dc45d4356e5f\c779bf9c-fd49-4135-b6f1-
    remark: 100 Year 12 Hour AES (Bloor, TRCA)
*
 ** CALIB NASHYD         0043  1  5.0   10.09    0.62  5.75  67.10 0.76   0.000
    [CN=95.0         ]
    [ N = 2.5:Tp 0.81]
*
    READ STORM                 15.0
    [ Ptot= 88.54 mm ]
    fname : C:\Users\pchiocchio\AppData\Local\Temp\a25ec5df-3cf9-4173-b468-dc45d4356e5f\c779bf9c-fd49-4135-b6f1-
    remark: 100 Year 12 Hour AES (Bloor, TRCA)
*
 ** CALIB NASHYD         0045  1  5.0    5.34    0.41  5.50  67.08 0.76   0.000
    [CN=95.0         ]
    [ N = 2.5:Tp 0.56]
*
    ADD [  0043+  0045]  0086  3  5.0   15.43    1.01  5.58  67.10  n/a   0.000
*
    ADD [  0086+  0083]  0086  1  5.0  210.28    3.91  8.58  71.74  n/a   0.000
*
    CHANNEL[ 2:  0086]   0085  1  5.0  210.28    3.90  8.75  71.73  n/a   0.000
*
    READ STORM                 15.0
    [ Ptot= 88.54 mm ]
    fname : C:\Users\pchiocchio\AppData\Local\Temp\a25ec5df-3cf9-4173-b468-dc45d4356e5f\c779bf9c-fd49-4135-b6f1-
    remark: 100 Year 12 Hour AES (Bloor, TRCA)
*
 ** CALIB NASHYD         0042  1  5.0   33.34    1.58  6.33  67.11 0.76   0.000
    [CN=95.0         ]
    [ N = 2.5:Tp 1.21]
*
    READ STORM                 15.0
    [ Ptot= 88.54 mm ]
    fname : C:\Users\pchiocchio\AppData\Local\Temp\a25ec5df-3cf9-4173-b468-dc45d4356e5f\c779bf9c-fd49-4135-b6f1-
    remark: 100 Year 12 Hour AES (Bloor, TRCA)
*
 ** CALIB NASHYD         0046  1  5.0   75.42    2.27  7.67  67.12 0.76   0.000
    [CN=95.0         ]
    [ N = 2.5:Tp 2.29]
*
    ADD [  0042+  0046]  0055  3  5.0  108.76    3.60  6.92  67.11  n/a   0.000
*
    ADD [  0055+  0085]  0055  1  5.0  319.04    7.06  7.58  70.16  n/a   0.000
*
    CHANNEL[ 2:  0055]   0087  1  5.0  319.04    7.04  7.83  70.15  n/a   0.000
*
    READ STORM                 15.0
    [ Ptot= 88.54 mm ]
    fname : C:\Users\pchiocchio\AppData\Local\Temp\a25ec5df-3cf9-4173-b468-dc45d4356e5f\c779bf9c-fd49-4135-b6f1-
    remark: 100 Year 12 Hour AES (Bloor, TRCA)
*
 ** CALIB NASHYD         0006  1  5.0    2.42    0.19  5.42  65.06 0.73   0.000
    [CN=94.0         ]
    [ N = 2.5:Tp 0.50]
*
    READ STORM                 15.0
    [ Ptot= 88.54 mm ]
    fname : C:\Users\pchiocchio\AppData\Local\Temp\a25ec5df-3cf9-4173-b468-dc45d4356e5f\c779bf9c-fd49-4135-b6f1-
    remark: 100 Year 12 Hour AES (Bloor, TRCA)
*
 *  CALIB STANDHYD       0113  1  5.0    0.62    0.06  5.25  72.48 0.82   0.000
```

```
    [I%=50.0:S%= 2.00]
*
    ADD [  0113+  0006]  0131  3  5.0    3.04    0.24  5.25  66.57  n/a   0.000
*
    CHANNEL[ 2:  0131]   0091  1  5.0    3.04    0.23  5.33  66.57  n/a   0.000
*
    READ STORM                 15.0
    [ Ptot= 88.54 mm ]
    fname : C:\Users\pchiocchio\AppData\Local\Temp\a25ec5df-3cf9-4173-b468-dc45d4356e5f\c779bf9c-fd49-4135-b6f1-
    remark: 100 Year 12 Hour AES (Bloor, TRCA)
*
 *  CALIB NASHYD         0008  1  5.0    0.95    0.07  5.42  65.06 0.73   0.000
    [CN=94.0         ]
    [ N = 2.5:Tp 0.52]
*
    READ STORM                 15.0
    [ Ptot= 88.54 mm ]
    fname : C:\Users\pchiocchio\AppData\Local\Temp\a25ec5df-3cf9-4173-b468-dc45d4356e5f\c779bf9c-fd49-4135-b6f1-
    remark: 100 Year 12 Hour AES (Bloor, TRCA)
*
 *  CALIB STANDHYD       0111  1  5.0    0.55    0.05  5.25  72.48 0.82   0.000
    [I%=50.0:S%= 2.00]
*
    READ STORM                 15.0
    [ Ptot= 88.54 mm ]
    fname : C:\Users\pchiocchio\AppData\Local\Temp\a25ec5df-3cf9-4173-b468-dc45d4356e5f\c779bf9c-fd49-4135-b6f1-
    remark: 100 Year 12 Hour AES (Bloor, TRCA)
*
 *  CALIB STANDHYD       0133  1  5.0    1.76    0.18  5.25  76.70 0.87   0.000
    [I%=64.0:S%= 2.00]
*
    ADD [  0111+  0133]  0011  3  5.0    2.31    0.24  5.25  75.70  n/a   0.000
*
    ADD [  0011+  0008]  0011  1  5.0    3.26    0.30  5.25  72.61  n/a   0.000
*
    ADD [  0011+  0091]  0011  3  5.0    6.30    0.52  5.25  69.69  n/a   0.000
*
    CHANNEL[ 2:  0011]   0092  1  5.0    6.30    0.47  5.33  69.68  n/a   0.000
*
    READ STORM                 15.0
    [ Ptot= 88.54 mm ]
    fname : C:\Users\pchiocchio\AppData\Local\Temp\a25ec5df-3cf9-4173-b468-dc45d4356e5f\c779bf9c-fd49-4135-b6f1-
    remark: 100 Year 12 Hour AES (Bloor, TRCA)
*
 *  CALIB NASHYD         0038  1  5.0    7.23    0.31  6.50  65.10 0.74   0.000
    [CN=94.0         ]
    [ N = 2.5:Tp 1.35]
*
    ADD [  0038+  0092]  0052  3  5.0   13.53    0.66  5.33  67.23  n/a   0.000
*
    READ STORM                 15.0
    [ Ptot= 88.54 mm ]
    fname : C:\Users\pchiocchio\AppData\Local\Temp\a25ec5df-3cf9-4173-b468-dc45d4356e5f\c779bf9c-fd49-4135-b6f1-
    remark: 100 Year 12 Hour AES (Bloor, TRCA)
*
 *  CALIB NASHYD         0007  1  5.0    0.22    0.02  5.25  64.14 0.72   0.000
    [CN=94.0         ]
    [ N = 2.5:Tp 0.15]
*
    CHANNEL[ 2:  0007]   0089  1  5.0    0.22    0.02  5.25  63.81  n/a   0.000
*
    READ STORM                 15.0
    [ Ptot= 88.54 mm ]
    fname : C:\Users\pchiocchio\AppData\Local\Temp\a25ec5df-3cf9-4173-b468-dc45d4356e5f\c779bf9c-fd49-4135-b6f1-
    remark: 100 Year 12 Hour AES (Bloor, TRCA)
*
 *  CALIB NASHYD         0009  1  5.0    2.18    0.12  5.92  65.09 0.74   0.000
    [CN=94.0         ]
    [ N = 2.5:Tp 0.94]
*
    READ STORM                 15.0
    [ Ptot= 88.54 mm ]
    fname : C:\Users\pchiocchio\AppData\Local\Temp\a25ec5df-3cf9-4173-b468-dc45d4356e5f\c779bf9c-fd49-4135-b6f1-
    remark: 100 Year 12 Hour AES (Bloor, TRCA)
*
 *  CALIB STANDHYD       0114  1  5.0    0.46    0.05  5.25  72.48 0.82   0.000
    [I%=50.0:S%= 2.00]
*
    READ STORM                 15.0
    [ Ptot= 88.54 mm ]
    fname : C:\Users\pchiocchio\AppData\Local\Temp\a25ec5df-3cf9-4173-b468-dc45d4356e5f\c779bf9c-fd49-4135-b6f1-
    remark: 100 Year 12 Hour AES (Bloor, TRCA)
*
 *  CALIB STANDHYD       0132  1  5.0    1.32    0.14  5.25  76.70 0.87   0.000
    [I%=64.0:S%= 2.00]
*
    ADD [  0114+  0132]  0010  3  5.0    1.79    0.18  5.25  75.60  n/a   0.000
*
    ADD [  0010+  0089]  0010  1  5.0    2.01    0.20  5.25  74.31  n/a   0.000
*
    ADD [  0010+  0009]  0010  3  5.0    4.18    0.29  5.25  69.51  n/a   0.000
*
    READ STORM                 15.0
    [ Ptot= 88.54 mm ]
    fname : C:\Users\pchiocchio\AppData\Local\Temp\a25ec5df-3cf9-4173-b468-dc45d4356e5f\c779bf9c-fd49-4135-b6f1-
```

```
    remark: 100 Year 12 Hour AES (Bloor, TRCA)
*
 *  CALIB NASHYD         0100  1  5.0   14.67    0.43  6.83  50.00 0.56   0.000
    [CN=85.0         ]
    [ N = 2.5:Tp 1.53]
*
    READ STORM                 15.0
    [ Ptot= 88.54 mm ]
    fname : C:\Users\pchiocchio\AppData\Local\Temp\a25ec5df-3cf9-4173-b468-dc45d4356e5f\c779bf9c-fd49-4135-b6f1-
    remark: 100 Year 12 Hour AES (Bloor, TRCA)
*
 *  CALIB NASHYD         0102  1  5.0    0.88    0.03  6.33  50.00 0.56   0.000
    [CN=85.0         ]
    [ N = 2.5:Tp 1.12]
*
    ADD [  0100+  0102]  0136  3  5.0   15.55    0.46  6.83  50.00  n/a   0.000
*
    ADD [  0010+  0136]  0129  3  5.0   19.73    0.61  6.25  54.14  n/a   0.000
*
    CHANNEL[ 2:  0129]   0094  1  5.0   19.73    0.59  6.83  54.14  n/a   0.000
*
    READ STORM                 15.0
    [ Ptot= 88.54 mm ]
    fname : C:\Users\pchiocchio\AppData\Local\Temp\a25ec5df-3cf9-4173-b468-dc45d4356e5f\c779bf9c-fd49-4135-b6f1-
    remark: 100 Year 12 Hour AES (Bloor, TRCA)
*
 *  CALIB NASHYD         0037  1  5.0    9.00    0.33  6.92  65.10 0.74   0.000
    [CN=94.0         ]
    [ N = 2.5:Tp 1.70]
*
    ADD [  0037+  0094]  0053  3  5.0   28.73    0.92  6.83  57.57  n/a   0.000
*
    READ STORM                 15.0
    [ Ptot= 88.54 mm ]
    fname : C:\Users\pchiocchio\AppData\Local\Temp\a25ec5df-3cf9-4173-b468-dc45d4356e5f\c779bf9c-fd49-4135-b6f1-
    remark: 100 Year 12 Hour AES (Bloor, TRCA)
*
 *  CALIB NASHYD         0013  1  5.0    1.42    0.13  5.25  64.99 0.73   0.000
    [CN=94.0         ]
    [ N = 2.5:Tp 0.34]
*
    READ STORM                 15.0
    [ Ptot= 88.54 mm ]
    fname : C:\Users\pchiocchio\AppData\Local\Temp\a25ec5df-3cf9-4173-b468-dc45d4356e5f\c779bf9c-fd49-4135-b6f1-
    remark: 100 Year 12 Hour AES (Bloor, TRCA)
*
 *  CALIB NASHYD         0014  1  5.0    0.93    0.08  5.33  65.02 0.73   0.000
    [CN=94.0         ]
    [ N = 2.5:Tp 0.39]
*
    READ STORM                 15.0
    [ Ptot= 88.54 mm ]
    fname : C:\Users\pchiocchio\AppData\Local\Temp\a25ec5df-3cf9-4173-b468-dc45d4356e5f\c779bf9c-fd49-4135-b6f1-
    remark: 100 Year 12 Hour AES (Bloor, TRCA)
*
 *  CALIB STANDHYD       0109  1  5.0   50.15    5.06  5.25  77.91 0.88   0.000
    [I%=68.0:S%= 2.00]
*
 ** Reservoir
    OUTFLOW:             0110  1  5.0   50.15    0.94  6.83  73.63  n/a   0.000
*
    READ STORM                 15.0
    [ Ptot= 88.54 mm ]
    fname : C:\Users\pchiocchio\AppData\Local\Temp\a25ec5df-3cf9-4173-b468-dc45d4356e5f\c779bf9c-fd49-4135-b6f1-
    remark: 100 Year 12 Hour AES (Bloor, TRCA)
*
 *  CALIB STANDHYD       0115  1  5.0    0.23    0.02  5.25  72.46 0.82   0.000
    [I%=50.0:S%= 2.00]
*
    READ STORM                 15.0
    [ Ptot= 88.54 mm ]
    fname : C:\Users\pchiocchio\AppData\Local\Temp\a25ec5df-3cf9-4173-b468-dc45d4356e5f\c779bf9c-fd49-4135-b6f1-
    remark: 100 Year 12 Hour AES (Bloor, TRCA)
*
 *  CALIB STANDHYD       0116  1  5.0    0.29    0.03  5.25  72.47 0.82   0.000
    [I%=50.0:S%= 2.00]
*
    READ STORM                 15.0
    [ Ptot= 88.54 mm ]
    fname : C:\Users\pchiocchio\AppData\Local\Temp\a25ec5df-3cf9-4173-b468-dc45d4356e5f\c779bf9c-fd49-4135-b6f1-
    remark: 100 Year 12 Hour AES (Bloor, TRCA)
*
 *  CALIB STANDHYD       0134  1  5.0    0.54    0.06  5.25  76.69 0.87   0.000
    [I%=64.0:S%= 2.00]
*
    READ STORM                 15.0
    [ Ptot= 88.54 mm ]
    fname : C:\Users\pchiocchio\AppData\Local\Temp\a25ec5df-3cf9-4173-b468-dc45d4356e5f\c779bf9c-fd49-4135-b6f1-
    remark: 100 Year 12 Hour AES (Bloor, TRCA)
*
 *  CALIB STANDHYD       0135  1  5.0    0.26    0.03  5.25  76.68 0.87   0.000
    [I%=64.0:S%= 2.00]
*
    ADD [  0110+  0115]  0012  3  5.0   50.38    0.94  6.83  73.63  n/a   0.000
*
```

```
    ADD [  0012+  0116]  0012  1  5.0   50.67    0.95  6.83  73.62  n/a   0.000
*
    ADD [  0012+  0013]  0012  3  5.0   52.09    0.99  6.42  73.39  n/a   0.000
*
    ADD [  0012+  0134]  0012  1  5.0   52.63    1.00  6.25  73.42  n/a   0.000
*
    ADD [  0012+  0135]  0012  3  5.0   52.89    1.01  6.25  73.44  n/a   0.000
*
    ADD [  0012+  0014]  0012  1  5.0   53.82    1.05  6.25  73.29  n/a   0.000
*
    CHANNEL[ 2:  0012]   0093  1  5.0   53.82    1.04  6.25  73.27  n/a   0.000
*
    READ STORM                 15.0
    [ Ptot= 88.54 mm ]
    fname : C:\Users\pchiocchio\AppData\Local\Temp\a25ec5df-3cf9-4173-b468-dc45d4356e5f\c779bf9c-fd49-4135-b6f1-
    remark: 100 Year 12 Hour AES (Bloor, TRCA)
*
 *  CALIB NASHYD         0039  1  5.0   13.25    0.57  6.50  65.10 0.74   0.000
    [CN=94.0         ]
    [ N = 2.5:Tp 1.35]
*
    ADD [  0039+  0093]  0051  3  5.0   67.07    1.60  6.42  71.66  n/a   0.000
*
    READ STORM                 15.0
    [ Ptot= 88.54 mm ]
    fname : C:\Users\pchiocchio\AppData\Local\Temp\a25ec5df-3cf9-4173-b468-dc45d4356e5f\c779bf9c-fd49-4135-b6f1-
    remark: 100 Year 12 Hour AES (Bloor, TRCA)
*
 *  CALIB NASHYD         0040  1  5.0    7.26    0.33  6.33  65.10 0.74   0.000
    [CN=94.0         ]
    [ N = 2.5:Tp 1.23]
*
    READ STORM                 15.0
    [ Ptot= 88.54 mm ]
    fname : C:\Users\pchiocchio\AppData\Local\Temp\a25ec5df-3cf9-4173-b468-dc45d4356e5f\c779bf9c-fd49-4135-b6f1-
    remark: 100 Year 12 Hour AES (Bloor, TRCA)
*
 *  CALIB NASHYD         0130  1  5.0    4.10    0.15  6.33  50.00 0.56   0.000
    [CN=85.0         ]
    [ N = 2.5:Tp 1.12]
*
    CHANNEL[ 2:  0130]   0101  1  5.0    4.10    0.14  6.75  50.00  n/a   0.000
*
    ADD [  0101+  0040]  0090  3  5.0   11.36    0.47  6.50  59.65  n/a   0.000
*
    ADD [  0090+  0051]  0090  1  5.0   78.43    2.07  6.42  69.92  n/a   0.000
*
    ADD [  0090+  0052]  0090  3  5.0   91.96    2.65  6.25  69.52  n/a   0.000
*
    ADD [  0090+  0053]  0090  1  5.0  120.69    3.53  6.33  66.68  n/a   0.000
*
    CHANNEL[ 2:  0090]   0095  1  5.0  120.69    3.52  6.50  66.67  n/a   0.000
*
    READ STORM                 15.0
    [ Ptot= 88.54 mm ]
    fname : C:\Users\pchiocchio\AppData\Local\Temp\a25ec5df-3cf9-4173-b468-dc45d4356e5f\c779bf9c-fd49-4135-b6f1-
    remark: 100 Year 12 Hour AES (Bloor, TRCA)
*
 *  CALIB NASHYD         0041  1  5.0   12.70    0.63  6.17  65.10 0.74   0.000
    [CN=94.0         ]
    [ N = 2.5:Tp 1.08]
*
    ADD [  0041+  0095]  0050  3  5.0  133.39    4.13  6.42  66.52  n/a   0.000
*
    READ STORM                 15.0
    [ Ptot= 88.54 mm ]
    fname : C:\Users\pchiocchio\AppData\Local\Temp\a25ec5df-3cf9-4173-b468-dc45d4356e5f\c779bf9c-fd49-4135-b6f1-
    remark: 100 Year 12 Hour AES (Bloor, TRCA)
*
 *  CALIB NASHYD         0047  1  5.0   71.95    2.36  7.33  67.11 0.76   0.000
    [CN=95.0         ]
    [ N = 2.5:Tp 2.04]
*
    ADD [  0047+  0050]  0054  3  5.0  205.34    6.32  6.75  66.73  n/a   0.000
*
    ADD [  0054+  0087]  0054  1  5.0  524.38   13.08  7.25  68.81  n/a   0.000
*
    CHANNEL[ 2:  0054]   0088  1  5.0  524.38   13.05  7.42  68.81  n/a   0.000
*
    READ STORM                 15.0
    [ Ptot= 88.54 mm ]
    fname : C:\Users\pchiocchio\AppData\Local\Temp\a25ec5df-3cf9-4173-b468-dc45d4356e5f\c779bf9c-fd49-4135-b6f1-
    remark: 100 Year 12 Hour AES (Bloor, TRCA)
*
 *  CALIB NASHYD         0048  1  5.0   34.24    1.83  5.75  57.77 0.65   0.000
    [CN=90.0         ]
    [ N = 2.5:Tp 0.77]
*
    ADD [  0048+  0088]  0049  3  5.0  558.62   14.07  7.08  68.13  n/a   0.000
*
    READ STORM                 15.0
    [ Ptot= 88.54 mm ]
    fname : C:\Users\pchiocchio\AppData\Local\Temp\a25ec5df-3cf9-4173-b468-dc45d4356e5f\c779bf9c-fd49-4135-b6f1-
    remark: 100 Year 12 Hour AES (Bloor, TRCA)
*
```

```
 *  CALIB STANDHYD       0118  1  5.0   13.25    1.45  5.25  83.33 0.94   0.000
    [I%=86.0:S%= 2.00]
*
    READ STORM                 15.0
    [ Ptot= 88.54 mm ]
    fname : C:\Users\pchiocchio\AppData\Local\Temp\a25ec5df-3cf9-4173-b468-dc45d4356e5f\c779bf9c-fd49-4135-b6f1-
    remark: 100 Year 12 Hour AES (Bloor, TRCA)
*
 *  CALIB STANDHYD       0123  1  5.0    8.30    0.91  5.25  84.23 0.95   0.000
    [I%=89.0:S%= 2.00]
*
    READ STORM                 15.0
    [ Ptot= 88.54 mm ]
    fname : C:\Users\pchiocchio\AppData\Local\Temp\a25ec5df-3cf9-4173-b468-dc45d4356e5f\c779bf9c-fd49-4135-b6f1-
    remark: 100 Year 12 Hour AES (Bloor, TRCA)
*
 *  CALIB STANDHYD       0125  1  5.0   13.70    1.51  5.25  84.23 0.95   0.000
    [I%=89.0:S%= 2.00]
*
```

Macville Secondary Plan – Town of Caledon, Region of Peel
Visual OTTHYMO Hydrologic Model Schematic, January 2021, for 1st Submission
Scenario: Regional Storm, PROPOSED

```
==========================================================================================

       V    V   I    SSSSS  U   U    A    L              (v 6.2.2001)
       V    V   I    SS     U   U   A A   L
        V  V    I     SS    U   U  AAAAA  L
        V  V    I      SS   U   U  A   A  L
         VV     I    SSSSS  UUUUU  A   A  LLLLL

        OOO   TTTTT  TTTTT  H   H  Y   Y  M   M   OOO    TM
       O   O    T      T    H   H   Y Y   MM MM  O   O
       O   O    T      T    H   H    Y    M   M  O   O
        OOO     T      T    H   H    Y    M   M   OOO
Developed and Distributed by Smart City Water Inc
Copyright 2007 - 2020 Smart City Water Inc
All rights reserved.


                  *****  S U M M A R Y   O U T P U T  *****


  Input   filename: C:\Program Files (x86)\Visual OTTHYMO 6.2\VO2\voin.dat
  Output  filename: C:\Users\pchiocchio\AppData\Local\Civica\VH5\d59fad6f-510d-48b8-a35a-1bee91f156cc\ac12e159-b5b1-4f82-9e43-
d76fdf5552ee\s
  Summary filename: C:\Users\pchiocchio\AppData\Local\Civica\VH5\d59fad6f-510d-48b8-a35a-1bee91f156cc\ac12e159-b5b1-4f82-9e43-
d76fdf5552ee\s


DATE: 02/02/2021                          TIME: 05:35:43

USER:


COMMENTS: ____________________________________________________________


  ************************************************
  ** SIMULATION : Regional                      **
  ************************************************

  W/E COMMAND             HYD ID   DT    AREA  ' Qpeak Tpeak   R.V. R.C.   Qbase
                                  min     ha   '  cms   hrs     mm          cms

      START @  0.00 hrs
      --------------------
    READ STORM                 60.0
    [ Ptot=212.00 mm ]
    fname : C:\Users\pchiocchio\AppData\Local\Temp\34fb18d5-d183-48e1-ac6f-35ac59cfaf2a\73109667-76aa-4771-ab3b-
    remark: HAZEL
*
 ** CALIB NASHYD         0004  1  5.0   40.84    3.14 12.00 206.94 0.98   0.000
    [CN=98.0         ]
    [ N = 2.5:Tp 2.02]
*
    CHANNEL[ 2:  0004]   0066  1  5.0   40.84    3.06 12.33 206.94  n/a   0.000
*
    READ STORM                 60.0
    [ Ptot=212.00 mm ]
    fname : C:\Users\pchiocchio\AppData\Local\Temp\34fb18d5-d183-48e1-ac6f-35ac59cfaf2a\73109667-76aa-4771-ab3b-
    remark: HAZEL
*
 ** CALIB NASHYD         0005  1  5.0   34.73    1.75 13.50 206.94 0.98   0.000
    [CN=98.0         ]
    [ N = 2.5:Tp 4.29]
*
    ADD [  0005+  0066]  0003  3  5.0   75.57    4.73 12.58 206.94  n/a   0.000
*
    PIPE   [ 2:  0003]   0120  1  5.0   75.57    4.73 12.67 206.94  n/a   0.000
*
    CHANNEL[ 2:  0120]   0080  1  5.0   75.57    4.71 12.92 206.94  n/a   0.000
*
    READ STORM                 60.0
    [ Ptot=212.00 mm ]
    fname : C:\Users\pchiocchio\AppData\Local\Temp\34fb18d5-d183-48e1-ac6f-35ac59cfaf2a\73109667-76aa-4771-ab3b-
    remark: HAZEL
*
 ** CALIB STANDHYD       0104  1  5.0   83.92   12.08 10.00 208.14 0.98   0.000
    [I%=78.0:S%= 2.00]
*
 ** Reservoir
    OUTFLOW:             0105  1  5.0   83.92    4.89 11.33 203.82  n/a   0.000
*
    DUHYD                0137  1  5.0   83.92    4.89 11.33 203.82  n/a   0.000
       MAJOR SYSTEM:     0137  2  5.0   55.91    4.40 11.33 203.82  n/a   0.000
       MINOR SYSTEM:     0137  3  5.0   28.01    0.49  4.50 203.82  n/a   0.000
*
    READ STORM                 60.0
    [ Ptot=212.00 mm ]
    fname : C:\Users\pchiocchio\AppData\Local\Temp\34fb18d5-d183-48e1-ac6f-35ac59cfaf2a\73109667-76aa-4771-ab3b-
    remark: HAZEL
*
 *  CALIB STANDHYD       0121  1  5.0    3.04    0.44 10.00 200.42 0.95   0.000
    [I%=34.0:S%= 2.00]
*
    ADD [  0121+  0137]  0122  3  5.0   58.95    4.59 11.17 203.64  n/a   0.000
```

```
*
    ADD [  0122+  0080]  0122  1  5.0  134.52    8.79 12.00 205.49  n/a   0.000
*
    CHANNEL[ 2:  0122]   0081  1  5.0  134.52    8.78 12.08 205.49  n/a   0.000
*
    READ STORM                 60.0
    [ Ptot=212.00 mm ]
    fname : C:\Users\pchiocchio\AppData\Local\Temp\34fb18d5-d183-48e1-ac6f-35ac59cfaf2a\73109667-76aa-4771-ab3b-
    remark: HAZEL
*
 ** CALIB STANDHYD       0117  1  5.0    7.94    1.17 10.00 210.77 0.99   0.000
    [I%=93.0:S%= 2.00]
*
    ADD [  0117+  0137]  0035  3  5.0   35.95    1.66 10.00 205.36  n/a   0.000
*
    ADD [  0035+  0081]  0035  1  5.0  170.47    9.55 12.00 205.47  n/a   0.000
*
    CHANNEL[ 2:  0035]   0082  1  5.0  170.47    9.50 12.00 205.44  n/a   0.000
*
    READ STORM                 60.0
    [ Ptot=212.00 mm ]
    fname : C:\Users\pchiocchio\AppData\Local\Temp\34fb18d5-d183-48e1-ac6f-35ac59cfaf2a\73109667-76aa-4771-ab3b-
    remark: HAZEL
*
 ** CALIB NASHYD         0044  1  5.0   24.38    1.23 13.50 206.94 0.98   0.000
    [CN=98.0         ]
    [ N = 2.5:Tp 4.29]
*
    ADD [  0044+  0082]  0056  3  5.0  194.85   10.60 12.00 205.63  n/a   0.000
*
    CHANNEL[ 2:  0056]   0083  1  5.0  194.85   10.58 12.08 205.61  n/a   0.000
*
    READ STORM                 60.0
    [ Ptot=212.00 mm ]
    fname : C:\Users\pchiocchio\AppData\Local\Temp\34fb18d5-d183-48e1-ac6f-35ac59cfaf2a\73109667-76aa-4771-ab3b-
    remark: HAZEL
*
 ** CALIB NASHYD         0043  1  5.0   10.09    1.10 11.00 206.90 0.98   0.000
    [CN=98.0         ]
    [ N = 2.5:Tp 0.81]
*
    READ STORM                 60.0
    [ Ptot=212.00 mm ]
    fname : C:\Users\pchiocchio\AppData\Local\Temp\34fb18d5-d183-48e1-ac6f-35ac59cfaf2a\73109667-76aa-4771-ab3b-
    remark: HAZEL
*
 ** CALIB NASHYD         0045  1  5.0    5.34    0.64 10.42 206.84 0.98   0.000
    [CN=98.0         ]
    [ N = 2.5:Tp 0.56]
*
    ADD [  0043+  0045]  0086  3  5.0   15.43    1.71 10.83 206.88  n/a   0.000
*
    ADD [  0086+  0083]  0086  1  5.0  210.28   11.68 11.67 205.71  n/a   0.000
*
    CHANNEL[ 2:  0086]   0085  1  5.0  210.28   11.67 11.83 205.70  n/a   0.000
*
    READ STORM                 60.0
    [ Ptot=212.00 mm ]
    fname : C:\Users\pchiocchio\AppData\Local\Temp\34fb18d5-d183-48e1-ac6f-35ac59cfaf2a\73109667-76aa-4771-ab3b-
    remark: HAZEL
*
 ** CALIB NASHYD         0042  1  5.0   33.34    3.18 11.33 206.93 0.98   0.000
    [CN=98.0         ]
    [ N = 2.5:Tp 1.21]
*
    READ STORM                 60.0
    [ Ptot=212.00 mm ]
    fname : C:\Users\pchiocchio\AppData\Local\Temp\34fb18d5-d183-48e1-ac6f-35ac59cfaf2a\73109667-76aa-4771-ab3b-
    remark: HAZEL
*
 ** CALIB NASHYD         0046  1  5.0   75.42    5.47 12.17 206.94 0.98   0.000
    [CN=98.0         ]
    [ N = 2.5:Tp 2.29]
*
    ADD [  0042+  0046]  0055  3  5.0  108.76    8.43 11.67 206.93  n/a   0.000
*
    ADD [  0055+  0085]  0055  1  5.0  319.04   20.10 11.67 206.12  n/a   0.000
*
    CHANNEL[ 2:  0055]   0087  1  5.0  319.04   20.07 11.83 206.11  n/a   0.000
*
    READ STORM                 60.0
    [ Ptot=212.00 mm ]
    fname : C:\Users\pchiocchio\AppData\Local\Temp\34fb18d5-d183-48e1-ac6f-35ac59cfaf2a\73109667-76aa-4771-ab3b-
    remark: HAZEL
*
 ** CALIB NASHYD         0006  1  5.0    2.42    0.20 11.67 204.42 0.96   0.000
    [CN=97.0         ]
    [ N = 2.5:Tp 1.70]
*
    READ STORM                 60.0
    [ Ptot=212.00 mm ]
    fname : C:\Users\pchiocchio\AppData\Local\Temp\34fb18d5-d183-48e1-ac6f-35ac59cfaf2a\73109667-76aa-4771-ab3b-
    remark: HAZEL
*
 *  CALIB STANDHYD       0113  1  5.0    0.62    0.09 10.00 203.22 0.96   0.000
```

```
    [I%=50.0:S%= 2.00]
*
    ADD [  0113+  0006]  0139  3  5.0    3.04    0.25 11.00 204.17  n/a   0.000
*
    CHANNEL[ 2:  0139]   0091  1  5.0    3.04    0.25 11.00 204.17  n/a   0.000
*
    READ STORM                 60.0
    [ Ptot=212.00 mm ]
    fname : C:\Users\pchiocchio\AppData\Local\Temp\34fb18d5-d183-48e1-ac6f-35ac59cfaf2a\73109667-76aa-4771-ab3b-
    remark: HAZEL
*
 *  CALIB NASHYD         0008  1  5.0    0.95    0.10 11.00 204.39 0.96   0.000
    [CN=97.0         ]
    [ N = 2.5:Tp 0.85]
*
    READ STORM                 60.0
    [ Ptot=212.00 mm ]
    fname : C:\Users\pchiocchio\AppData\Local\Temp\34fb18d5-d183-48e1-ac6f-35ac59cfaf2a\73109667-76aa-4771-ab3b-
    remark: HAZEL
*
 *  CALIB STANDHYD       0111  1  5.0    0.55    0.08 10.00 203.22 0.96   0.000
    [I%=50.0:S%= 2.00]
*
    READ STORM                 60.0
    [ Ptot=212.00 mm ]
    fname : C:\Users\pchiocchio\AppData\Local\Temp\34fb18d5-d183-48e1-ac6f-35ac59cfaf2a\73109667-76aa-4771-ab3b-
    remark: HAZEL
*
 *  CALIB STANDHYD       0133  1  5.0    1.76    0.26 10.00 205.68 0.97   0.000
    [I%=64.0:S%= 2.00]
*
    ADD [  0111+  0133]  0011  3  5.0    2.31    0.34 10.00 205.09  n/a   0.000
*
    ADD [  0011+  0008]  0011  1  5.0    3.26    0.41 10.00 204.89  n/a   0.000
*
    ADD [  0011+  0091]  0011  3  5.0    6.30    0.63 10.00 204.54  n/a   0.000
*
    CHANNEL[ 2:  0011]   0092  1  5.0    6.30    0.61 10.00 204.54  n/a   0.000
*
    READ STORM                 60.0
    [ Ptot=212.00 mm ]
    fname : C:\Users\pchiocchio\AppData\Local\Temp\34fb18d5-d183-48e1-ac6f-35ac59cfaf2a\73109667-76aa-4771-ab3b-
    remark: HAZEL
*
 *  CALIB NASHYD         0038  1  5.0    7.23    0.66 11.42 204.41 0.96   0.000
    [CN=97.0         ]
    [ N = 2.5:Tp 1.35]
*
    ADD [  0038+  0092]  0052  3  5.0   13.53    1.22 11.00 204.47  n/a   0.000
*
    READ STORM                 60.0
    [ Ptot=212.00 mm ]
    fname : C:\Users\pchiocchio\AppData\Local\Temp\34fb18d5-d183-48e1-ac6f-35ac59cfaf2a\73109667-76aa-4771-ab3b-
    remark: HAZEL
*
 *  CALIB NASHYD         0007  1  5.0    0.22    0.03 10.08 204.11 0.96   0.000
    [CN=97.0         ]
    [ N = 2.5:Tp 0.36]
*
    CHANNEL[ 2:  0007]   0089  1  5.0    0.22    0.03 10.50 203.54  n/a   0.000
*
    READ STORM                 60.0
    [ Ptot=212.00 mm ]
    fname : C:\Users\pchiocchio\AppData\Local\Temp\34fb18d5-d183-48e1-ac6f-35ac59cfaf2a\73109667-76aa-4771-ab3b-
    remark: HAZEL
*
 *  CALIB NASHYD         0009  1  5.0    2.18    0.23 11.08 204.40 0.96   0.000
    [CN=97.0         ]
    [ N = 2.5:Tp 0.94]
*
    READ STORM                 60.0
    [ Ptot=212.00 mm ]
    fname : C:\Users\pchiocchio\AppData\Local\Temp\34fb18d5-d183-48e1-ac6f-35ac59cfaf2a\73109667-76aa-4771-ab3b-
    remark: HAZEL
*
 *  CALIB STANDHYD       0114  1  5.0    0.46    0.07 10.00 203.22 0.96   0.000
    [I%=50.0:S%= 2.00]
*
    READ STORM                 60.0
    [ Ptot=212.00 mm ]
    fname : C:\Users\pchiocchio\AppData\Local\Temp\34fb18d5-d183-48e1-ac6f-35ac59cfaf2a\73109667-76aa-4771-ab3b-
    remark: HAZEL
*
 *  CALIB STANDHYD       0132  1  5.0    1.32    0.19 10.00 205.68 0.97   0.000
    [I%=64.0:S%= 2.00]
*
    ADD [  0114+  0132]  0010  3  5.0    1.79    0.26 10.00 205.04  n/a   0.000
*
    ADD [  0010+  0089]  0010  1  5.0    2.01    0.28 10.00 204.87  n/a   0.000
*
    ADD [  0010+  0009]  0010  3  5.0    4.18    0.45 10.00 204.63  n/a   0.000
*
    READ STORM                 60.0
    [ Ptot=212.00 mm ]
    fname : C:\Users\pchiocchio\AppData\Local\Temp\34fb18d5-d183-48e1-ac6f-35ac59cfaf2a\73109667-76aa-4771-ab3b-
```

```
    remark: HAZEL
*
 *  CALIB NASHYD         0100  1  5.0   14.67    1.25 11.58 194.46 0.92   0.000
    [CN=93.0         ]
    [ N = 2.5:Tp 1.53]
*
    READ STORM                 60.0
    [ Ptot=212.00 mm ]
    fname : C:\Users\pchiocchio\AppData\Local\Temp\34fb18d5-d183-48e1-ac6f-35ac59cfaf2a\73109667-76aa-4771-ab3b-
    remark: HAZEL
*
 *  CALIB NASHYD         0102  1  5.0    0.88    0.09 11.25 194.44 0.92   0.000
    [CN=93.0         ]
    [ N = 2.5:Tp 1.12]
*
    ADD [  0100+  0102]  0141  3  5.0   15.55    1.33 11.50 194.46  n/a   0.000
*
    ADD [  0010+  0141]  0138  3  5.0   19.73    1.70 11.00 196.61  n/a   0.000
*
    CHANNEL[ 2:  0138]   0094  1  5.0   19.73    1.64 11.50 196.61  n/a   0.000
*
    READ STORM                 60.0
    [ Ptot=212.00 mm ]
    fname : C:\Users\pchiocchio\AppData\Local\Temp\34fb18d5-d183-48e1-ac6f-35ac59cfaf2a\73109667-76aa-4771-ab3b-
    remark: HAZEL
*
 *  CALIB NASHYD         0037  1  5.0    9.00    0.74 11.67 204.42 0.96   0.000
    [CN=97.0         ]
    [ N = 2.5:Tp 1.70]
*
    ADD [  0037+  0094]  0053  3  5.0   28.73    2.38 11.58 199.06  n/a   0.000
*
    READ STORM                 60.0
    [ Ptot=212.00 mm ]
    fname : C:\Users\pchiocchio\AppData\Local\Temp\34fb18d5-d183-48e1-ac6f-35ac59cfaf2a\73109667-76aa-4771-ab3b-
    remark: HAZEL
*
 *  CALIB NASHYD         0013  1  5.0    1.42    0.13 11.33 204.41 0.96   0.000
    [CN=97.0         ]
    [ N = 2.5:Tp 1.22]
*
    READ STORM                 60.0
    [ Ptot=212.00 mm ]
    fname : C:\Users\pchiocchio\AppData\Local\Temp\34fb18d5-d183-48e1-ac6f-35ac59cfaf2a\73109667-76aa-4771-ab3b-
    remark: HAZEL
*
 *  CALIB NASHYD         0014  1  5.0    0.93    0.10 11.08 204.39 0.96   0.000
    [CN=97.0         ]
    [ N = 2.5:Tp 0.87]
*
    READ STORM                 60.0
    [ Ptot=212.00 mm ]
    fname : C:\Users\pchiocchio\AppData\Local\Temp\34fb18d5-d183-48e1-ac6f-35ac59cfaf2a\73109667-76aa-4771-ab3b-
    remark: HAZEL
*
 *  CALIB STANDHYD       0109  1  5.0   50.15    7.22 10.00 206.39 0.97   0.000
    [I%=68.0:S%= 2.00]
*
 ** Reservoir
    OUTFLOW:             0110  1  5.0   50.15    4.38 11.17 202.90  n/a   0.000
*
    READ STORM                 60.0
    [ Ptot=212.00 mm ]
    fname : C:\Users\pchiocchio\AppData\Local\Temp\34fb18d5-d183-48e1-ac6f-35ac59cfaf2a\73109667-76aa-4771-ab3b-
    remark: HAZEL
*
 *  CALIB STANDHYD       0115  1  5.0    0.23    0.03 10.00 203.20 0.96   0.000
    [I%=50.0:S%= 2.00]
*
    READ STORM                 60.0
    [ Ptot=212.00 mm ]
    fname : C:\Users\pchiocchio\AppData\Local\Temp\34fb18d5-d183-48e1-ac6f-35ac59cfaf2a\73109667-76aa-4771-ab3b-
    remark: HAZEL
*
 *  CALIB STANDHYD       0116  1  5.0    0.29    0.04 10.00 203.21 0.96   0.000
    [I%=50.0:S%= 2.00]
*
    READ STORM                 60.0
    [ Ptot=212.00 mm ]
    fname : C:\Users\pchiocchio\AppData\Local\Temp\34fb18d5-d183-48e1-ac6f-35ac59cfaf2a\73109667-76aa-4771-ab3b-
    remark: HAZEL
*
 *  CALIB STANDHYD       0134  1  5.0    0.54    0.08 10.00 205.68 0.97   0.000
    [I%=64.0:S%= 2.00]
*
    READ STORM                 60.0
    [ Ptot=212.00 mm ]
    fname : C:\Users\pchiocchio\AppData\Local\Temp\34fb18d5-d183-48e1-ac6f-35ac59cfaf2a\73109667-76aa-4771-ab3b-
    remark: HAZEL
*
 *  CALIB STANDHYD       0140  1  5.0    0.26    0.04 10.00 205.67 0.97   0.000
    [I%=64.0:S%= 2.00]
*
    ADD [  0110+  0115]  0012  3  5.0   50.38    4.40 11.08 202.90  n/a   0.000
*
```

```
    ADD [  0012+  0116]  0012  1  5.0   50.67    4.42 11.08 202.90  n/a   0.000
*
    ADD [  0012+  0013]  0012  3  5.0   52.09    4.55 11.08 202.95  n/a   0.000
*
    ADD [  0012+  0134]  0012  1  5.0   52.63    4.59 11.00 202.97  n/a   0.000
*
    ADD [  0012+  0014]  0012  3  5.0   53.56    4.69 11.00 203.00  n/a   0.000
*
    ADD [  0012+  0140]  0012  1  5.0   53.82    4.72 11.00 203.01  n/a   0.000
*
    CHANNEL[ 2:  0012]   0093  1  5.0   53.82    4.69 11.17 202.99  n/a   0.000
*
    READ STORM                 60.0
    [ Ptot=212.00 mm ]
    fname : C:\Users\pchiocchio\AppData\Local\Temp\34fb18d5-d183-48e1-ac6f-35ac59cfaf2a\73109667-76aa-4771-ab3b-
    remark: HAZEL
*
 *  CALIB NASHYD         0039  1  5.0   13.25    1.21 11.42 204.41 0.96   0.000
    [CN=97.0         ]
    [ N = 2.5:Tp 1.35]
*
    ADD [  0039+  0093]  0051  3  5.0   67.07    5.88 11.25 203.27  n/a   0.000
*
    READ STORM                 60.0
    [ Ptot=212.00 mm ]
    fname : C:\Users\pchiocchio\AppData\Local\Temp\34fb18d5-d183-48e1-ac6f-35ac59cfaf2a\73109667-76aa-4771-ab3b-
    remark: HAZEL
*
 *  CALIB NASHYD         0040  1  5.0    7.26    0.69 11.33 204.41 0.96   0.000
    [CN=97.0         ]
    [ N = 2.5:Tp 1.23]
*
    READ STORM                 60.0
    [ Ptot=212.00 mm ]
    fname : C:\Users\pchiocchio\AppData\Local\Temp\34fb18d5-d183-48e1-ac6f-35ac59cfaf2a\73109667-76aa-4771-ab3b-
    remark: HAZEL
*
 *  CALIB NASHYD         0130  1  5.0    4.10    0.40 11.25 184.52 0.87   0.000
    [CN=93.0         ]
    [ N = 2.5:Tp 1.12]
*
    CHANNEL[ 2:  0130]   0101  1  5.0    4.10    0.39 11.58 184.52  n/a   0.000
*
    ADD [  0101+  0040]  0090  3  5.0   11.36    1.07 11.42 197.23  n/a   0.000
*
    ADD [  0090+  0051]  0090  1  5.0   78.43    6.94 11.25 202.40  n/a   0.000
*
    ADD [  0090+  0052]  0090  3  5.0   91.96    8.11 11.08 202.70  n/a   0.000
*
    ADD [  0090+  0053]  0090  1  5.0  120.69   10.44 11.17 201.84  n/a   0.000
*
    CHANNEL[ 2:  0090]   0095  1  5.0  120.69   10.42 11.33 201.83  n/a   0.000
*
    READ STORM                 60.0
    [ Ptot=212.00 mm ]
    fname : C:\Users\pchiocchio\AppData\Local\Temp\34fb18d5-d183-48e1-ac6f-35ac59cfaf2a\73109667-76aa-4771-ab3b-
    remark: HAZEL
*
 *  CALIB NASHYD         0041  1  5.0   12.70    1.26 11.17 204.41 0.96   0.000
    [CN=97.0         ]
    [ N = 2.5:Tp 1.08]
*
    ADD [  0041+  0095]  0050  3  5.0  133.39   11.68 11.25 202.08  n/a   0.000
*
    READ STORM                 60.0
    [ Ptot=212.00 mm ]
    fname : C:\Users\pchiocchio\AppData\Local\Temp\34fb18d5-d183-48e1-ac6f-35ac59cfaf2a\73109667-76aa-4771-ab3b-
    remark: HAZEL
*
 *  CALIB NASHYD         0047  1  5.0   71.95    5.50 12.00 206.94 0.98   0.000
    [CN=98.0         ]
    [ N = 2.5:Tp 2.04]
*
    ADD [  0047+  0050]  0054  3  5.0  205.34   16.96 11.42 203.78  n/a   0.000
*
    ADD [  0054+  0087]  0054  1  5.0  524.38   36.89 11.58 205.20  n/a   0.000
*
    CHANNEL[ 2:  0054]   0088  1  5.0  524.38   36.83 11.67 205.20  n/a   0.000
*
    READ STORM                 60.0
    [ Ptot=212.00 mm ]
    fname : C:\Users\pchiocchio\AppData\Local\Temp\34fb18d5-d183-48e1-ac6f-35ac59cfaf2a\73109667-76aa-4771-ab3b-
    remark: HAZEL
*
 *  CALIB NASHYD         0048  1  5.0   34.24    3.76 11.00 199.38 0.94   0.000
    [CN=95.0         ]
    [ N = 2.5:Tp 0.77]
*
    ADD [  0048+  0088]  0049  3  5.0  558.62   40.02 11.58 204.84  n/a   0.000
*
    READ STORM                 60.0
    [ Ptot=212.00 mm ]
    fname : C:\Users\pchiocchio\AppData\Local\Temp\34fb18d5-d183-48e1-ac6f-35ac59cfaf2a\73109667-76aa-4771-ab3b-
    remark: HAZEL
*
```

```
 *  CALIB STANDHYD       0118  1  5.0   13.25    1.95 10.00 209.54 0.99   0.000
    [I%=86.0:S%= 2.00]
*
    READ STORM                 60.0
    [ Ptot=212.00 mm ]
    fname : C:\Users\pchiocchio\AppData\Local\Temp\34fb18d5-d183-48e1-ac6f-35ac59cfaf2a\73109667-76aa-4771-ab3b-
    remark: HAZEL
*
 *  CALIB STANDHYD       0123  1  5.0    8.30    1.22 10.00 210.07 0.99   0.000
    [I%=89.0:S%= 2.00]
*
    READ STORM                 60.0
    [ Ptot=212.00 mm ]
    fname : C:\Users\pchiocchio\AppData\Local\Temp\34fb18d5-d183-48e1-ac6f-35ac59cfaf2a\73109667-76aa-4771-ab3b-
    remark: HAZEL
*
 *  CALIB STANDHYD       0125  1  5.0   13.70    2.01 10.00 210.07 0.99   0.000
    [I%=89.0:S%= 2.00]
*
 FINISH

==============================================================================================================
```

APPENDIX 6-3

Preliminary OGS Sizing

Stormceptor®

Stormceptor® EF Sizing Report

STORMCEPTOR®
ESTIMATED NET ANNUAL SEDIMENT (TSS) LOAD REDUCTION

02/01/2021

Province:	Ontario
City:	Bolton
Nearest Rainfall Station:	TORONTO LESTER B. PEARSON INT'L AP
NCDC Rainfall Station Id:	8733
Years of Rainfall Data:	44

Project Name:	Macville
Project Number:	15-458
Designer Name:	Urbantech Water
Designer Company:	Urbantech
Designer Email:	Urbantech.water@gmail.com
Designer Phone:	905-946-9461
EOR Name:	
EOR Company:	
EOR Email:	
EOR Phone:	

Site Name:	Catchment 104-1 (OGS 1 to HW7)
Drainage Area (ha):	1.32
% Imperviousness:	64.00

Runoff Coefficient 'c': 0.68

Particle Size Distribution:	Fine
Target TSS Removal (%):	80.0

Required Water Quality Runoff Volume Capture (%):	90.00
Estimated Water Quality Flow Rate (L/s):	33.60
Oil / Fuel Spill Risk Site?	No
Upstream Flow Control?	No
Peak Conveyance (maximum) Flow Rate (L/s):	
Site Sediment Transport Rate (kg/ha/yr):	

Net Annual Sediment (TSS) Load Reduction Sizing Summary

Stormceptor Model	TSS Removal Provided (%)
EF4	69
EF6	79
EF8	84
EF10	87
EF12	89

Recommended Stormceptor EF Model:	**EF8**
Estimated Net Annual Sediment (TSS) Load Reduction (%):	**84**
Water Quality Runoff Volume Capture (%):	**> 90**

imbrium

THIRD-PARTY TESTING AND VERIFICATION

►**Stormceptor® EF and Stormceptor® EFO** are the latest evolutions in the Stormceptor® oil-grit separator (OGS) technology series, and are designed to remove a wide variety of pollutants from stormwater and snowmelt runoff. These technologies have been third-party tested in accordance with the Canadian ETV **Procedure for Laboratory Testing of Oil-Grit Separators** and performance has been third-party verified in accordance with the **ISO 14034 Environmental Technology Verification (ETV)** protocol.

PERFORMANCE

►**Stormceptor® EF and EFO** remove stormwater pollutants through gravity separation and floatation, and feature a patent-pending design that generates positive removal of total suspended solids (TSS) throughout each storm event, including high-intensity storms. Captured pollutants include sediment, free oils, and sediment-bound pollutants such as nutrients, heavy metals, and petroleum hydrocarbons. Stormceptor is sized to remove a high level of TSS from the frequent rainfall events that contribute the vast majority of annual runoff volume and pollutant load. The technology incorporates an internal bypass to convey excessive stormwater flows from high-intensity storms through the device without resuspension and washout (scour) of previously captured pollutants. Proper routine maintenance ensures high pollutant removal performance and protection of downstream waterwavs.

PARTICLE SIZE DISTRIBUTION (PSD)

►The **Canadian ETV PSD** shown in the table below was used, or in part, for this sizing. This is the identical PSD that is referenced in the Canadian ETV ***Procedure for Laboratory Testing of Oil-Grit Separators*** for both sediment removal testing and scour testing. The Canadian ETV PSD contains a wide range of particle sizes in the sand and silt fractions, and is considered reasonably representative of the particle size fractions found in typical urban stormwater runoff.

Particle Size (μm)	Percent Less Than	Particle Size Fraction (μm)	Percent
1000	100	500-1000	5
500	95	250-500	5
250	90	150-250	15
150	75	100-150	15
100	60	75-100	10
75	50	50-75	5
50	45	20-50	10
20	35	8-20	15
8	20	5-8	10
5	10	2-5	5
2	5	<2	5

Rainfall Intensity (mm / hr)	Percent Rainfall Volume (%)	Cumulative Rainfall Volume (%)	Flow Rate (L/s)	Flow Rate (L/min)	Surface Loading Rate (L/min/m²)	Removal Efficiency (%)	Incremental Removal (%)	Cumulative Removal (%)
1	49.2	49.2	2.51	151.0	32.0	93	45.8	45.8
2	9.6	58.8	5.02	301.0	64.0	91	8.7	54.5
3	6.3	65.1	7.53	452.0	96.0	88	5.5	60.0
4	4.2	69.3	10.04	602.0	128.0	85	3.6	63.6
5	4.3	73.6	12.55	753.0	160.0	80	3.5	67.0
6	3.2	76.8	15.06	904.0	192.0	77	2.5	69.5
7	2.8	79.6	17.57	1054.0	224.0	74	2.1	71.6
8	2.3	81.9	20.08	1205.0	256.0	72	1.6	73.2
9	2.0	83.9	22.59	1355.0	288.0	69	1.4	74.6
10	1.4	85.3	25.10	1506.0	320.0	65	0.9	75.5
11	1.5	86.8	27.61	1657.0	352.0	63	0.9	76.5
12	1.5	88.3	30.12	1807.0	385.0	60	0.9	77.4
13	1.2	89.5	32.63	1958.0	417.0	58	0.7	78.0
14	1.3	90.8	35.14	2108.0	449.0	58	0.7	78.8
15	0.7	91.5	37.65	2259.0	481.0	57	0.4	79.2
16	0.9	92.4	40.16	2410.0	513.0	57	0.5	79.7
17	0.9	93.3	42.67	2560.0	545.0	57	0.5	80.2
18	0.9	94.2	45.18	2711.0	577.0	56	0.5	80.7
19	0.6	94.8	47.69	2861.0	609.0	56	0.3	81.1
20	0.4	95.2	50.20	3012.0	641.0	56	0.2	81.3
21	0.5	95.7	52.71	3163.0	673.0	56	0.3	81.6
22	0.4	96.1	55.22	3313.0	705.0	56	0.2	81.8
23	0.3	96.4	57.73	3464.0	737.0	55	0.2	82.0
24	0.3	96.7	60.24	3614.0	769.0	55	0.2	82.1
25	0.3	97.0	62.75	3765.0	801.0	55	0.2	82.3

Rainfall Intensity (mm / hr)	Percent Rainfall Volume (%)	Cumulative Rainfall Volume (%)	Flow Rate (L/s)	Flow Rate (L/min)	Surface Loading Rate (L/min/m²)	Removal Efficiency (%)	Incremental Removal (%)	Cumulative Removal (%)
26	0.4	97.4	65.26	3916.0	833.0	55	0.2	82.5
27	0.2	97.6	67.77	4066.0	865.0	55	0.1	82.6
28	0.2	97.8	70.28	4217.0	897.0	55	0.1	82.7
29	0.3	98.1	72.79	4367.0	929.0	54	0.2	82.9
30	0.3	98.4	75.30	4518.0	961.0	54	0.2	83.0
31	0.1	98.5	77.81	4669.0	993.0	54	0.1	83.1
32	0.2	98.7	80.32	4819.0	1025.0	54	0.1	83.2
33	0.1	98.8	82.83	4970.0	1057.0	55	0.1	83.3
34	0.1	98.9	85.34	5120.0	1089.0	55	0.1	83.3
35	0.1	99.0	87.85	5271.0	1121.0	56	0.1	83.4
36	0.1	99.1	90.36	5422.0	1154.0	56	0.1	83.4
37	0.1	99.2	92.87	5572.0	1186.0	56	0.1	83.5
38	0.1	99.3	95.38	5723.0	1218.0	57	0.1	83.5
39	0.1	99.4	97.89	5873.0	1250.0	57	0.1	83.6
40	0.0	99.4	100.40	6024.0	1282.0	58	0.0	83.6
41	0.0	99.4	102.91	6175.0	1314.0	58	0.0	83.6
42	0.0	99.4	105.42	6325.0	1346.0	58	0.0	83.6
43	0.0	99.4	107.93	6476.0	1378.0	59	0.0	83.6
44	0.1	99.5	110.44	6626.0	1410.0	59	0.1	83.7
45	0.0	99.5	112.95	6777.0	1442.0	57	0.0	83.7
46	0.1	99.6	115.46	6928.0	1474.0	56	0.1	83.7
47	0.0	99.6	117.97	7078.0	1506.0	55	0.0	83.7
48	0.0	99.6	120.48	7229.0	1538.0	54	0.0	83.7
49	0.0	99.6	122.99	7379.0	1570.0	53	0.0	83.7
50	0.0	99.6	125.50	7530.0	1602.0	52	0.0	83.7
Estimated Net Annual Sediment (TSS) Load Reduction =								**84 %**

RAINFALL DATA FROM TORONTO LESTER B. PEARSON INT'L AP RAINFALL STATION

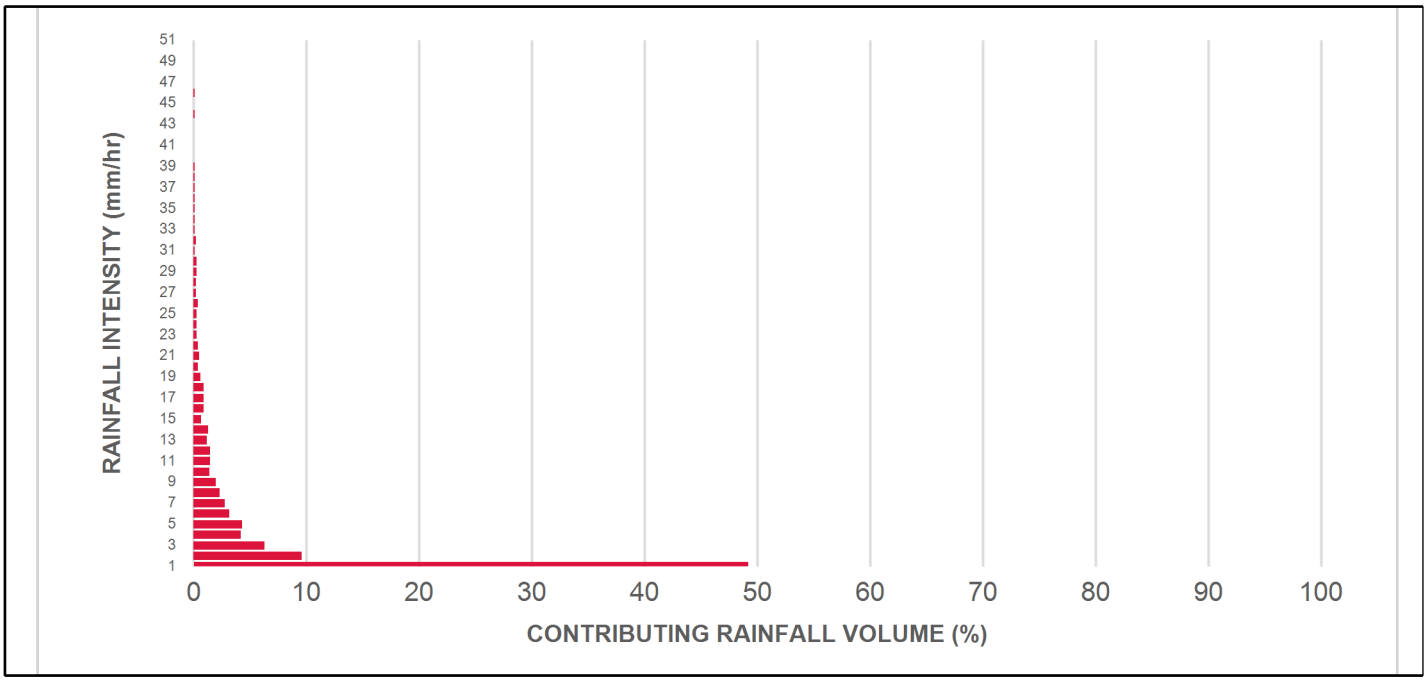

INCREMENTAL AND CUMULATIVE TSS REMOVAL FOR THE RECOMMENDED STORMCEPTOR® MODEL

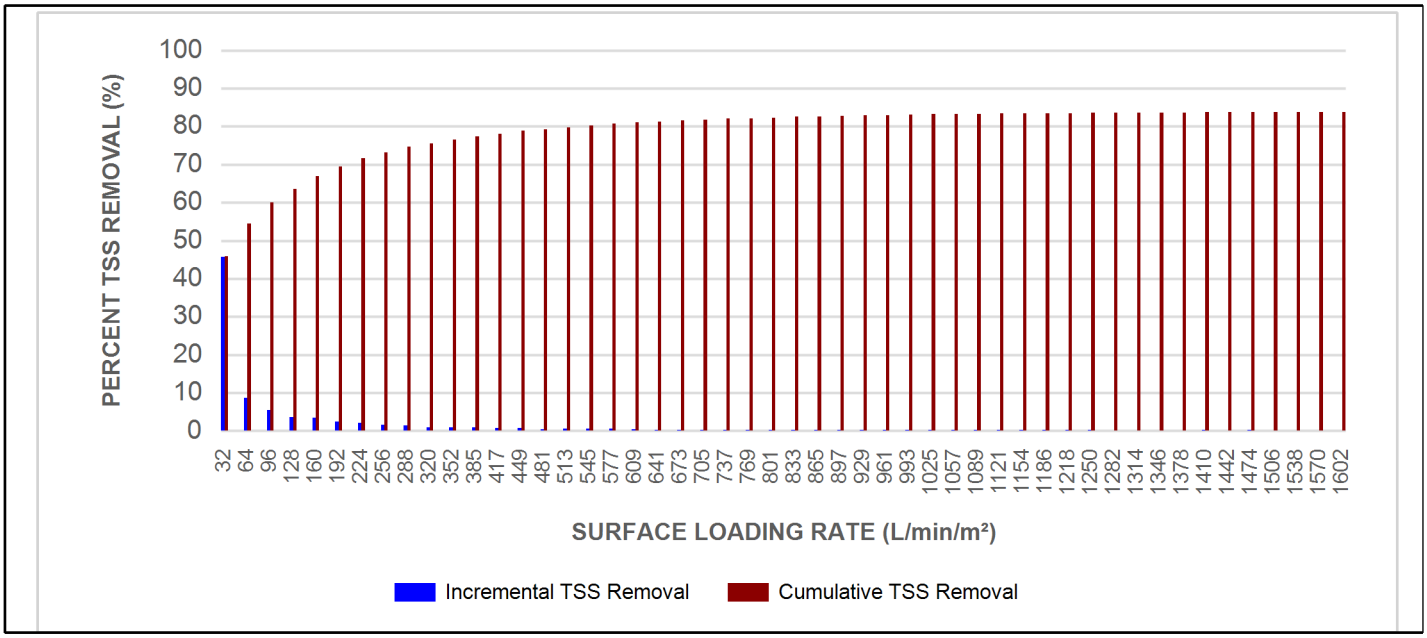

Maximum Pipe Diameter / Peak Conveyance

Stormceptor EF / EFO	Model Diameter		Min Angle Inlet / Outlet Pipes	Max Inlet Pipe Diameter		Max Outlet Pipe Diameter		Peak Conveyance Flow Rate	
	(m)	(ft)		(mm)	(in)	(mm)	(in)	(L/s)	(cfs)
EF4 / EFO4	1.2	4	90	609	24	609	24	425	15
EF6 / EFO6	1.8	6	90	914	36	914	36	990	35
EF8 / EFO8	2.4	8	90	1219	48	1219	48	1700	60
EF10 / EFO10	3.0	10	90	1828	72	1828	72	2830	100
EF12 / EFO12	3.6	12	90	1828	72	1828	72	2830	100

SCOUR PREVENTION AND ONLINE CONFIGURATION

►**Stormceptor® EF and EFO** feature an internal bypass and superior scour prevention technology that have been demonstrated in third-party testing according to the scour testing provisions of the Canadian ETV **Procedure for Laboratory Testing of Oil-Grit Separators**, and the exceptional scour test performance has been third-party verified in accordance with the ISO 14034 ETV protocol. As a result, Stormceptor EF and EFO are approved for online installation, eliminating the need for costly additional bypass structures, piping, and installation expense.

DESIGN FLEXIBILITY

►**Stormceptor® EF** and **EFO** offers design flexibility in one simplified platform, accepting stormwater flow from a single inlet pipe or multiple inlet pipes, and/or surface runoff through an inlet grate. The device can also serve as a junction structure, accommodate a 90-degree inlet-to-outlet bend angle, and can be modified to ensure performance in submerged conditions.

OIL CAPTURE AND RETENTION

►While Stormceptor® EF will capture and retain oil from dry weather spills and low intensity runoff, **Stormceptor® EFO** has demonstrated superior oil capture and greater than 99% oil retention in third-party testing according to the light liquid re-entrainment testing provisions of the Canadian ETV **Procedure for Laboratory Testing of Oil-Grit Separators**. Stormceptor EFO is recommended for sites where oil capture and retention is a requirement.

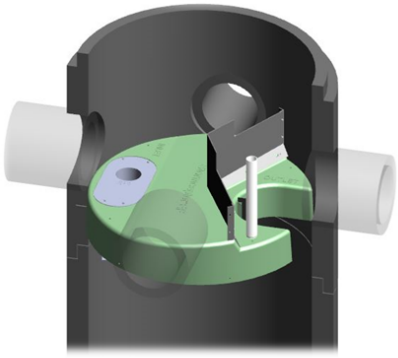

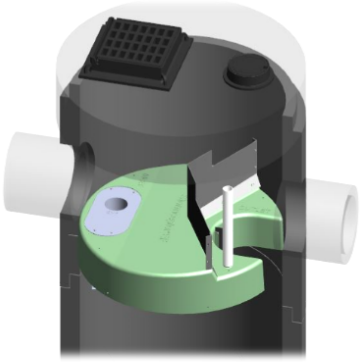

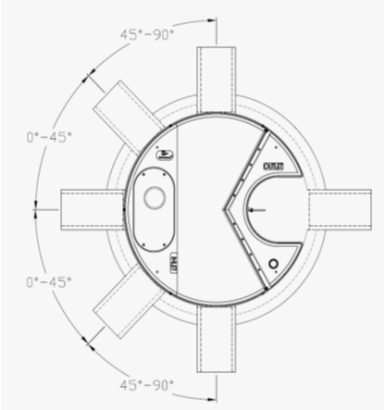

INLET-TO-OUTLET DROP

Elevation differential between inlet and outlet pipe inverts is dictated by the angle at which the inlet pipe(s) enters the unit.

0° - 45° : The inlet pipe is 1-inch (25mm) higher than the outlet pipe.

45° - 90° : The inlet pipe is 2-inches (50mm) higher than the outlet pipe.

HEAD LOSS

The head loss through Stormceptor EF is similar to that of a 60-degree bend structure. The applicable K value for calculating minor losses through the unit is 1.1. For submerged conditions the applicable K value is 3.0.

Pollutant Capacity

Stormceptor EF / EFO	Model Diameter		Depth (Outlet Pipe Invert to Sump Floor)		Oil Volume		Recommended Sediment Maintenance Depth *		Maximum Sediment Volume *		Maximum Sediment Mass **	
	(m)	(ft)	(m)	(ft)	(L)	(Gal)	(mm)	(in)	(L)	(ft³)	(kg)	(lb)
EF4 / EFO4	1.2	4	1.52	5.0	265	70	203	8	1190	42	1904	5250
EF6 / EFO6	1.8	6	1.93	6.3	610	160	305	12	3470	123	5552	15375
EF8 / EFO8	2.4	8	2.59	8.5	1070	280	610	24	8780	310	14048	38750
EF10 / EFO10	3.0	10	3.25	10.7	1670	440	610	24	17790	628	28464	78500
EF12 / EFO12	3.6	12	3.89	12.8	2475	655	610	24	31220	1103	49952	137875

*Increased sump depth may be added to increase sediment storage capacity

** Average density of wet packed sediment in sump = 1.6 kg/L (100 lb/ft³)

Feature	Benefit	Feature Appeals To
Patent-pending enhanced flow treatment and scour prevention technology	Superior, verified third-party performance	Regulator, Specifying & Design Engineer
Third-party verified light liquid capture and retention for EFO version	Proven performance for fuel/oil hotspot locations	Regulator, Specifying & Design Engineer, Site Owner
Functions as bend, junction or inlet structure	Design flexibility	Specifying & Design Engineer
Minimal drop between inlet and outlet	Site installation ease	Contractor
Large diameter outlet riser for inspection and maintenance	Easy maintenance access from grade	Maintenance Contractor & Site Owner

STANDARD STORMCEPTOR EF/EFO DRAWINGS

For standard details, please visit http://www.imbriumsystems.com/stormwater-treatment-solutions/stormceptor-ef

STANDARD STORMCEPTOR EF/EFO SPECIFICATION

For specifications, please visit http://www.imbriumsystems.com/stormwater-treatment-solutions/stormceptor-ef

STANDARD PERFORMANCE SPECIFICATION FOR "OIL GRIT SEPARATOR" (OGS) STORMWATER QUALITY TREATMENT DEVICE

PART 1 – GENERAL

1.1 WORK INCLUDED

This section specifies requirements for selecting, sizing, and designing an underground Oil Grit Separator (OGS) device for stormwater quality treatment, with third-party testing results and a Statement of Verification in accordance with ISO 14034 Environmental Management – Environmental Technology Verification (ETV).

1.2 REFERENCE STANDARDS & PROCEDURES

ISO 14034:2016 Environmental management – Environmental technology verification (ETV)

Canadian Environmental Technology Verification (ETV) Program's **Procedure for Laboratory Testing of Oil-Grit Separators.**

1.3 SUBMITTALS

1.3.1 All submittals, including sizing reports & shop drawings, shall be submitted upon request with each order to the contractor then forwarded to the Engineer of Record for review and acceptance. Shop drawings shall detail all OGS components, elevations, and sequence of construction.

1.3.2 Alternative devices shall have features identical to or greater than the specified device, including: treatment chamber diameter, treatment chamber wet volume, sediment storage volume, and oil storage volume.

1.3.3 Unless directed otherwise by the Engineer of Record, OGS stormwater quality treatment product substitutions or alternatives submitted within ten days prior to project bid shall not be accepted. All alternatives or substitutions submitted shall be signed and sealed by a local registered Professional Engineer, based on the exact same criteria detailed in Section 3, in entirety, subject to review and approval by the Engineer of Record.

PART 2 – PRODUCTS

2.1 OGS POLLUTANT STORAGE

The OGS device shall include a sump for sediment storage, and a protected volume for the capture and storage of petroleum hydrocarbons and buoyant gross pollutants. The **minimum** sediment & petroleum hydrocarbon storage capacity shall be as follows:

2.1.1	4 ft (1219 mm) Diameter OGS Units:	1.19 m^3 sediment / 265 L oil
	6 ft (1829 mm) Diameter OGS Units:	3.48 m^3 sediment / 609 L oil
	8 ft (2438 mm) Diameter OGS Units:	8.78 m^3 sediment / 1,071 L oil
	10 ft (3048 mm) Diameter OGS Units:	17.78 m^3 sediment / 1,673 L oil
	12 ft (3657 mm) Diameter OGS Units:	31.23 m^3 sediment / 2,476 L oil

PART 3 – PERFORMANCE & DESIGN

3.1 GENERAL

The OGS stormwater quality treatment device shall be verified in accordance with ISO 14034:2016 Environmental management – Environmental technology verification (ETV). The OGS stormwater quality treatment device shall remove oil, sediment and gross pollutants from stormwater runoff during frequent wet weather events, and retain these pollutants during less frequent high flow wet weather events below the insert within the OGS for later removal during maintenance. The Manufacturer shall have at least ten (10) years of local experience, history and success in engineering design, manufacturing and production and supply of OGS stormwater quality treatment device systems, acceptable to the Engineer of Record.

3.2 SIZING METHODOLOGY

The OGS device shall be engineered, designed and sized to provide stormwater quality treatment based on treating a minimum of 90 percent of the average annual runoff volume and a minimum removal of an annual average 60% of the sediment (TSS) load based on the Particle Size Distribution (PSD) specified in the sizing report for the specified device. Sizing shall be determined using historical rainfall data and a sediment removal performance curve derived from the actual third-party verified laboratory testing data. The OGS device shall also have sufficient annual sediment storage capacity as specified and calculated in Section 2.1.

3.3 CANADIAN ETV or ISO 14034 ETV VERIFICATION OF SCOUR TESTING

The OGS device shall have Canadian ETV or ISO 14034 ETV Verification of third-party scour testing conducted in accordance with the Canadian ETV Program's **Procedure for Laboratory Testing of Oil-Grit Separators.**

3.3.1 To be acceptable for on-line installation, the OGS device must demonstrate an average scour test effluent concentration less than 10 mg/L at each surface loading rate tested, up to and including 2600 L/min/m^2.

Stormceptor®

Stormceptor® EF Sizing Report

STORMCEPTOR®
ESTIMATED NET ANNUAL SEDIMENT (TSS) LOAD REDUCTION

02/01/2021

Province:	Ontario
City:	Bolton
Nearest Rainfall Station:	TORONTO LESTER B. PEARSON INT'L AP
NCDC Rainfall Station Id:	8733
Years of Rainfall Data:	44

Project Name:	Macville
Project Number:	15-458
Designer Name:	Urbantech Water
Designer Company:	Urbantech
Designer Email:	Urbantech.water@gmail.com
Designer Phone:	905-946-9461
EOR Name:	
EOR Company:	
EOR Email:	
EOR Phone:	

Site Name:	Catchment 104-2(OGS 2 to HW8)
Drainage Area (ha):	1.76
% Imperviousness:	64.00

Runoff Coefficient 'c': 0.68

Particle Size Distribution:	Fine
Target TSS Removal (%):	80.0
Required Water Quality Runoff Volume Capture (%):	90.00
Estimated Water Quality Flow Rate (L/s):	44.79
Oil / Fuel Spill Risk Site?	No
Upstream Flow Control?	No
Peak Conveyance (maximum) Flow Rate (L/s):	
Site Sediment Transport Rate (kg/ha/yr):	

Net Annual Sediment (TSS) Load Reduction Sizing Summary

Stormceptor Model	TSS Removal Provided (%)
EF4	65
EF6	76
EF8	82
EF10	85
EF12	87

Recommended Stormceptor EF Model:	**EF8**
Estimated Net Annual Sediment (TSS) Load Reduction (%):	**82**
Water Quality Runoff Volume Capture (%):	**> 90**

imbrium

THIRD-PARTY TESTING AND VERIFICATION

►**Stormceptor® EF and Stormceptor® EFO** are the latest evolutions in the Stormceptor® oil-grit separator (OGS) technology series, and are designed to remove a wide variety of pollutants from stormwater and snowmelt runoff. These technologies have been third-party tested in accordance with the Canadian ETV **Procedure for Laboratory Testing of Oil-Grit Separators** and performance has been third-party verified in accordance with the **ISO 14034 Environmental Technology Verification (ETV)** protocol.

PERFORMANCE

►**Stormceptor® EF and EFO** remove stormwater pollutants through gravity separation and floatation, and feature a patent-pending design that generates positive removal of total suspended solids (TSS) throughout each storm event, including high-intensity storms. Captured pollutants include sediment, free oils, and sediment-bound pollutants such as nutrients, heavy metals, and petroleum hydrocarbons. Stormceptor is sized to remove a high level of TSS from the frequent rainfall events that contribute the vast majority of annual runoff volume and pollutant load. The technology incorporates an internal bypass to convey excessive stormwater flows from high-intensity storms through the device without resuspension and washout (scour) of previously captured pollutants. Proper routine maintenance ensures high pollutant removal performance and protection of downstream waterwavs.

PARTICLE SIZE DISTRIBUTION (PSD)

►The **Canadian ETV PSD** shown in the table below was used, or in part, for this sizing. This is the identical PSD that is referenced in the Canadian ETV ***Procedure for Laboratory Testing of Oil-Grit Separators*** for both sediment removal testing and scour testing. The Canadian ETV PSD contains a wide range of particle sizes in the sand and silt fractions, and is considered reasonably representative of the particle size fractions found in typical urban stormwater runoff.

Particle Size (μm)	Percent Less Than	Particle Size Fraction (μm)	Percent
1000	100	500-1000	5
500	95	250-500	5
250	90	150-250	15
150	75	100-150	15
100	60	75-100	10
75	50	50-75	5
50	45	20-50	10
20	35	8-20	15
8	20	5-8	10
5	10	2-5	5
2	5	<2	5

Stormceptor® EF Sizing Report

Rainfall Intensity (mm / hr)	Percent Rainfall Volume (%)	Cumulative Rainfall Volume (%)	Flow Rate (L/s)	Flow Rate (L/min)	Surface Loading Rate (L/min/m²)	Removal Efficiency (%)	Incremental Removal (%)	Cumulative Removal (%)
1	49.2	49.2	3.35	201.0	43.0	93	45.8	45.8
2	9.6	58.8	6.69	402.0	85.0	89	8.5	54.3
3	6.3	65.1	10.04	602.0	128.0	85	5.3	59.6
4	4.2	69.3	13.39	803.0	171.0	79	3.3	63.0
5	4.3	73.6	16.73	1004.0	214.0	75	3.2	66.2
6	3.2	76.8	20.08	1205.0	256.0	72	2.3	68.5
7	2.8	79.6	23.43	1406.0	299.0	67	1.9	70.4
8	2.3	81.9	26.77	1606.0	342.0	63	1.5	71.8
9	2.0	83.9	30.12	1807.0	385.0	60	1.2	73.0
10	1.4	85.3	33.47	2008.0	427.0	58	0.8	73.8
11	1.5	86.8	36.81	2209.0	470.0	57	0.9	74.7
12	1.5	88.3	40.16	2410.0	513.0	57	0.9	75.5
13	1.2	89.5	43.51	2610.0	555.0	57	0.7	76.2
14	1.3	90.8	46.85	2811.0	598.0	56	0.7	76.9
15	0.7	91.5	50.20	3012.0	641.0	56	0.4	77.3
16	0.9	92.4	53.55	3213.0	684.0	56	0.5	77.8
17	0.9	93.3	56.89	3414.0	726.0	55	0.5	78.3
18	0.9	94.2	60.24	3614.0	769.0	55	0.5	78.8
19	0.6	94.8	63.59	3815.0	812.0	55	0.3	79.2
20	0.4	95.2	66.93	4016.0	854.0	55	0.2	79.4
21	0.5	95.7	70.28	4217.0	897.0	55	0.3	79.6
22	0.4	96.1	73.63	4418.0	940.0	54	0.2	79.9
23	0.3	96.4	76.97	4618.0	983.0	54	0.2	80.0
24	0.3	96.7	80.32	4819.0	1025.0	54	0.2	80.2
25	0.3	97.0	83.67	5020.0	1068.0	55	0.2	80.4

Rainfall Intensity (mm / hr)	Percent Rainfall Volume (%)	Cumulative Rainfall Volume (%)	Flow Rate (L/s)	Flow Rate (L/min)	Surface Loading Rate (L/min/m²)	Removal Efficiency (%)	Incremental Removal (%)	Cumulative Removal (%)
26	0.4	97.4	87.01	5221.0	1111.0	55	0.2	80.6
27	0.2	97.6	90.36	5422.0	1154.0	56	0.1	80.7
28	0.2	97.8	93.71	5622.0	1196.0	56	0.1	80.8
29	0.3	98.1	97.05	5823.0	1239.0	57	0.2	81.0
30	0.3	98.4	100.40	6024.0	1282.0	58	0.2	81.1
31	0.1	98.5	103.75	6225.0	1324.0	58	0.1	81.2
32	0.2	98.7	107.09	6426.0	1367.0	59	0.1	81.3
33	0.1	98.8	110.44	6626.0	1410.0	59	0.1	81.4
34	0.1	98.9	113.79	6827.0	1453.0	57	0.1	81.4
35	0.1	99.0	117.13	7028.0	1495.0	55	0.1	81.5
36	0.1	99.1	120.48	7229.0	1538.0	54	0.1	81.5
37	0.1	99.2	123.83	7430.0	1581.0	52	0.1	81.6
38	0.1	99.3	127.17	7630.0	1623.0	51	0.1	81.6
39	0.1	99.4	130.52	7831.0	1666.0	50	0.1	81.7
40	0.0	99.4	133.87	8032.0	1709.0	49	0.0	81.7
41	0.0	99.4	137.21	8233.0	1752.0	47	0.0	81.7
42	0.0	99.4	140.56	8434.0	1794.0	46	0.0	81.7
43	0.0	99.4	143.91	8634.0	1837.0	45	0.0	81.7
44	0.1	99.5	147.25	8835.0	1880.0	44	0.0	81.7
45	0.0	99.5	150.60	9036.0	1923.0	43	0.0	81.7
46	0.1	99.6	153.95	9237.0	1965.0	42	0.0	81.8
47	0.0	99.6	157.29	9438.0	2008.0	41	0.0	81.8
48	0.0	99.6	160.64	9638.0	2051.0	40	0.0	81.8
49	0.0	99.6	163.99	9839.0	2093.0	40	0.0	81.8
50	0.0	99.6	167.33	10040.0	2136.0	39	0.0	81.8
Estimated Net Annual Sediment (TSS) Load Reduction =								**82 %**

RAINFALL DATA FROM TORONTO LESTER B. PEARSON INT'L AP RAINFALL STATION

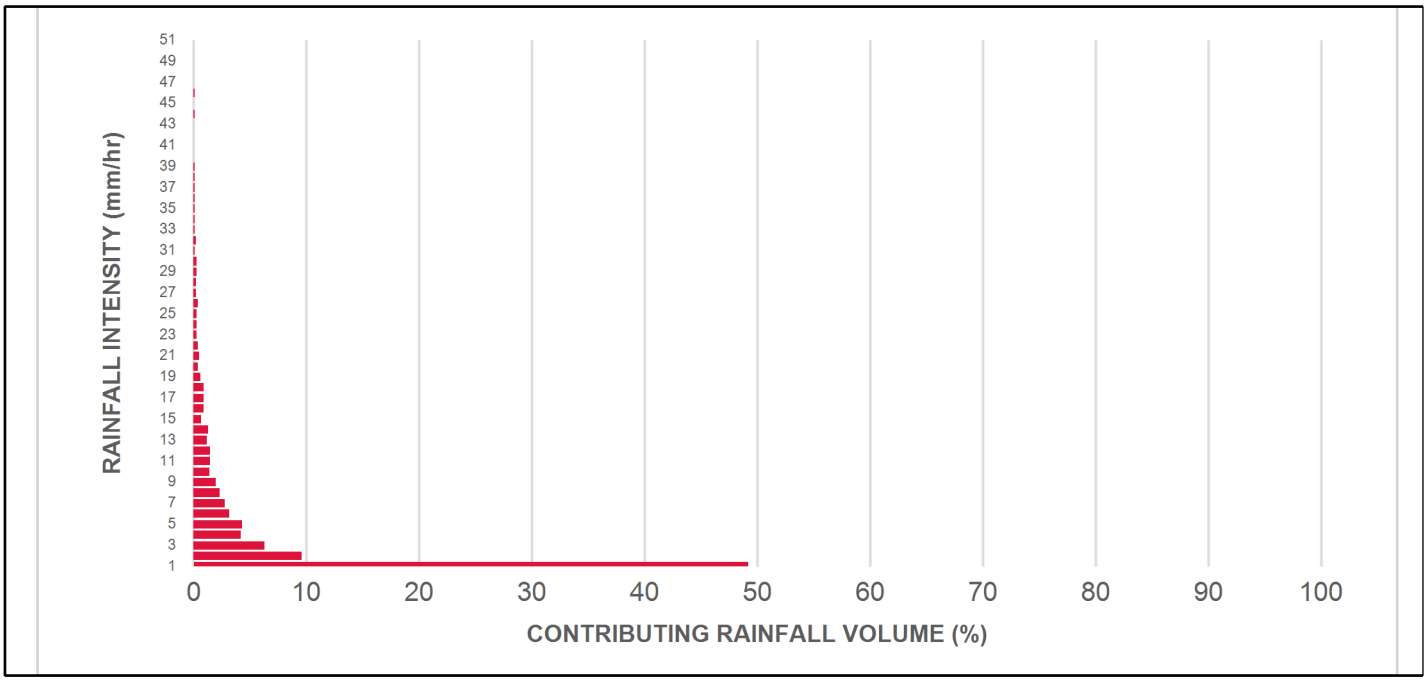

INCREMENTAL AND CUMULATIVE TSS REMOVAL FOR THE RECOMMENDED STORMCEPTOR® MODEL

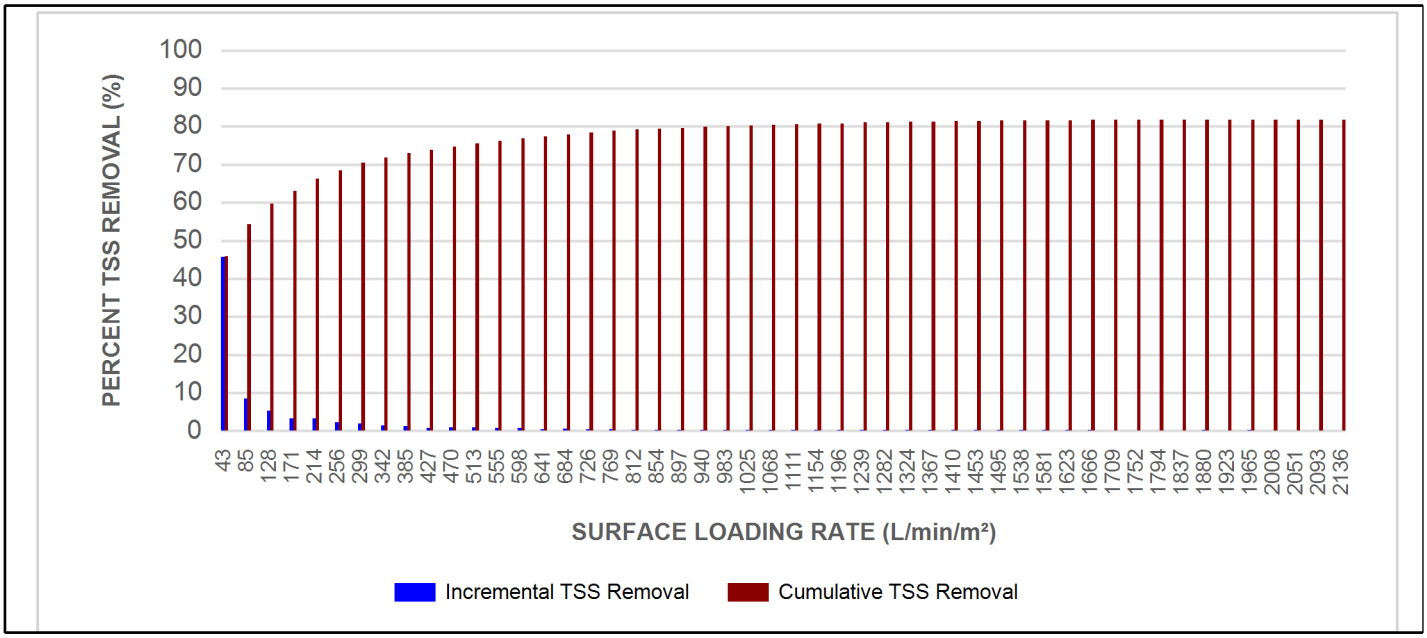

Maximum Pipe Diameter / Peak Conveyance

Stormceptor EF / EFO	Model Diameter		Min Angle Inlet / Outlet Pipes	Max Inlet Pipe Diameter		Max Outlet Pipe Diameter		Peak Conveyance Flow Rate	
	(m)	(ft)		(mm)	(in)	(mm)	(in)	(L/s)	(cfs)
EF4 / EFO4	1.2	4	90	609	24	609	24	425	15
EF6 / EFO6	1.8	6	90	914	36	914	36	990	35
EF8 / EFO8	2.4	8	90	1219	48	1219	48	1700	60
EF10 / EFO10	3.0	10	90	1828	72	1828	72	2830	100
EF12 / EFO12	3.6	12	90	1828	72	1828	72	2830	100

SCOUR PREVENTION AND ONLINE CONFIGURATION

►**Stormceptor® EF and EFO** feature an internal bypass and superior scour prevention technology that have been demonstrated in third-party testing according to the scour testing provisions of the Canadian ETV **Procedure for Laboratory Testing of Oil-Grit Separators**, and the exceptional scour test performance has been third-party verified in accordance with the ISO 14034 ETV protocol. As a result, Stormceptor EF and EFO are approved for online installation, eliminating the need for costly additional bypass structures, piping, and installation expense.

DESIGN FLEXIBILITY

►**Stormceptor® EF** and **EFO** offers design flexibility in one simplified platform, accepting stormwater flow from a single inlet pipe or multiple inlet pipes, and/or surface runoff through an inlet grate. The device can also serve as a junction structure, accommodate a 90-degree inlet-to-outlet bend angle, and can be modified to ensure performance in submerged conditions.

OIL CAPTURE AND RETENTION

►While Stormceptor® EF will capture and retain oil from dry weather spills and low intensity runoff, **Stormceptor® EFO** has demonstrated superior oil capture and greater than 99% oil retention in third-party testing according to the light liquid re-entrainment testing provisions of the Canadian ETV **Procedure for Laboratory Testing of Oil-Grit Separators**. Stormceptor EFO is recommended for sites where oil capture and retention is a requirement.

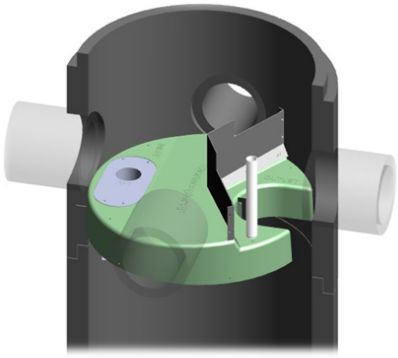

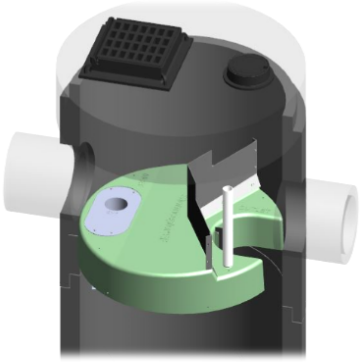

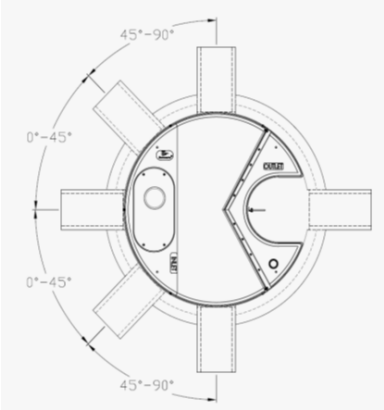

INLET-TO-OUTLET DROP

Elevation differential between inlet and outlet pipe inverts is dictated by the angle at which the inlet pipe(s) enters the unit.

0° - 45° : The inlet pipe is 1-inch (25mm) higher than the outlet pipe.

45° - 90° : The inlet pipe is 2-inches (50mm) higher than the outlet pipe.

HEAD LOSS

The head loss through Stormceptor EF is similar to that of a 60-degree bend structure. The applicable K value for calculating minor losses through the unit is 1.1. For submerged conditions the applicable K value is 3.0.

Pollutant Capacity

Stormceptor EF / EFO	Model Diameter		Depth (Outlet Pipe Invert to Sump Floor)		Oil Volume		Recommended Sediment Maintenance Depth *		Maximum Sediment Volume *		Maximum Sediment Mass **	
	(m)	(ft)	(m)	(ft)	(L)	(Gal)	(mm)	(in)	(L)	(ft³)	(kg)	(lb)
EF4 / EFO4	1.2	4	1.52	5.0	265	70	203	8	1190	42	1904	5250
EF6 / EFO6	1.8	6	1.93	6.3	610	160	305	12	3470	123	5552	15375
EF8 / EFO8	2.4	8	2.59	8.5	1070	280	610	24	8780	310	14048	38750
EF10 / EFO10	3.0	10	3.25	10.7	1670	440	610	24	17790	628	28464	78500
EF12 / EFO12	3.6	12	3.89	12.8	2475	655	610	24	31220	1103	49952	137875

*Increased sump depth may be added to increase sediment storage capacity

** Average density of wet packed sediment in sump = 1.6 kg/L (100 lb/ft³)

Feature	Benefit	Feature Appeals To
Patent-pending enhanced flow treatment and scour prevention technology	Superior, verified third-party performance	Regulator, Specifying & Design Engineer
Third-party verified light liquid capture and retention for EFO version	Proven performance for fuel/oil hotspot locations	Regulator, Specifying & Design Engineer, Site Owner
Functions as bend, junction or inlet structure	Design flexibility	Specifying & Design Engineer
Minimal drop between inlet and outlet	Site installation ease	Contractor
Large diameter outlet riser for inspection and maintenance	Easy maintenance access from grade	Maintenance Contractor & Site Owner

STANDARD STORMCEPTOR EF/EFO DRAWINGS

For standard details, please visit http://www.imbriumsystems.com/stormwater-treatment-solutions/stormceptor-ef

STANDARD STORMCEPTOR EF/EFO SPECIFICATION

For specifications, please visit http://www.imbriumsystems.com/stormwater-treatment-solutions/stormceptor-ef

STANDARD PERFORMANCE SPECIFICATION FOR "OIL GRIT SEPARATOR" (OGS) STORMWATER QUALITY TREATMENT DEVICE

PART 1 – GENERAL

1.1 WORK INCLUDED

This section specifies requirements for selecting, sizing, and designing an underground Oil Grit Separator (OGS) device for stormwater quality treatment, with third-party testing results and a Statement of Verification in accordance with ISO 14034 Environmental Management – Environmental Technology Verification (ETV).

1.2 REFERENCE STANDARDS & PROCEDURES

ISO 14034:2016 Environmental management – Environmental technology verification (ETV)

Canadian Environmental Technology Verification (ETV) Program's **Procedure for Laboratory Testing of Oil-Grit Separators.**

1.3 SUBMITTALS

1.3.1 All submittals, including sizing reports & shop drawings, shall be submitted upon request with each order to the contractor then forwarded to the Engineer of Record for review and acceptance. Shop drawings shall detail all OGS components, elevations, and sequence of construction.

1.3.2 Alternative devices shall have features identical to or greater than the specified device, including: treatment chamber diameter, treatment chamber wet volume, sediment storage volume, and oil storage volume.

1.3.3 Unless directed otherwise by the Engineer of Record, OGS stormwater quality treatment product substitutions or alternatives submitted within ten days prior to project bid shall not be accepted. All alternatives or substitutions submitted shall be signed and sealed by a local registered Professional Engineer, based on the exact same criteria detailed in Section 3, in entirety, subject to review and approval by the Engineer of Record.

PART 2 – PRODUCTS

2.1 OGS POLLUTANT STORAGE

The OGS device shall include a sump for sediment storage, and a protected volume for the capture and storage of petroleum hydrocarbons and buoyant gross pollutants. The **minimum** sediment & petroleum hydrocarbon storage capacity shall be as follows:

2.1.1	4 ft (1219 mm) Diameter OGS Units:	1.19 m^3 sediment / 265 L oil
	6 ft (1829 mm) Diameter OGS Units:	3.48 m^3 sediment / 609 L oil
	8 ft (2438 mm) Diameter OGS Units:	8.78 m^3 sediment / 1,071 L oil
	10 ft (3048 mm) Diameter OGS Units:	17.78 m^3 sediment / 1,673 L oil
	12 ft (3657 mm) Diameter OGS Units:	31.23 m^3 sediment / 2,476 L oil

PART 3 – PERFORMANCE & DESIGN

3.1 GENERAL

The OGS stormwater quality treatment device shall be verified in accordance with ISO 14034:2016 Environmental management – Environmental technology verification (ETV). The OGS stormwater quality treatment device shall remove oil, sediment and gross pollutants from stormwater runoff during frequent wet weather events, and retain these pollutants during less frequent high flow wet weather events below the insert within the OGS for later removal during maintenance. The Manufacturer shall have at least ten (10) years of local experience, history and success in engineering design, manufacturing and production and supply of OGS stormwater quality treatment device systems, acceptable to the Engineer of Record.

3.2 SIZING METHODOLOGY

The OGS device shall be engineered, designed and sized to provide stormwater quality treatment based on treating a minimum of 90 percent of the average annual runoff volume and a minimum removal of an annual average 60% of the sediment (TSS) load based on the Particle Size Distribution (PSD) specified in the sizing report for the specified device. Sizing shall be determined using historical rainfall data and a sediment removal performance curve derived from the actual third-party verified laboratory testing data. The OGS device shall also have sufficient annual sediment storage capacity as specified and calculated in Section 2.1.

3.3 CANADIAN ETV or ISO 14034 ETV VERIFICATION OF SCOUR TESTING

The OGS device shall have Canadian ETV or ISO 14034 ETV Verification of third-party scour testing conducted in accordance with the Canadian ETV Program's **Procedure for Laboratory Testing of Oil-Grit Separators.**

3.3.1 To be acceptable for on-line installation, the OGS device must demonstrate an average scour test effluent concentration less than 10 mg/L at each surface loading rate tested, up to and including 2600 L/min/m^2.

Stormceptor®

Stormceptor® EF Sizing Report

STORMCEPTOR®
ESTIMATED NET ANNUAL SEDIMENT (TSS) LOAD REDUCTION

02/01/2021

Province:	Ontario
City:	Bolton
Nearest Rainfall Station:	TORONTO LESTER B. PEARSON INT'L AP
NCDC Rainfall Station Id:	8733
Years of Rainfall Data:	44

Project Name:	Macville
Project Number:	15-458
Designer Name:	Urbantech Water
Designer Company:	Urbantech
Designer Email:	Urbantech.water@gmail.com
Designer Phone:	905-946-9461
EOR Name:	
EOR Company:	
EOR Email:	
EOR Phone:	

Site Name:	Catchment 104-3 (OGS 3 to HW9)
Drainage Area (ha):	0.54
% Imperviousness:	64.00

Runoff Coefficient 'c': 0.68

Particle Size Distribution:	Fine
Target TSS Removal (%):	80.0
Required Water Quality Runoff Volume Capture (%):	90.00
Estimated Water Quality Flow Rate (L/s):	13.74
Oil / Fuel Spill Risk Site?	No
Upstream Flow Control?	No
Peak Conveyance (maximum) Flow Rate (L/s):	
Site Sediment Transport Rate (kg/ha/yr):	

Net Annual Sediment (TSS) Load Reduction Sizing Summary

Stormceptor Model	TSS Removal Provided (%)
EF4	80
EF6	86
EF8	89
EF10	91
EF12	92

Recommended Stormceptor EF Model:	**EF4**
Estimated Net Annual Sediment (TSS) Load Reduction (%):	**80**
Water Quality Runoff Volume Capture (%):	**> 90**

imbrium

THIRD-PARTY TESTING AND VERIFICATION

►**Stormceptor® EF and Stormceptor® EFO** are the latest evolutions in the Stormceptor® oil-grit separator (OGS) technology series, and are designed to remove a wide variety of pollutants from stormwater and snowmelt runoff. These technologies have been third-party tested in accordance with the Canadian ETV **Procedure for Laboratory Testing of Oil-Grit Separators** and performance has been third-party verified in accordance with the **ISO 14034 Environmental Technology Verification (ETV)** protocol.

PERFORMANCE

►**Stormceptor® EF and EFO** remove stormwater pollutants through gravity separation and floatation, and feature a patent-pending design that generates positive removal of total suspended solids (TSS) throughout each storm event, including high-intensity storms. Captured pollutants include sediment, free oils, and sediment-bound pollutants such as nutrients, heavy metals, and petroleum hydrocarbons. Stormceptor is sized to remove a high level of TSS from the frequent rainfall events that contribute the vast majority of annual runoff volume and pollutant load. The technology incorporates an internal bypass to convey excessive stormwater flows from high-intensity storms through the device without resuspension and washout (scour) of previously captured pollutants. Proper routine maintenance ensures high pollutant removal performance and protection of downstream waterwavs.

PARTICLE SIZE DISTRIBUTION (PSD)

►The **Canadian ETV PSD** shown in the table below was used, or in part, for this sizing. This is the identical PSD that is referenced in the Canadian ETV ***Procedure for Laboratory Testing of Oil-Grit Separators*** for both sediment removal testing and scour testing. The Canadian ETV PSD contains a wide range of particle sizes in the sand and silt fractions, and is considered reasonably representative of the particle size fractions found in typical urban stormwater runoff.

Particle Size (μm)	Percent Less Than	Particle Size Fraction (μm)	Percent
1000	100	500-1000	5
500	95	250-500	5
250	90	150-250	15
150	75	100-150	15
100	60	75-100	10
75	50	50-75	5
50	45	20-50	10
20	35	8-20	15
8	20	5-8	10
5	10	2-5	5
2	5	<2	5

Stormceptor® EF Sizing Report

Rainfall Intensity (mm / hr)	Percent Rainfall Volume (%)	Cumulative Rainfall Volume (%)	Flow Rate (L/s)	Flow Rate (L/min)	Surface Loading Rate (L/min/m²)	Removal Efficiency (%)	Incremental Removal (%)	Cumulative Removal (%)
1	49.2	49.2	1.03	62.0	51.0	92	45.3	45.3
2	9.6	58.8	2.05	123.0	103.0	87	8.3	53.6
3	6.3	65.1	3.08	185.0	154.0	81	5.1	58.7
4	4.2	69.3	4.11	246.0	205.0	76	3.2	61.9
5	4.3	73.6	5.13	308.0	257.0	72	3.1	65.0
6	3.2	76.8	6.16	370.0	308.0	67	2.1	67.1
7	2.8	79.6	7.19	431.0	359.0	62	1.7	68.9
8	2.3	81.9	8.21	493.0	411.0	58	1.3	70.2
9	2.0	83.9	9.24	554.0	462.0	57	1.1	71.3
10	1.4	85.3	10.27	616.0	513.0	57	0.8	72.1
11	1.5	86.8	11.30	678.0	565.0	56	0.8	73.0
12	1.5	88.3	12.32	739.0	616.0	56	0.8	73.8
13	1.2	89.5	13.35	801.0	667.0	56	0.7	74.5
14	1.3	90.8	14.38	863.0	719.0	55	0.7	75.2
15	0.7	91.5	15.40	924.0	770.0	55	0.4	75.6
16	0.9	92.4	16.43	986.0	821.0	55	0.5	76.1
17	0.9	93.3	17.46	1047.0	873.0	55	0.5	76.6
18	0.9	94.2	18.48	1109.0	924.0	54	0.5	77.1
19	0.6	94.8	19.51	1171.0	975.0	54	0.3	77.4
20	0.4	95.2	20.54	1232.0	1027.0	54	0.2	77.6
21	0.5	95.7	21.56	1294.0	1078.0	55	0.3	77.9
22	0.4	96.1	22.59	1355.0	1130.0	56	0.2	78.1
23	0.3	96.4	23.62	1417.0	1181.0	56	0.2	78.3
24	0.3	96.7	24.64	1479.0	1232.0	57	0.2	78.5
25	0.3	97.0	25.67	1540.0	1284.0	58	0.2	78.6

Rainfall Intensity (mm / hr)	Percent Rainfall Volume (%)	Cumulative Rainfall Volume (%)	Flow Rate (L/s)	Flow Rate (L/min)	Surface Loading Rate (L/min/m²)	Removal Efficiency (%)	Incremental Removal (%)	Cumulative Removal (%)
26	0.4	97.4	26.70	1602.0	1335.0	58	0.2	78.9
27	0.2	97.6	27.72	1663.0	1386.0	59	0.1	79.0
28	0.2	97.8	28.75	1725.0	1438.0	58	0.1	79.1
29	0.3	98.1	29.78	1787.0	1489.0	56	0.2	79.3
30	0.3	98.4	30.80	1848.0	1540.0	54	0.2	79.4
31	0.1	98.5	31.83	1910.0	1592.0	52	0.1	79.5
32	0.2	98.7	32.86	1971.0	1643.0	50	0.1	79.6
33	0.1	98.8	33.89	2033.0	1694.0	49	0.0	79.6
34	0.1	98.9	34.91	2095.0	1746.0	47	0.0	79.7
35	0.1	99.0	35.94	2156.0	1797.0	46	0.0	79.7
36	0.1	99.1	36.97	2218.0	1848.0	45	0.0	79.8
37	0.1	99.2	37.99	2280.0	1900.0	43	0.0	79.8
38	0.1	99.3	39.02	2341.0	1951.0	42	0.0	79.8
39	0.1	99.4	40.05	2403.0	2002.0	41	0.0	79.9
40	0.0	99.4	41.07	2464.0	2054.0	40	0.0	79.9
41	0.0	99.4	42.10	2526.0	2105.0	39	0.0	79.9
42	0.0	99.4	43.13	2588.0	2156.0	38	0.0	79.9
43	0.0	99.4	44.15	2649.0	2208.0	38	0.0	79.9
44	0.1	99.5	45.18	2711.0	2259.0	37	0.0	79.9
45	0.0	99.5	46.21	2772.0	2310.0	36	0.0	79.9
46	0.1	99.6	47.23	2834.0	2362.0	35	0.0	80.0
47	0.0	99.6	48.26	2896.0	2413.0	34	0.0	80.0
48	0.0	99.6	49.29	2957.0	2464.0	34	0.0	80.0
49	0.0	99.6	50.31	3019.0	2516.0	33	0.0	80.0
50	0.0	99.6	51.34	3080.0	2567.0	32	0.0	80.0
Estimated Net Annual Sediment (TSS) Load Reduction =								**80 %**

RAINFALL DATA FROM TORONTO LESTER B. PEARSON INT'L AP RAINFALL STATION

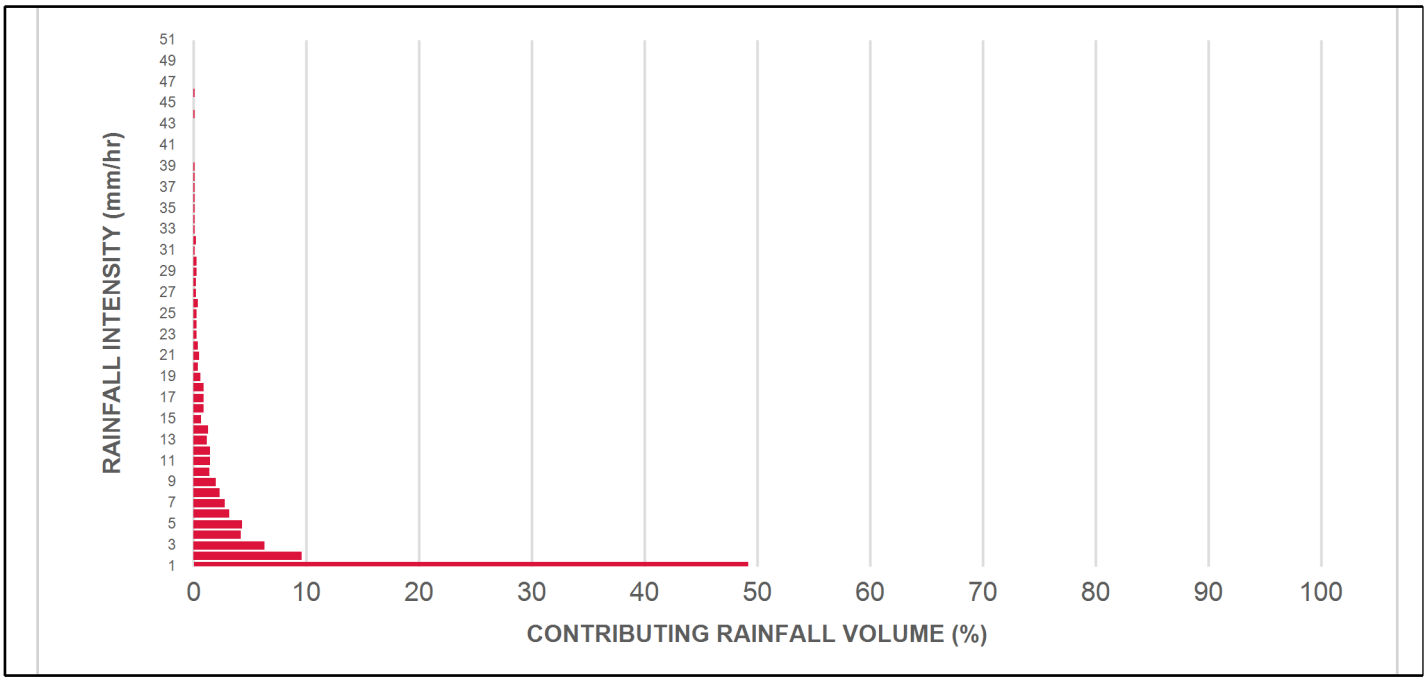

INCREMENTAL AND CUMULATIVE TSS REMOVAL FOR THE RECOMMENDED STORMCEPTOR® MODEL

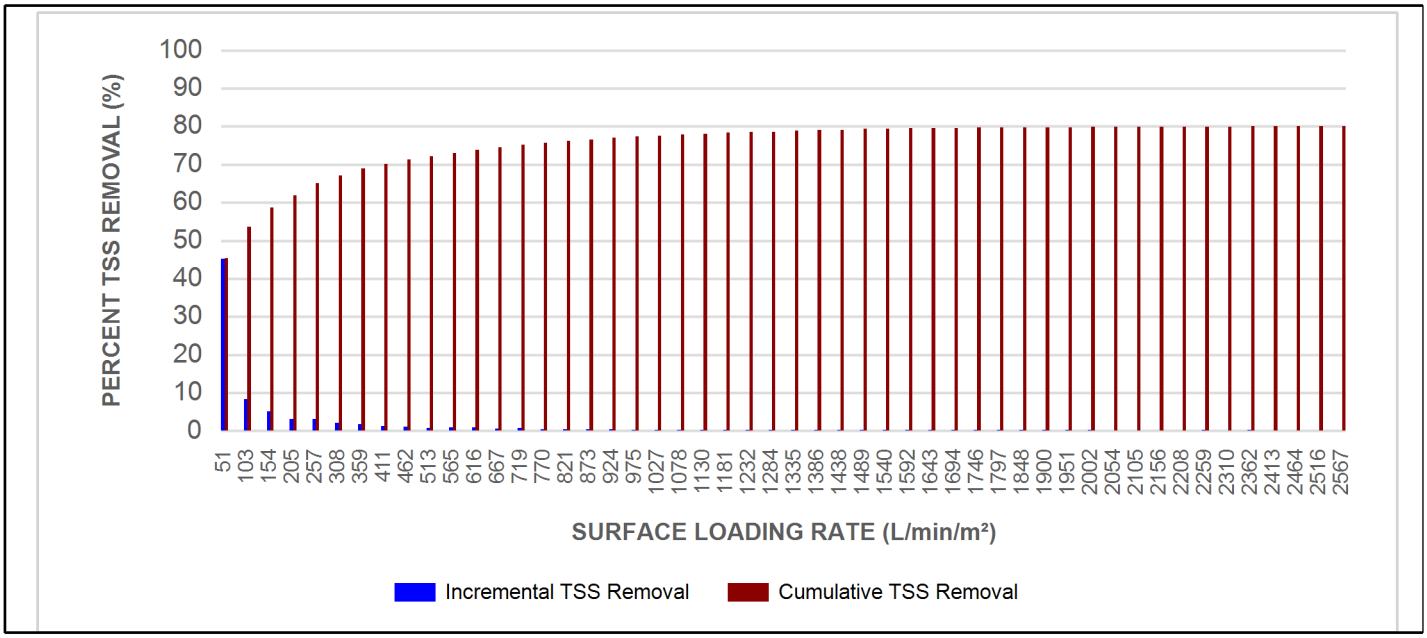

Maximum Pipe Diameter / Peak Conveyance

Stormceptor EF / EFO	Model Diameter		Min Angle Inlet / Outlet Pipes	Max Inlet Pipe Diameter		Max Outlet Pipe Diameter		Peak Conveyance Flow Rate	
	(m)	(ft)		(mm)	(in)	(mm)	(in)	(L/s)	(cfs)
EF4 / EFO4	1.2	4	90	609	24	609	24	425	15
EF6 / EFO6	1.8	6	90	914	36	914	36	990	35
EF8 / EFO8	2.4	8	90	1219	48	1219	48	1700	60
EF10 / EFO10	3.0	10	90	1828	72	1828	72	2830	100
EF12 / EFO12	3.6	12	90	1828	72	1828	72	2830	100

SCOUR PREVENTION AND ONLINE CONFIGURATION

►**Stormceptor® EF and EFO** feature an internal bypass and superior scour prevention technology that have been demonstrated in third-party testing according to the scour testing provisions of the Canadian ETV **Procedure for Laboratory Testing of Oil-Grit Separators**, and the exceptional scour test performance has been third-party verified in accordance with the ISO 14034 ETV protocol. As a result, Stormceptor EF and EFO are approved for online installation, eliminating the need for costly additional bypass structures, piping, and installation expense.

DESIGN FLEXIBILITY

►**Stormceptor® EF** and **EFO** offers design flexibility in one simplified platform, accepting stormwater flow from a single inlet pipe or multiple inlet pipes, and/or surface runoff through an inlet grate. The device can also serve as a junction structure, accommodate a 90-degree inlet-to-outlet bend angle, and can be modified to ensure performance in submerged conditions.

OIL CAPTURE AND RETENTION

►While Stormceptor® EF will capture and retain oil from dry weather spills and low intensity runoff, **Stormceptor® EFO** has demonstrated superior oil capture and greater than 99% oil retention in third-party testing according to the light liquid re-entrainment testing provisions of the Canadian ETV **Procedure for Laboratory Testing of Oil-Grit Separators**. Stormceptor EFO is recommended for sites where oil capture and retention is a requirement.

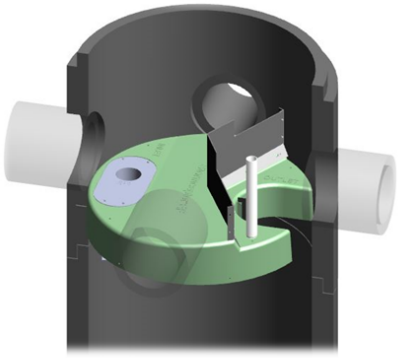

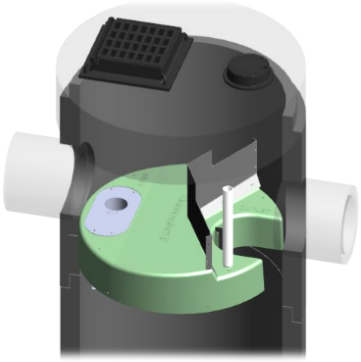

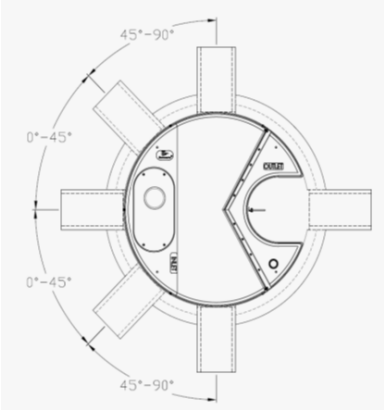

INLET-TO-OUTLET DROP

Elevation differential between inlet and outlet pipe inverts is dictated by the angle at which the inlet pipe(s) enters the unit.

0° - 45° : The inlet pipe is 1-inch (25mm) higher than the outlet pipe.

45° - 90° : The inlet pipe is 2-inches (50mm) higher than the outlet pipe.

HEAD LOSS

The head loss through Stormceptor EF is similar to that of a 60-degree bend structure. The applicable K value for calculating minor losses through the unit is 1.1. For submerged conditions the applicable K value is 3.0.

Pollutant Capacity

Stormceptor EF / EFO	Model Diameter		Depth (Outlet Pipe Invert to Sump Floor)		Oil Volume		Recommended Sediment Maintenance Depth *		Maximum Sediment Volume *		Maximum Sediment Mass **	
	(m)	(ft)	(m)	(ft)	(L)	(Gal)	(mm)	(in)	(L)	(ft³)	(kg)	(lb)
EF4 / EFO4	1.2	4	1.52	5.0	265	70	203	8	1190	42	1904	5250
EF6 / EFO6	1.8	6	1.93	6.3	610	160	305	12	3470	123	5552	15375
EF8 / EFO8	2.4	8	2.59	8.5	1070	280	610	24	8780	310	14048	38750
EF10 / EFO10	3.0	10	3.25	10.7	1670	440	610	24	17790	628	28464	78500
EF12 / EFO12	3.6	12	3.89	12.8	2475	655	610	24	31220	1103	49952	137875

*Increased sump depth may be added to increase sediment storage capacity

** Average density of wet packed sediment in sump = 1.6 kg/L (100 lb/ft³)

Feature	Benefit	Feature Appeals To
Patent-pending enhanced flow treatment and scour prevention technology	Superior, verified third-party performance	Regulator, Specifying & Design Engineer
Third-party verified light liquid capture and retention for EFO version	Proven performance for fuel/oil hotspot locations	Regulator, Specifying & Design Engineer, Site Owner
Functions as bend, junction or inlet structure	Design flexibility	Specifying & Design Engineer
Minimal drop between inlet and outlet	Site installation ease	Contractor
Large diameter outlet riser for inspection and maintenance	Easy maintenance access from grade	Maintenance Contractor & Site Owner

STANDARD STORMCEPTOR EF/EFO DRAWINGS

For standard details, please visit http://www.imbriumsystems.com/stormwater-treatment-solutions/stormceptor-ef

STANDARD STORMCEPTOR EF/EFO SPECIFICATION

For specifications, please visit http://www.imbriumsystems.com/stormwater-treatment-solutions/stormceptor-ef

STANDARD PERFORMANCE SPECIFICATION FOR "OIL GRIT SEPARATOR" (OGS) STORMWATER QUALITY TREATMENT DEVICE

PART 1 – GENERAL

1.1 WORK INCLUDED

This section specifies requirements for selecting, sizing, and designing an underground Oil Grit Separator (OGS) device for stormwater quality treatment, with third-party testing results and a Statement of Verification in accordance with ISO 14034 Environmental Management – Environmental Technology Verification (ETV).

1.2 REFERENCE STANDARDS & PROCEDURES

ISO 14034:2016 Environmental management – Environmental technology verification (ETV)

Canadian Environmental Technology Verification (ETV) Program's **Procedure for Laboratory Testing of Oil-Grit Separators.**

1.3 SUBMITTALS

1.3.1 All submittals, including sizing reports & shop drawings, shall be submitted upon request with each order to the contractor then forwarded to the Engineer of Record for review and acceptance. Shop drawings shall detail all OGS components, elevations, and sequence of construction.

1.3.2 Alternative devices shall have features identical to or greater than the specified device, including: treatment chamber diameter, treatment chamber wet volume, sediment storage volume, and oil storage volume.

1.3.3 Unless directed otherwise by the Engineer of Record, OGS stormwater quality treatment product substitutions or alternatives submitted within ten days prior to project bid shall not be accepted. All alternatives or substitutions submitted shall be signed and sealed by a local registered Professional Engineer, based on the exact same criteria detailed in Section 3, in entirety, subject to review and approval by the Engineer of Record.

PART 2 – PRODUCTS

2.1 OGS POLLUTANT STORAGE

The OGS device shall include a sump for sediment storage, and a protected volume for the capture and storage of petroleum hydrocarbons and buoyant gross pollutants. The **minimum** sediment & petroleum hydrocarbon storage capacity shall be as follows:

2.1.1	4 ft (1219 mm) Diameter OGS Units:	1.19 m^3 sediment / 265 L oil
	6 ft (1829 mm) Diameter OGS Units:	3.48 m^3 sediment / 609 L oil
	8 ft (2438 mm) Diameter OGS Units:	8.78 m^3 sediment / 1,071 L oil
	10 ft (3048 mm) Diameter OGS Units:	17.78 m^3 sediment / 1,673 L oil
	12 ft (3657 mm) Diameter OGS Units:	31.23 m^3 sediment / 2,476 L oil

PART 3 – PERFORMANCE & DESIGN

3.1 GENERAL

The OGS stormwater quality treatment device shall be verified in accordance with ISO 14034:2016 Environmental management – Environmental technology verification (ETV). The OGS stormwater quality treatment device shall remove oil, sediment and gross pollutants from stormwater runoff during frequent wet weather events, and retain these pollutants during less frequent high flow wet weather events below the insert within the OGS for later removal during maintenance. The Manufacturer shall have at least ten (10) years of local experience, history and success in engineering design, manufacturing and production and supply of OGS stormwater quality treatment device systems, acceptable to the Engineer of Record.

3.2 SIZING METHODOLOGY

The OGS device shall be engineered, designed and sized to provide stormwater quality treatment based on treating a minimum of 90 percent of the average annual runoff volume and a minimum removal of an annual average 60% of the sediment (TSS) load based on the Particle Size Distribution (PSD) specified in the sizing report for the specified device. Sizing shall be determined using historical rainfall data and a sediment removal performance curve derived from the actual third-party verified laboratory testing data. The OGS device shall also have sufficient annual sediment storage capacity as specified and calculated in Section 2.1.

3.3 CANADIAN ETV or ISO 14034 ETV VERIFICATION OF SCOUR TESTING

The OGS device shall have Canadian ETV or ISO 14034 ETV Verification of third-party scour testing conducted in accordance with the Canadian ETV Program's **Procedure for Laboratory Testing of Oil-Grit Separators.**

3.3.1 To be acceptable for on-line installation, the OGS device must demonstrate an average scour test effluent concentration less than 10 mg/L at each surface loading rate tested, up to and including 2600 L/min/m^2.

Stormceptor®

Stormceptor® EF Sizing Report

STORMCEPTOR®
ESTIMATED NET ANNUAL SEDIMENT (TSS) LOAD REDUCTION

02/01/2021

Province:	Ontario
City:	Bolton
Nearest Rainfall Station:	TORONTO LESTER B. PEARSON INT'L AP
NCDC Rainfall Station Id:	8733
Years of Rainfall Data:	44

Project Name:	Macville
Project Number:	15-458
Designer Name:	Urbantech Water
Designer Company:	Urbantech
Designer Email:	Urbantech.water@gmail.com
Designer Phone:	905-946-9461
EOR Name:	
EOR Company:	
EOR Email:	
EOR Phone:	

Site Name:	Catchment 104-4 (OGS 4 to HW10)
Drainage Area (ha):	0.26
% Imperviousness:	64.00

Runoff Coefficient 'c': 0.68

Particle Size Distribution:	Fine
Target TSS Removal (%):	80.0
Required Water Quality Runoff Volume Capture (%):	90.00
Estimated Water Quality Flow Rate (L/s):	6.62
Oil / Fuel Spill Risk Site?	No
Upstream Flow Control?	No
Peak Conveyance (maximum) Flow Rate (L/s):	
Site Sediment Transport Rate (kg/ha/yr):	

Net Annual Sediment (TSS) Load Reduction Sizing Summary

Stormceptor Model	TSS Removal Provided (%)
EF4	85
EF6	90
EF8	91
EF10	92
EF12	92

Recommended Stormceptor EF Model:	**EF4**
Estimated Net Annual Sediment (TSS) Load Reduction (%):	**85**
Water Quality Runoff Volume Capture (%):	**> 90**

imbrium

THIRD-PARTY TESTING AND VERIFICATION

►**Stormceptor® EF and Stormceptor® EFO** are the latest evolutions in the Stormceptor® oil-grit separator (OGS) technology series, and are designed to remove a wide variety of pollutants from stormwater and snowmelt runoff. These technologies have been third-party tested in accordance with the Canadian ETV **Procedure for Laboratory Testing of Oil-Grit Separators** and performance has been third-party verified in accordance with the **ISO 14034 Environmental Technology Verification (ETV)** protocol.

PERFORMANCE

►**Stormceptor® EF and EFO** remove stormwater pollutants through gravity separation and floatation, and feature a patent-pending design that generates positive removal of total suspended solids (TSS) throughout each storm event, including high-intensity storms. Captured pollutants include sediment, free oils, and sediment-bound pollutants such as nutrients, heavy metals, and petroleum hydrocarbons. Stormceptor is sized to remove a high level of TSS from the frequent rainfall events that contribute the vast majority of annual runoff volume and pollutant load. The technology incorporates an internal bypass to convey excessive stormwater flows from high-intensity storms through the device without resuspension and washout (scour) of previously captured pollutants. Proper routine maintenance ensures high pollutant removal performance and protection of downstream waterwavs.

PARTICLE SIZE DISTRIBUTION (PSD)

►The **Canadian ETV PSD** shown in the table below was used, or in part, for this sizing. This is the identical PSD that is referenced in the Canadian ETV ***Procedure for Laboratory Testing of Oil-Grit Separators*** for both sediment removal testing and scour testing. The Canadian ETV PSD contains a wide range of particle sizes in the sand and silt fractions, and is considered reasonably representative of the particle size fractions found in typical urban stormwater runoff.

Particle Size (μm)	Percent Less Than	Particle Size Fraction (μm)	Percent
1000	100	500-1000	5
500	95	250-500	5
250	90	150-250	15
150	75	100-150	15
100	60	75-100	10
75	50	50-75	5
50	45	20-50	10
20	35	8-20	15
8	20	5-8	10
5	10	2-5	5
2	5	<2	5

Rainfall Intensity (mm / hr)	Percent Rainfall Volume (%)	Cumulative Rainfall Volume (%)	Flow Rate (L/s)	Flow Rate (L/min)	Surface Loading Rate (L/min/m²)	Removal Efficiency (%)	Incremental Removal (%)	Cumulative Removal (%)
1	49.2	49.2	0.49	30.0	25.0	93	45.8	45.8
2	9.6	58.8	0.99	59.0	49.0	92	8.8	54.6
3	6.3	65.1	1.48	89.0	74.0	90	5.7	60.3
4	4.2	69.3	1.98	119.0	99.0	88	3.7	64.0
5	4.3	73.6	2.47	148.0	124.0	85	3.6	67.6
6	3.2	76.8	2.97	178.0	148.0	83	2.6	70.2
7	2.8	79.6	3.46	208.0	173.0	79	2.2	72.5
8	2.3	81.9	3.96	237.0	198.0	77	1.8	74.2
9	2.0	83.9	4.45	267.0	222.0	74	1.5	75.7
10	1.4	85.3	4.94	297.0	247.0	72	1.0	76.7
11	1.5	86.8	5.44	326.0	272.0	70	1.0	77.8
12	1.5	88.3	5.93	356.0	297.0	68	1.0	78.8
13	1.2	89.5	6.43	386.0	321.0	65	0.8	79.6
14	1.3	90.8	6.92	415.0	346.0	63	0.8	80.4
15	0.7	91.5	7.42	445.0	371.0	61	0.4	80.8
16	0.9	92.4	7.91	475.0	396.0	59	0.5	81.3
17	0.9	93.3	8.40	504.0	420.0	58	0.5	81.9
18	0.9	94.2	8.90	534.0	445.0	58	0.5	82.4
19	0.6	94.8	9.39	564.0	470.0	57	0.3	82.7
20	0.4	95.2	9.89	593.0	494.0	57	0.2	83.0
21	0.5	95.7	10.38	623.0	519.0	57	0.3	83.2
22	0.4	96.1	10.88	653.0	544.0	57	0.2	83.5
23	0.3	96.4	11.37	682.0	569.0	56	0.2	83.6
24	0.3	96.7	11.87	712.0	593.0	56	0.2	83.8
25	0.3	97.0	12.36	742.0	618.0	56	0.2	84.0

Stormceptor® EF Sizing Report

Rainfall Intensity (mm / hr)	Percent Rainfall Volume (%)	Cumulative Rainfall Volume (%)	Flow Rate (L/s)	Flow Rate (L/min)	Surface Loading Rate (L/min/m²)	Removal Efficiency (%)	Incremental Removal (%)	Cumulative Removal (%)
26	0.4	97.4	12.85	771.0	643.0	56	0.2	84.2
27	0.2	97.6	13.35	801.0	667.0	56	0.1	84.3
28	0.2	97.8	13.84	831.0	692.0	56	0.1	84.4
29	0.3	98.1	14.34	860.0	717.0	55	0.2	84.6
30	0.3	98.4	14.83	890.0	742.0	55	0.2	84.8
31	0.1	98.5	15.33	920.0	766.0	55	0.1	84.8
32	0.2	98.7	15.82	949.0	791.0	55	0.1	84.9
33	0.1	98.8	16.32	979.0	816.0	55	0.1	85.0
34	0.1	98.9	16.81	1009.0	840.0	55	0.1	85.0
35	0.1	99.0	17.30	1038.0	865.0	55	0.1	85.1
36	0.1	99.1	17.80	1068.0	890.0	55	0.1	85.1
37	0.1	99.2	18.29	1098.0	915.0	54	0.1	85.2
38	0.1	99.3	18.79	1127.0	939.0	54	0.1	85.2
39	0.1	99.4	19.28	1157.0	964.0	54	0.1	85.3
40	0.0	99.4	19.78	1187.0	989.0	54	0.0	85.3
41	0.0	99.4	20.27	1216.0	1014.0	54	0.0	85.3
42	0.0	99.4	20.76	1246.0	1038.0	54	0.0	85.3
43	0.0	99.4	21.26	1276.0	1063.0	55	0.0	85.3
44	0.1	99.5	21.75	1305.0	1088.0	55	0.1	85.4
45	0.0	99.5	22.25	1335.0	1112.0	55	0.0	85.4
46	0.1	99.6	22.74	1365.0	1137.0	56	0.1	85.4
47	0.0	99.6	23.24	1394.0	1162.0	56	0.0	85.4
48	0.0	99.6	23.73	1424.0	1187.0	56	0.0	85.4
49	0.0	99.6	24.23	1454.0	1211.0	57	0.0	85.4
50	0.0	99.6	24.72	1483.0	1236.0	57	0.0	85.4
Estimated Net Annual Sediment (TSS) Load Reduction =								**85 %**

RAINFALL DATA FROM TORONTO LESTER B. PEARSON INT'L AP RAINFALL STATION

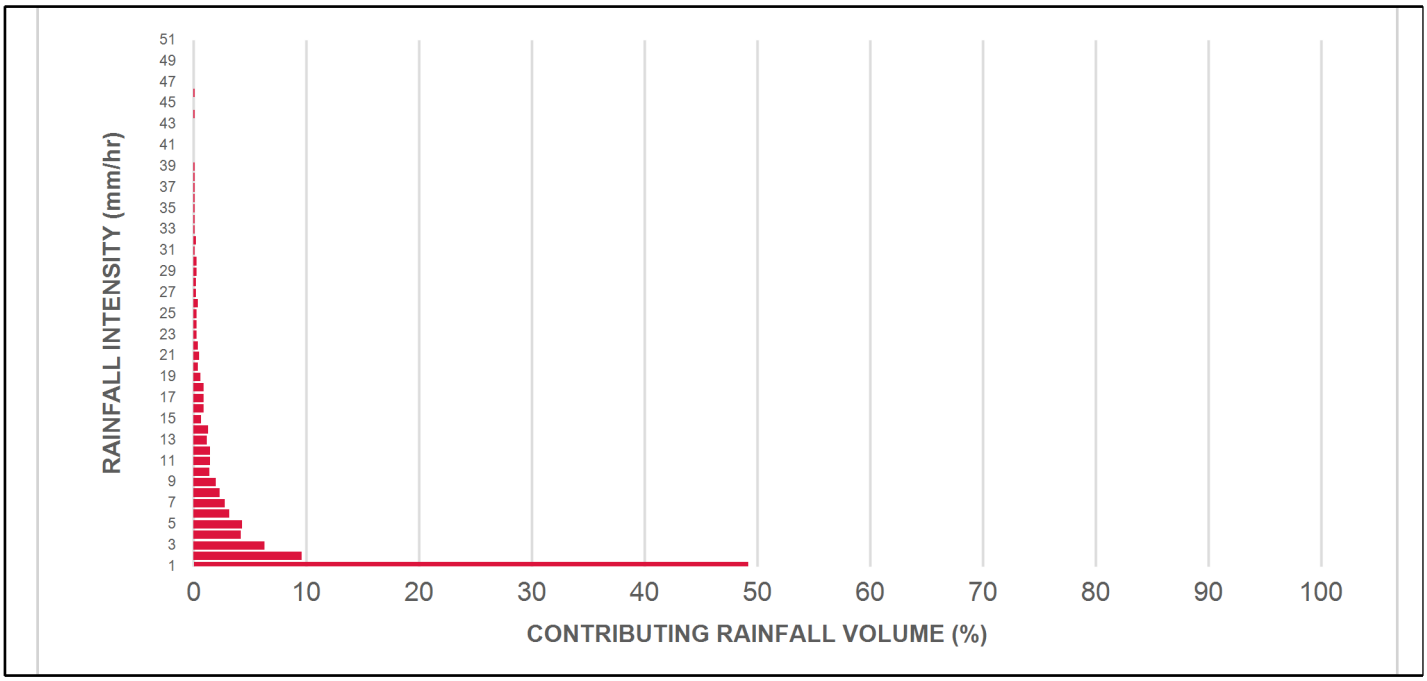

INCREMENTAL AND CUMULATIVE TSS REMOVAL FOR THE RECOMMENDED STORMCEPTOR® MODEL

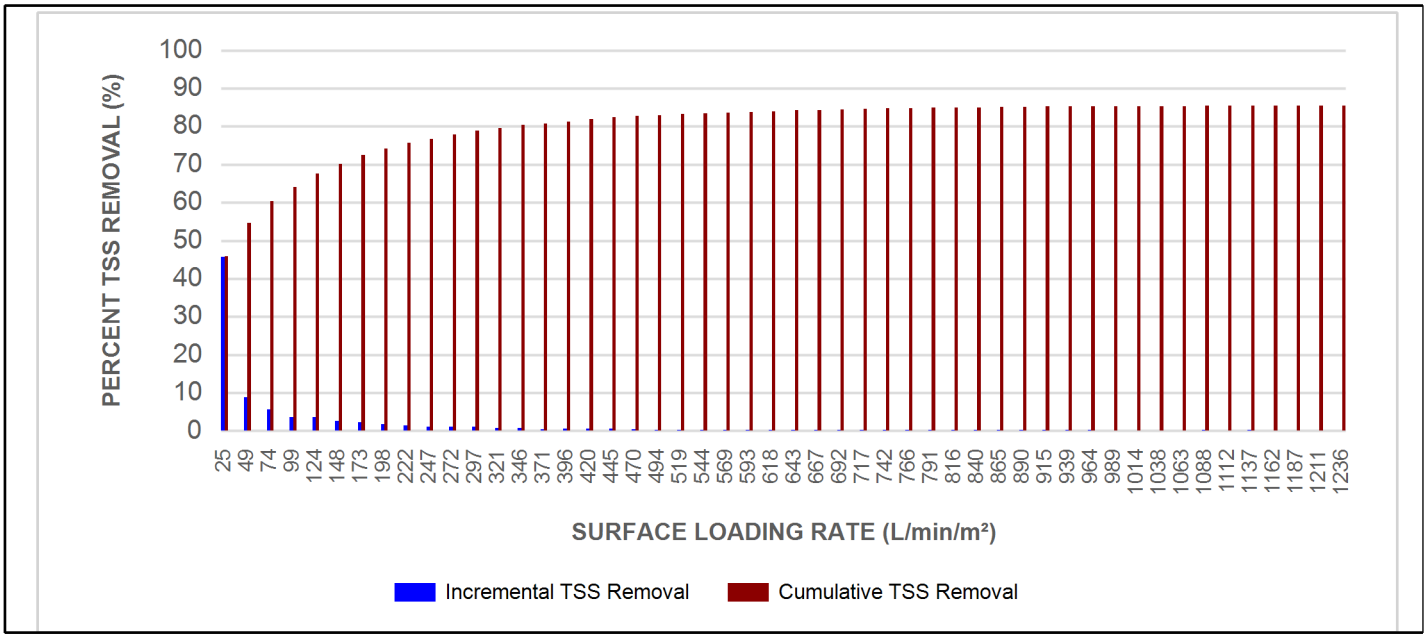

Maximum Pipe Diameter / Peak Conveyance

Stormceptor EF / EFO	Model Diameter		Min Angle Inlet / Outlet Pipes	Max Inlet Pipe Diameter		Max Outlet Pipe Diameter		Peak Conveyance Flow Rate	
	(m)	(ft)		(mm)	(in)	(mm)	(in)	(L/s)	(cfs)
EF4 / EFO4	1.2	4	90	609	24	609	24	425	15
EF6 / EFO6	1.8	6	90	914	36	914	36	990	35
EF8 / EFO8	2.4	8	90	1219	48	1219	48	1700	60
EF10 / EFO10	3.0	10	90	1828	72	1828	72	2830	100
EF12 / EFO12	3.6	12	90	1828	72	1828	72	2830	100

SCOUR PREVENTION AND ONLINE CONFIGURATION

►**Stormceptor® EF and EFO** feature an internal bypass and superior scour prevention technology that have been demonstrated in third-party testing according to the scour testing provisions of the Canadian ETV **Procedure for Laboratory Testing of Oil-Grit Separators**, and the exceptional scour test performance has been third-party verified in accordance with the ISO 14034 ETV protocol. As a result, Stormceptor EF and EFO are approved for online installation, eliminating the need for costly additional bypass structures, piping, and installation expense.

DESIGN FLEXIBILITY

►**Stormceptor® EF** and **EFO** offers design flexibility in one simplified platform, accepting stormwater flow from a single inlet pipe or multiple inlet pipes, and/or surface runoff through an inlet grate. The device can also serve as a junction structure, accommodate a 90-degree inlet-to-outlet bend angle, and can be modified to ensure performance in submerged conditions.

OIL CAPTURE AND RETENTION

►While Stormceptor® EF will capture and retain oil from dry weather spills and low intensity runoff, **Stormceptor® EFO** has demonstrated superior oil capture and greater than 99% oil retention in third-party testing according to the light liquid re-entrainment testing provisions of the Canadian ETV **Procedure for Laboratory Testing of Oil-Grit Separators**. Stormceptor EFO is recommended for sites where oil capture and retention is a requirement.

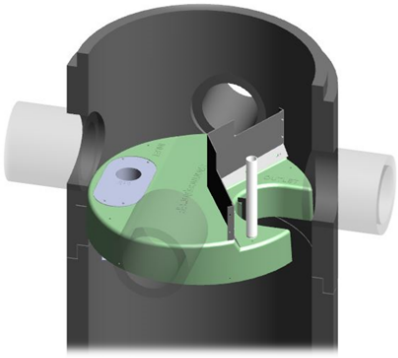

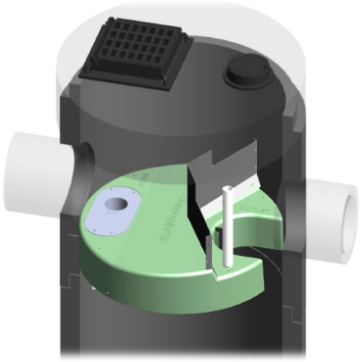

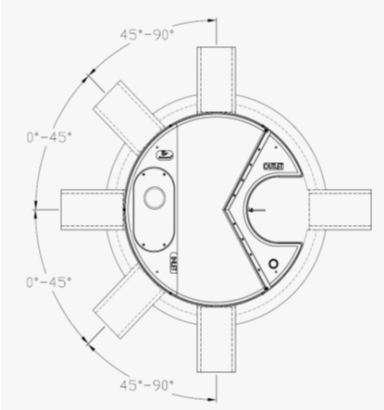

INLET-TO-OUTLET DROP

Elevation differential between inlet and outlet pipe inverts is dictated by the angle at which the inlet pipe(s) enters the unit.

0° - 45° : The inlet pipe is 1-inch (25mm) higher than the outlet pipe.

45° - 90° : The inlet pipe is 2-inches (50mm) higher than the outlet pipe.

HEAD LOSS

The head loss through Stormceptor EF is similar to that of a 60-degree bend structure. The applicable K value for calculating minor losses through the unit is 1.1. For submerged conditions the applicable K value is 3.0.

Pollutant Capacity

Stormceptor EF / EFO	Model Diameter		Depth (Outlet Pipe Invert to Sump Floor)		Oil Volume		Recommended Sediment Maintenance Depth *		Maximum Sediment Volume *		Maximum Sediment Mass **	
	(m)	(ft)	(m)	(ft)	(L)	(Gal)	(mm)	(in)	(L)	(ft³)	(kg)	(lb)
EF4 / EFO4	1.2	4	1.52	5.0	265	70	203	8	1190	42	1904	5250
EF6 / EFO6	1.8	6	1.93	6.3	610	160	305	12	3470	123	5552	15375
EF8 / EFO8	2.4	8	2.59	8.5	1070	280	610	24	8780	310	14048	38750
EF10 / EFO10	3.0	10	3.25	10.7	1670	440	610	24	17790	628	28464	78500
EF12 / EFO12	3.6	12	3.89	12.8	2475	655	610	24	31220	1103	49952	137875

*Increased sump depth may be added to increase sediment storage capacity

** Average density of wet packed sediment in sump = 1.6 kg/L (100 lb/ft³)

Feature	Benefit	Feature Appeals To
Patent-pending enhanced flow treatment and scour prevention technology	Superior, verified third-party performance	Regulator, Specifying & Design Engineer
Third-party verified light liquid capture and retention for EFO version	Proven performance for fuel/oil hotspot locations	Regulator, Specifying & Design Engineer, Site Owner
Functions as bend, junction or inlet structure	Design flexibility	Specifying & Design Engineer
Minimal drop between inlet and outlet	Site installation ease	Contractor
Large diameter outlet riser for inspection and maintenance	Easy maintenance access from grade	Maintenance Contractor & Site Owner

STANDARD STORMCEPTOR EF/EFO DRAWINGS

For standard details, please visit http://www.imbriumsystems.com/stormwater-treatment-solutions/stormceptor-ef

STANDARD STORMCEPTOR EF/EFO SPECIFICATION

For specifications, please visit http://www.imbriumsystems.com/stormwater-treatment-solutions/stormceptor-ef

STANDARD PERFORMANCE SPECIFICATION FOR "OIL GRIT SEPARATOR" (OGS) STORMWATER QUALITY TREATMENT DEVICE

PART 1 – GENERAL

1.1 WORK INCLUDED

This section specifies requirements for selecting, sizing, and designing an underground Oil Grit Separator (OGS) device for stormwater quality treatment, with third-party testing results and a Statement of Verification in accordance with ISO 14034 Environmental Management – Environmental Technology Verification (ETV).

1.2 REFERENCE STANDARDS & PROCEDURES

ISO 14034:2016 Environmental management – Environmental technology verification (ETV)

Canadian Environmental Technology Verification (ETV) Program's **Procedure for Laboratory Testing of Oil-Grit Separators.**

1.3 SUBMITTALS

1.3.1 All submittals, including sizing reports & shop drawings, shall be submitted upon request with each order to the contractor then forwarded to the Engineer of Record for review and acceptance. Shop drawings shall detail all OGS components, elevations, and sequence of construction.

1.3.2 Alternative devices shall have features identical to or greater than the specified device, including: treatment chamber diameter, treatment chamber wet volume, sediment storage volume, and oil storage volume.

1.3.3 Unless directed otherwise by the Engineer of Record, OGS stormwater quality treatment product substitutions or alternatives submitted within ten days prior to project bid shall not be accepted. All alternatives or substitutions submitted shall be signed and sealed by a local registered Professional Engineer, based on the exact same criteria detailed in Section 3, in entirety, subject to review and approval by the Engineer of Record.

PART 2 – PRODUCTS

2.1 OGS POLLUTANT STORAGE

The OGS device shall include a sump for sediment storage, and a protected volume for the capture and storage of petroleum hydrocarbons and buoyant gross pollutants. The **minimum** sediment & petroleum hydrocarbon storage capacity shall be as follows:

2.1.1	4 ft (1219 mm) Diameter OGS Units:	1.19 m^3 sediment / 265 L oil
	6 ft (1829 mm) Diameter OGS Units:	3.48 m^3 sediment / 609 L oil
	8 ft (2438 mm) Diameter OGS Units:	8.78 m^3 sediment / 1,071 L oil
	10 ft (3048 mm) Diameter OGS Units:	17.78 m^3 sediment / 1,673 L oil
	12 ft (3657 mm) Diameter OGS Units:	31.23 m^3 sediment / 2,476 L oil

PART 3 – PERFORMANCE & DESIGN

3.1 GENERAL

The OGS stormwater quality treatment device shall be verified in accordance with ISO 14034:2016 Environmental management – Environmental technology verification (ETV). The OGS stormwater quality treatment device shall remove oil, sediment and gross pollutants from stormwater runoff during frequent wet weather events, and retain these pollutants during less frequent high flow wet weather events below the insert within the OGS for later removal during maintenance. The Manufacturer shall have at least ten (10) years of local experience, history and success in engineering design, manufacturing and production and supply of OGS stormwater quality treatment device systems, acceptable to the Engineer of Record.

3.2 SIZING METHODOLOGY

The OGS device shall be engineered, designed and sized to provide stormwater quality treatment based on treating a minimum of 90 percent of the average annual runoff volume and a minimum removal of an annual average 60% of the sediment (TSS) load based on the Particle Size Distribution (PSD) specified in the sizing report for the specified device. Sizing shall be determined using historical rainfall data and a sediment removal performance curve derived from the actual third-party verified laboratory testing data. The OGS device shall also have sufficient annual sediment storage capacity as specified and calculated in Section 2.1.

3.3 CANADIAN ETV or ISO 14034 ETV VERIFICATION OF SCOUR TESTING

The OGS device shall have Canadian ETV or ISO 14034 ETV Verification of third-party scour testing conducted in accordance with the Canadian ETV Program's **Procedure for Laboratory Testing of Oil-Grit Separators.**

3.3.1 To be acceptable for on-line installation, the OGS device must demonstrate an average scour test effluent concentration less than 10 mg/L at each surface loading rate tested, up to and including 2600 L/min/m^2.

APPENDIX 6-4

HECRAS Summary Output Tables

Digital Files (included as zip folder)

APPENDIX 6-4-1

HECRAS Summary Output Tables

Existing Model Output

Reach	River Sta	Profile	Q Total	Min Ch El	W.S. Elev	Crit W.S.	E.G. Elev	E.G. Slope	Vel Chnl	Flow Area	Top Width	Froude # Chl
			(m3/s)	(m)	(m)	(m)	(m)	(m/m)	(m/s)	(m2)	(m)	
2	5139	2-year	0.09	275.88	275.95	275.95	275.97	0.064736	0.65	0.14	3.43	0.97
2	5139	5-year	0.16	275.88	275.99	275.98	276	0.039825	0.61	0.27	4.81	0.79
2	5139	10-year	0.9	275.88	276.1	276.07	276.14	0.023624	0.86	1.09	7.69	0.71
2	5139	25-year	1.12	275.88	276.12	276.09	276.17	0.023861	0.93	1.25	7.88	0.73
2	5139	50-year	1.3	275.88	276.14	276.1	276.19	0.023255	0.97	1.38	8.04	0.73
2	5139	100-year	1.48	275.88	276.16	276.12	276.21	0.020477	0.98	1.58	8.44	0.7
2	5139	Regional	3.39	275.88	276.3	276.23	276.37	0.021344	1.32	3.08	14.81	0.76
2	5080	2-year	0.09	274.88	275.06	274.98	275.06	0.006913	0.35	0.25	2.51	0.36
2	5080	5-year	0.16	274.88	275.09	275.02	275.1	0.008501	0.44	0.35	2.96	0.41
2	5080	10-year	0.9	274.88	275.27	275.2	275.29	0.010369	0.75	1.44	13.24	0.5
2	5080	25-year	1.12	274.88	275.29	275.24	275.32	0.010431	0.8	1.77	16.24	0.51
2	5080	50-year	1.3	274.88	275.3	275.26	275.33	0.010963	0.85	2	17.53	0.53
2	5080	100-year	1.48	274.88	275.31	275.28	275.34	0.011956	0.91	2.15	17.85	0.56
2	5080	Regional	3.39	274.88	275.4	275.36	275.45	0.013087	1.16	3.94	20.26	0.61
2	5045	2-year	0.09	274.55	274.62		274.63	0.026913	0.39	0.25	7.24	0.62
2	5045	5-year	0.16	274.55	274.64		274.65	0.021823	0.41	0.4	8.5	0.58
2	5045	10-year	0.9	274.55	274.72		274.74	0.026427	0.69	1.42	20.79	0.7
2	5045	25-year	1.12	274.55	274.73		274.75	0.025838	0.72	1.71	22.16	0.71
2	5045	50-year	1.3	274.55	274.74		274.77	0.023368	0.69	2.04	25.03	0.67
2	5045	100-year	1.48	274.55	274.76		274.78	0.020974	0.68	2.36	26.21	0.64
2	5045	Regional	3.39	274.55	274.83		274.86	0.01906	0.9	4.42	33.3	0.66
2	5008	2-year	0.09	274.26	274.33		274.33	0.003859	0.14	0.57	12.97	0.23
2	5008	5-year	0.16	274.26	274.35		274.35	0.004189	0.15	0.86	16.97	0.24
2	5008	10-year	0.9	274.26	274.45		274.45	0.003578	0.22	3.59	41.15	0.25
2	5008	25-year	1.12	274.26	274.47		274.47	0.003689	0.23	4.21	43.12	0.26
2	5008	50-year	1.3	274.26	274.48		274.48	0.003638	0.25	4.68	44.2	0.26
2	5008	100-year	1.48	274.26	274.48		274.49	0.003794	0.27	5.05	45.71	0.27
2	5008	Regional	3.39	274.26	274.56		274.57	0.003747	0.37	8.92	52.44	0.29
2	4946.01	2-year	0.09	273.73	273.83		273.83	0.012997	0.31	0.29	6.58	0.44
2	4946.01	5-year	0.16	273.73	273.85		273.86	0.011337	0.34	0.49	10.8	0.43
2	4946.01	10-year	0.9	273.73	273.92	273.9	273.94	0.017322	0.65	1.78	26.93	0.59
2	4946.01	25-year	1.12	273.73	273.93	273.92	273.95	0.019067	0.72	2.04	28.96	0.63
2	4946.01	50-year	1.3	273.73	273.94	273.93	273.96	0.018991	0.74	2.29	29.29	0.63
2	4946.01	100-year	1.48	273.73	273.95	273.94	273.97	0.018618	0.76	2.53	29.75	0.63
2	4946.01	Regional	3.39	273.73	274.01	273.99	274.04	0.020962	1.01	4.36	34.4	0.71
2	4885.21	2-year	0.09	273.02	273.19		273.2	0.008646	0.26	0.35	6.85	0.36
2	4885.21	5-year	0.16	273.02	273.21		273.22	0.009907	0.32	0.49	8.05	0.4
2	4885.21	10-year	0.9	273.02	273.32		273.33	0.006667	0.47	2.38	29.27	0.38
2	4885.21	25-year	1.12	273.02	273.34		273.34	0.006226	0.49	2.97	34.34	0.38
2	4885.21	50-year	1.3	273.02	273.34		273.35	0.006476	0.52	3.3	38.63	0.39
2	4885.21	100-year	1.48	273.02	273.35		273.36	0.006573	0.54	3.65	40.92	0.39
2	4885.21	Regional	3.39	273.02	273.43		273.44	0.006329	0.66	7.34	55.93	0.41
2	4831.92	2-year	0.09	272.78	272.81		272.81	0.00538	0.08	0.36	5.8	0.22
2	4831.92	5-year	0.16	272.78	272.84		272.85	0.004631	0.13	0.64	9.82	0.24
2	4831.92	10-year	0.9	272.78	272.96		272.96	0.006513	0.32	2.6	28.26	0.34
2	4831.92	25-year	1.12	272.78	272.97		272.97	0.007197	0.36	2.94	30.43	0.37
2	4831.92	50-year	1.3	272.78	272.98		272.99	0.006522	0.37	3.46	35.27	0.36
2	4831.92	100-year	1.48	272.78	272.99	272.92	273	0.006473	0.38	3.82	37.36	0.36
2	4831.92	Regional	3.39	272.78	273.07	272.98	273.08	0.00689	0.53	7.95	64.54	0.4
2	4800.81	2-year	0.09	272.63	272.64	272.6	272.65	0.008675	0.05	0.35	14.91	0.24
2	4800.81	5-year	0.16	272.63	272.66	272.64	272.66	0.008765	0.13	0.74	26.7	0.31
2	4800.81	10-year	0.9	272.63	272.72	272.68	272.72	0.007954	0.28	3.1	50.1	0.36
2	4800.81	25-year	1.12	272.63	272.73	272.69	272.73	0.00817	0.31	3.6	53.41	0.37

Reach	River Sta	Profile	Q Total	Min Ch El	W.S. Elev	Crit W.S.	E.G. Elev	E.G. Slope	Vel Chnl	Flow Area	Top Width	Froude # Chl
			(m3/s)	(m)	(m)	(m)	(m)	(m/m)	(m/s)	(m2)	(m)	
2	4800.81	50-year	1.3	272.63	272.73	272.7	272.74	0.009223	0.34	3.82	55.15	0.4
2	4800.81	100-year	1.48	272.63	272.74		272.74	0.010068	0.37	4.06	56.92	0.42
2	4800.81	Regional	3.39	272.63	272.78		272.79	0.012252	0.55	6.9	67.26	0.5
2	4749.98	2-year	0.09	272.21	272.32		272.32	0.001825	0.13	0.78	19.3	0.17
2	4749.98	5-year	0.16	272.21	272.34		272.34	0.002156	0.17	1.16	30.03	0.19
2	4749.98	10-year	0.9	272.21	272.41		272.41	0.002138	0.26	4.93	64.93	0.22
2	4749.98	25-year	1.12	272.21	272.43		272.43	0.002008	0.27	5.88	67.39	0.21
2	4749.98	50-year	1.3	272.21	272.44		272.44	0.001886	0.27	6.66	69.18	0.21
2	4749.98	100-year	1.48	272.21	272.45		272.45	0.001828	0.28	7.4	70.91	0.21
2	4749.98	Regional	3.39	272.21	272.54		272.55	0.001247	0.3	15.15	88.28	0.18
2	4701.43	2-year	0.09	272.05	272.18		272.18	0.004801	0.19	0.5	11.53	0.27
2	4701.43	5-year	0.16	272.05	272.2		272.2	0.004381	0.2	0.8	14.99	0.26
2	4701.43	10-year	0.9	272.05	272.3		272.31	0.003033	0.32	3.39	32.22	0.26
2	4701.43	25-year	1.12	272.05	272.32		272.33	0.002997	0.34	3.95	32.74	0.26
2	4701.43	50-year	1.3	272.05	272.34		272.34	0.002831	0.35	4.44	33.55	0.26
2	4701.43	100-year	1.48	272.05	272.35		272.36	0.002692	0.35	4.95	35.65	0.25
2	4701.43	Regional	3.39	272.05	272.46		272.47	0.00235	0.45	9.38	44.58	0.25
2	4651.75	2-year	0.09	271.87	272.01		272.01	0.002605	0.15	0.59	10.22	0.2
2	4651.75	5-year	0.16	271.87	272.04		272.04	0.002608	0.18	0.87	13.02	0.21
2	4651.75	10-year	0.9	271.87	272.14		272.15	0.003941	0.38	2.54	19.17	0.3
2	4651.75	25-year	1.12	271.87	272.16		272.17	0.003969	0.42	2.95	19.83	0.3
2	4651.75	50-year	1.3	271.87	272.18		272.18	0.004	0.44	3.25	20.72	0.31
2	4651.75	100-year	1.48	271.87	272.19		272.2	0.004022	0.46	3.55	21.11	0.31
2	4651.75	Regional	3.39	271.87	272.31		272.33	0.003805	0.6	6.52	26.79	0.33
2	4602.06	2-year	0.09	271.67	271.75	271.73	271.76	0.016073	0.35	0.26	5.98	0.49
2	4602.06	5-year	0.16	271.67	271.77	271.75	271.78	0.013861	0.38	0.43	7.99	0.48
2	4602.06	10-year	0.9	271.67	271.91	271.83	271.92	0.006016	0.49	2.07	14.94	0.37
2	4602.06	25-year	1.12	271.67	271.93	271.83	271.95	0.005625	0.51	2.45	15.61	0.37
2	4602.06	50-year	1.3	271.67	271.95	271.87	271.96	0.00546	0.54	2.73	16.14	0.37
2	4602.06	100-year	1.48	271.67	271.97	271.88	271.98	0.005229	0.55	3.02	16.68	0.36
2	4602.06	Regional	3.39	271.67	272.09	271.95	272.11	0.005637	0.75	5.22	20.2	0.4
2	4559.74	2-year	0.09	271.26	271.39		271.39	0.005517	0.23	0.38	6.13	0.3
2	4559.74	5-year	0.16	271.26	271.42	271.35	271.42	0.005726	0.29	0.53	6.43	0.32
2	4559.74	10-year	0.9	271.26	271.51		271.54	0.015802	0.76	1.22	8.92	0.59
2	4559.74	25-year	1.12	271.26	271.52		271.56	0.019678	0.89	1.32	9.49	0.67
2	4559.74	50-year	1.3	271.26	271.53	271.5	271.58	0.019998	0.94	1.46	10.63	0.68
2	4559.74	100-year	1.48	271.26	271.54	271.51	271.59	0.021984	1.02	1.55	11.73	0.72
2	4559.74	Regional	3.39	271.26	271.64	271.64	271.72	0.023095	1.35	3.09	18.85	0.79
2	4492.85	2-year	0.09	270.66	270.74		270.74	0.02172	0.36	0.25	5.99	0.55
2	4492.85	5-year	0.16	270.66	270.75		270.76	0.019697	0.42	0.37	6.67	0.56
2	4492.85	10-year	0.9	270.66	270.9		270.91	0.006476	0.55	2.01	17.46	0.39
2	4492.85	25-year	1.12	270.66	270.93		270.94	0.005683	0.56	2.48	18.22	0.37
2	4492.85	50-year	1.3	270.66	270.94		270.95	0.005651	0.58	2.76	18.63	0.38
2	4492.85	100-year	1.48	270.66	270.96		270.97	0.005355	0.59	3.09	19.64	0.37
2	4492.85	Regional	3.39	270.66	271.08		271.1	0.004777	0.73	5.9	24.33	0.38
2	4460.53	2-year	0.09	270.52	270.62		270.63	0.001309	0.14	0.73	11.27	0.15
2	4460.53	5-year	0.16	270.52	270.65		270.65	0.001359	0.17	1.05	12.96	0.16
2	4460.53	10-year	0.9	270.52	270.77		270.78	0.002449	0.37	2.92	18.18	0.25
2	4460.53	25-year	1.12	270.52	270.79		270.79	0.002893	0.42	3.2	18.54	0.27
2	4460.53	50-year	1.3	270.52	270.8		270.81	0.002928	0.44	3.52	18.94	0.28
2	4460.53	100-year	1.48	270.52	270.82		270.82	0.003146	0.47	3.75	19.29	0.29
2	4460.53	Regional	3.39	270.52	270.91		270.93	0.004894	0.72	5.71	21.86	0.38

Reach	River Sta	Profile	Q Total	Min Ch El	W.S. Elev	Crit W.S.	E.G. Elev	E.G. Slope	Vel Chnl	Flow Area	Top Width	Froude # Chl
			(m3/s)	(m)	(m)	(m)	(m)	(m/m)	(m/s)	(m2)	(m)	
2	4397.62	2-year	0.12	270.27	270.32	270.32	270.33	0.05453	0.4	0.32	15.38	0.81
2	4397.62	5-year	0.2	270.27	270.33	270.33	270.34	0.071429	0.52	0.44	18.63	0.95
2	4397.62	10-year	1.19	270.27	270.4	270.37	270.41	0.02019	0.55	2.44	35.92	0.6
2	4397.62	25-year	1.47	270.27	270.41	270.39	270.43	0.017038	0.56	2.96	36.89	0.57
2	4397.62	50-year	1.69	270.27	270.42	270.39	270.44	0.016843	0.59	3.24	37.22	0.57
2	4397.62	100-year	1.9	270.27	270.43	270.4	270.44	0.016604	0.61	3.51	37.54	0.57
2	4397.62	Regional	4.94	270.27	270.54		270.56	0.008436	0.68	8.06	42.57	0.46
2	4359	2-year	0.12	269.83	269.94		269.94	0.00159	0.15	0.85	15.9	0.17
2	4359	5-year	0.2	269.83	269.96		269.96	0.002064	0.2	1.2	21.35	0.2
2	4359	10-year	1.19	269.83	270.06		270.06	0.003009	0.38	3.94	30.1	0.27
2	4359	25-year	1.47	269.83	270.08		270.08	0.003158	0.41	4.49	30.99	0.28
2	4359	50-year	1.69	269.83	270.09		270.1	0.003074	0.42	4.96	31.54	0.28
2	4359	100-year	1.9	269.83	270.11		270.11	0.003008	0.43	5.41	32.18	0.28
2	4359	Regional	4.94	269.83	270.22		270.24	0.004011	0.64	9.52	43.4	0.34
2	4304.29	2-year	0.12	269.78	269.8		269.8	0.008149	0.06	0.67	27.24	0.25
2	4304.29	5-year	0.2	269.78	269.81		269.81	0.005775	0.1	1.21	35.64	0.25
2	4304.29	10-year	1.19	269.78	269.89		269.89	0.004462	0.25	4.18	45.22	0.28
2	4304.29	25-year	1.47	269.78	269.91		269.91	0.004039	0.28	5.1	47.61	0.28
2	4304.29	50-year	1.69	269.78	269.91		269.92	0.0047	0.31	5.29	47.75	0.3
2	4304.29	100-year	1.9	269.78	269.92		269.92	0.004808	0.32	5.67	48.02	0.31
2	4304.29	Regional	4.94	269.78	270.01		270.02	0.005098	0.5	10.37	54.85	0.35
2	4270.06	2-year	0.12	269.59	269.63	269.63	269.64	0.052745	0.32	0.27	10.74	0.75
2	4270.06	5-year	0.2	269.59	269.64	269.64	269.66	0.068158	0.46	0.36	11.41	0.91
2	4270.06	10-year	1.19	269.59	269.71	269.71	269.74	0.043799	0.78	1.75	29.54	0.88
2	4270.06	25-year	1.47	269.59	269.71	269.71	269.75	0.062653	0.95	1.81	29.79	1.05
2	4270.06	50-year	1.69	269.59	269.72	269.72	269.76	0.050551	0.92	2.12	30.67	0.97
2	4270.06	100-year	1.9	269.59	269.73	269.73	269.77	0.048103	0.95	2.34	32.3	0.95
2	4270.06	Regional	4.94	269.59	269.8	269.8	269.86	0.04137	1.23	4.77	39.52	0.96
2	4228.93	2-year	0.12	269.03	269.17		269.17	0.001444	0.15	0.86	14.23	0.16
2	4228.93	5-year	0.2	269.03	269.21		269.21	0.001124	0.17	1.4	16.06	0.15
2	4228.93	10-year	1.19	269.03	269.38		269.38	0.001086	0.3	5.06	26.72	0.17
2	4228.93	25-year	1.47	269.03	269.41		269.42	0.001112	0.32	5.9	28.59	0.18
2	4228.93	50-year	1.69	269.03	269.43		269.44	0.001097	0.33	6.55	29.73	0.18
2	4228.93	100-year	1.9	269.03	269.46		269.46	0.001068	0.34	7.2	30.57	0.18
2	4228.93	Regional	4.94	269.03	269.67		269.67	0.001002	0.44	15.03	43.62	0.18
2	4207.18	2-year	0.12	268.99	269.13		269.13	0.003027	0.2	0.59	7.71	0.23
2	4207.18	5-year	0.2	268.99	269.16		269.16	0.003164	0.24	0.84	8.47	0.24
2	4207.18	10-year	1.19	268.99	269.34		269.35	0.002856	0.43	2.93	14.93	0.27
2	4207.18	25-year	1.47	268.99	269.37		269.38	0.003021	0.47	3.35	15.67	0.28
2	4207.18	50-year	1.69	268.99	269.39		269.4	0.003021	0.49	3.7	16.55	0.29
2	4207.18	100-year	1.9	268.99	269.41		269.42	0.002964	0.51	4.07	17.41	0.29
2	4207.18	Regional	4.94	268.99	269.62		269.64	0.002756	0.69	8.5	24.39	0.3
2	4168.63	2-year	0.12	268.84	268.96		268.96	0.005714	0.26	0.44	6.03	0.31
2	4168.63	5-year	0.2	268.84	268.99		269	0.005793	0.31	0.64	6.86	0.33
2	4168.63	10-year	1.19	268.84	269.13		269.15	0.010156	0.68	1.75	9.89	0.49
2	4168.63	25-year	1.47	268.84	269.15		269.18	0.011441	0.77	1.95	10.45	0.53
2	4168.63	50-year	1.69	268.84	269.15		269.19	0.014222	0.87	1.99	10.56	0.59
2	4168.63	100-year	1.9	268.84	269.16		269.2	0.015439	0.93	2.1	10.88	0.62
2	4168.63	Regional	4.94	268.84	269.25	269.25	269.38	0.03125	1.66	3.23	13.67	0.93
2	4122.96	2-year	0.12	268.64	268.75		268.75	0.004056	0.22	0.54	7.68	0.26
2	4122.96	5-year	0.2	268.64	268.78		268.78	0.004096	0.27	0.76	8.58	0.28
2	4122.96	10-year	1.19	268.64	268.91		268.91	0.003281	0.37	4.32	45.64	0.28
2	4122.96	25-year	1.47	268.64	268.92		268.93	0.003202	0.38	5.19	49.68	0.28

Reach	River Sta	Profile	Q Total	Min Ch El	W.S. Elev	Crit W.S.	E.G. Elev	E.G. Slope	Vel Chnl	Flow Area	Top Width	Froude # Chl
			(m3/s)	(m)	(m)	(m)	(m)	(m/m)	(m/s)	(m2)	(m)	
2	4122.96	50-year	1.69	268.64	268.94		268.94	0.002969	0.38	5.89	51.43	0.27
2	4122.96	100-year	1.9	268.64	268.95		268.96	0.002774	0.39	6.6	51.98	0.26
2	4122.96	Regional	4.94	268.64	269.08		269.08	0.002113	0.46	14.31	71.37	0.25
2	4045.6	2-year	0.12	268.37	268.49	268.43	268.49	0.00272	0.17	0.68	11.04	0.21
2	4045.6	5-year	0.2	268.37	268.52	268.45	268.52	0.00262	0.21	1	13.01	0.22
2	4045.6	10-year	1.19	268.37	268.65	268.54	268.66	0.003462	0.43	3.09	20.02	0.29
2	4045.6	25-year	1.47	268.37	268.67	268.56	268.68	0.003804	0.48	3.53	22.33	0.31
2	4045.6	50-year	1.69	268.37	268.68	268.56	268.69	0.004008	0.51	3.84	23.08	0.32
2	4045.6	100-year	1.9	268.37	268.7	268.57	268.71	0.004068	0.53	4.17	23.59	0.33
2	4045.6	Regional	4.94	268.37	268.8	268.7	268.83	0.007146	0.87	6.91	29.58	0.46
2	4008.8	2-year	0.12	268.22	268.36	268.29	268.36	0.004584	0.24	0.49	6.64	0.28
2	4008.8	5-year	0.2	268.22	268.39	268.32	268.39	0.005343	0.28	0.74	12.79	0.31
2	4008.8	10-year	1.19	268.22	268.49	268.44	268.5	0.005223	0.45	3.48	42.55	0.35
2	4008.8	25-year	1.47	268.22	268.51	268.45	268.52	0.004887	0.47	4.37	48.95	0.34
2	4008.8	50-year	1.69	268.22	268.52	268.46	268.53	0.004994	0.49	4.89	54.57	0.35
2	4008.8	100-year	1.9	268.22	268.54	268.46	268.55	0.004596	0.49	5.67	57.22	0.34
2	4008.8	Regional	4.94	268.22	268.66	268.54	268.67	0.002752	0.51	13.71	73.53	0.28
2	3962.04	2-year	0.12	267.99	268.13		268.13	0.005729	0.2	0.57	11.78	0.29
2	3962.04	5-year	0.2	267.99	268.15		268.15	0.00523	0.23	0.89	14.44	0.29
2	3962.04	10-year	1.19	267.99	268.27		268.28	0.004039	0.38	3.17	21.25	0.3
2	3962.04	25-year	1.47	267.99	268.3		268.3	0.004071	0.42	3.64	22.11	0.31
2	3962.04	50-year	1.69	267.99	268.31		268.32	0.003911	0.43	4.05	24.8	0.31
2	3962.04	100-year	1.9	267.99	268.33		268.34	0.003983	0.46	4.39	25.92	0.31
2	3962.04	Regional	4.94	267.99	268.49		268.5	0.003332	0.6	9.33	34.83	0.31
2	3890.7	2-year	0.12	267.58	267.74		267.74	0.004965	0.25	0.46	6.19	0.29
2	3890.7	5-year	0.2	267.58	267.77		267.77	0.005617	0.29	0.7	8.26	0.32
2	3890.7	10-year	1.19	267.58	267.9		267.91	0.006565	0.53	2.5	19.02	0.39
2	3890.7	25-year	1.47	267.58	267.92		267.93	0.006873	0.58	2.87	19.57	0.41
2	3890.7	50-year	1.69	267.58	267.93		267.95	0.007189	0.62	3.11	19.92	0.42
2	3890.7	100-year	1.9	267.58	267.95		267.96	0.006914	0.64	3.43	20.39	0.42
2	3890.7	Regional	4.94	267.58	268.06		268.1	0.010075	0.99	5.96	25.63	0.54
2	3844.66	2-year	0.12	267.4	267.48		267.48	0.006896	0.22	0.55	12.93	0.32
2	3844.66	5-year	0.2	267.4	267.5		267.51	0.00592	0.26	0.83	14.18	0.31
2	3844.66	10-year	1.19	267.4	267.61		267.62	0.006699	0.5	2.86	26.41	0.39
2	3844.66	25-year	1.47	267.4	267.63		267.64	0.006507	0.54	3.44	29.13	0.39
2	3844.66	50-year	1.69	267.4	267.64		267.65	0.006264	0.55	3.85	32.63	0.39
2	3844.66	100-year	1.9	267.4	267.65		267.66	0.00674	0.59	4.21	35.21	0.41
2	3844.66	Regional	4.94	267.4	267.77		267.79	0.005235	0.7	9.07	42.36	0.39
2	3805.35	2-year	0.12	267.07	267.23	267.16	267.23	0.00547	0.25	0.47	6.88	0.3
2	3805.35	5-year	0.2	267.07	267.26	267.19	267.26	0.005954	0.29	0.69	10.31	0.33
2	3805.35	10-year	1.19	267.07	267.38	267.31	267.39	0.004353	0.43	3.36	27.68	0.32
2	3805.35	25-year	1.47	267.07	267.4	267.32	267.4	0.004361	0.46	3.91	30.31	0.32
2	3805.35	50-year	1.69	267.07	267.41	267.33	267.42	0.004268	0.47	4.34	32.05	0.32
2	3805.35	100-year	1.9	267.07	267.43	267.34	267.44	0.004204	0.5	4.93	35.24	0.33
2	3805.35	Regional	4.94	267.07	267.54	267.4	267.55	0.005218	0.71	9.57	53.4	0.39
2	3761.64	2-year	0.12	266.88	267		267	0.004695	0.23	0.51	7.51	0.28
2	3761.64	5-year	0.2	266.88	267.02		267.03	0.004935	0.28	0.72	8.98	0.3
2	3761.64	10-year	1.19	266.88	267.13		267.14	0.006204	0.53	2.98	34.45	0.38
2	3761.64	25-year	1.47	266.88	267.15		267.17	0.006002	0.56	3.72	38.22	0.38
2	3761.64	50-year	1.69	266.88	267.16		267.18	0.005974	0.57	4.15	40.29	0.38
2	3761.64	100-year	1.9	266.88	267.17		267.19	0.006374	0.61	4.51	42.59	0.4
2	3761.64	Regional	4.94	266.88	267.3		267.31	0.004206	0.65	10.87	58.53	0.35

Reach	River Sta	Profile	Q Total	Min Ch El	W.S. Elev	Crit W.S.	E.G. Elev	E.G. Slope	Vel Chnl	Flow Area	Top Width	Froude # Chl
			(m3/s)	(m)	(m)	(m)	(m)	(m/m)	(m/s)	(m2)	(m)	
2	3713.08	2-year	0.12	266.62	266.76	266.7	266.76	0.005107	0.24	0.49	8.81	0.29
2	3713.08	5-year	0.2	266.62	266.78	266.73	266.79	0.004815	0.29	0.77	13.44	0.3
2	3713.08	10-year	1.19	266.62	266.92	266.83	266.93	0.004049	0.46	3.07	20.34	0.32
2	3713.08	25-year	1.47	266.62	266.94	266.84	266.95	0.004105	0.5	3.53	21	0.32
2	3713.08	50-year	1.69	266.62	266.96	266.86	266.97	0.004027	0.52	3.9	21.64	0.32
2	3713.08	100-year	1.9	266.62	266.97	266.87	266.99	0.004009	0.54	4.26	22.78	0.33
2	3713.08	Regional	4.94	266.62	267.14	266.96	267.16	0.003855	0.72	9.23	36.88	0.35
2	3662.17	2-year	0.12	266.48	266.59	266.54	266.59	0.002354	0.17	0.75	14.39	0.2
2	3662.17	5-year	0.2	266.48	266.62	266.56	266.62	0.002231	0.2	1.16	17.24	0.2
2	3662.17	10-year	1.19	266.48	266.74	266.63	266.74	0.00301	0.4	3.51	22.19	0.27
2	3662.17	25-year	1.47	266.48	266.76	266.65	266.77	0.002974	0.42	4.09	23.36	0.27
2	3662.17	50-year	1.69	266.48	266.78	266.65	266.78	0.003075	0.45	4.45	24.15	0.28
2	3662.17	100-year	1.9	266.48	266.79	266.66	266.8	0.003143	0.47	4.84	26.79	0.29
2	3662.17	Regional	4.94	266.48	266.94	266.75	266.96	0.003458	0.66	9.63	37.62	0.33
2	3608.28	2-year	0.12	266.37	266.46	266.41	266.46	0.002763	0.13	0.83	17.58	0.2
2	3608.28	5-year	0.2	266.37	266.48	266.43	266.48	0.002421	0.15	1.26	21	0.2
2	3608.28	10-year	1.19	266.37	266.59	266.49	266.6	0.002481	0.31	4.29	30.53	0.24
2	3608.28	25-year	1.47	266.37	266.61	266.5	266.61	0.002822	0.34	4.75	31.4	0.26
2	3608.28	50-year	1.69	266.37	266.62	266.51	266.63	0.002698	0.36	5.27	32.1	0.25
2	3608.28	100-year	1.9	266.37	266.64	266.52	266.64	0.002675	0.37	5.72	32.55	0.26
2	3608.28	Regional	4.94	266.37	266.76	266.59	266.77	0.003283	0.56	10.14	38.58	0.3
2	3558.59	2-year	0.12	266.24	266.3	266.29	266.31	0.008663	0.16	0.6	20.21	0.32
2	3558.59	5-year	0.2	266.24	266.31	266.3	266.32	0.012782	0.23	0.78	21.83	0.41
2	3558.59	10-year	1.19	266.24	266.39	266.35	266.4	0.010326	0.46	2.74	28.51	0.45
2	3558.59	25-year	1.47	266.24	266.41	266.35	266.42	0.008305	0.47	3.39	29.74	0.41
2	3558.59	50-year	1.69	266.24	266.42	266.36	266.43	0.008997	0.51	3.65	30.49	0.44
2	3558.59	100-year	1.9	266.24	266.43	266.37	266.44	0.008948	0.53	3.95	30.81	0.44
2	3558.59	Regional	4.94	266.24	266.54	266.44	266.56	0.007745	0.72	7.91	38.34	0.45
2	3508.9	2-year	0.12	266.05	266.12		266.12	0.001811	0.1	1.14	30.97	0.16
2	3508.9	5-year	0.2	266.05	266.14		266.14	0.001544	0.12	1.78	35.71	0.16
2	3508.9	10-year	1.19	266.05	266.23		266.23	0.001668	0.23	5.75	47.57	0.19
2	3508.9	25-year	1.47	266.05	266.25		266.26	0.001658	0.25	6.82	51.08	0.19
2	3508.9	50-year	1.69	266.05	266.27		266.27	0.001507	0.25	7.66	51.95	0.19
2	3508.9	100-year	1.9	266.05	266.27		266.28	0.001767	0.28	7.86	52.16	0.2
2	3508.9	Regional	4.94	266.05	266.41		266.42	0.001426	0.36	16.05	63.02	0.2
2	3459.49	2-year	0.17	265.69	265.77	265.77	265.79	0.068109	0.64	0.27	6.62	0.99
2	3459.49	5-year	0.3	265.69	265.78	265.78	265.82	0.094855	0.86	0.35	7.73	1.2
2	3459.49	10-year	1.79	265.69	265.89	265.89	265.94	0.035888	1.07	2.02	20.79	0.88
2	3459.49	25-year	2.23	265.69	265.91	265.91	265.96	0.036686	1.15	2.34	22.17	0.9
2	3459.49	50-year	2.56	265.69	265.91	265.91	265.98	0.048108	1.32	2.34	22.19	1.04
2	3459.49	100-year	2.89	265.69	265.94	265.94	265.99	0.025555	1.1	3.24	25.44	0.78
2	3459.49	Regional	7.76	265.69	266.04	266.04	266.14	0.033079	1.62	5.91	30.51	0.95
2	3410	2-year	0.17	264.96	265.14		265.14	0.001173	0.18	0.96	8.14	0.16
2	3410	5-year	0.3	264.96	265.18		265.18	0.001376	0.24	1.35	10.49	0.18
2	3410	10-year	1.79	264.96	265.82		265.82	0.000098	0.17	13.86	30.28	0.06
2	3410	25-year	2.23	264.96	265.84		265.84	0.000136	0.21	14.48	31.36	0.07
2	3410	50-year	2.56	264.96	265.85		265.85	0.000172	0.24	14.76	31.6	0.08
2	3410	100-year	2.89	264.96	265.87		265.87	0.000195	0.25	15.38	31.84	0.09
2	3410	Regional	7.76	264.96	265.97		265.98	0.00081	0.56	19.01	35.77	0.18
2	3359.83	2-year	0.17	264.87	265		265.01	0.00997	0.5	0.37	6.42	0.59
2	3359.83	5-year	0.3	264.87	265.04		265.05	0.006588	0.49	0.72	9.95	0.5
2	3359.83	10-year	1.79	264.87	265.82		265.82	0.000027	0.13	21.62	38.88	0.05
2	3359.83	25-year	2.23	264.87	265.83		265.84	0.000038	0.16	22.39	39.37	0.05

Reach	River Sta	Profile	Q Total	Min Ch El	W.S. Elev	Crit W.S.	E.G. Elev	E.G. Slope	Vel Chnl	Flow Area	Top Width	Froude # Chl
			(m3/s)	(m)	(m)	(m)	(m)	(m/m)	(m/s)	(m2)	(m)	
2	3359.83	50-year	2.56	264.87	265.84		265.84	0.000049	0.18	22.7	39.57	0.06
2	3359.83	100-year	2.89	264.87	265.86		265.86	0.000056	0.2	23.47	40.21	0.07
2	3359.83	Regional	7.76	264.87	265.96		265.96	0.000269	0.46	27.4	42.96	0.15
2	3310.14	2-year	0.17	264.65	264.87	264.75	264.88	0.001176	0.24	0.89	14.35	0.22
2	3310.14	5-year	0.3	264.65	264.9	264.81	264.9	0.001646	0.32	1.32	20.22	0.27
2	3310.14	10-year	1.79	264.65	265.82		265.82	0.000005	0.06	49.12	72.94	0.02
2	3310.14	25-year	2.23	264.65	265.83		265.83	0.000007	0.08	50.56	74.52	0.02
2	3310.14	50-year	2.56	264.65	265.84		265.84	0.000009	0.09	51.15	74.69	0.03
2	3310.14	100-year	2.89	264.65	265.86		265.86	0.00001	0.1	52.58	75.25	0.03
2	3310.14	Regional	7.76	264.65	265.95		265.95	0.000056	0.24	59.8	82.66	0.07
2	3260	2-year	0.17	264.54	264.64	264.64	264.69	0.048027	0.96	0.18	2.93	1.25
2	3260	5-year	0.3	264.54	264.7	264.69	264.72	0.014678	0.71	0.56	13.4	0.74
2	3260	10-year	1.79	264.54	265.81		265.81	0.000005	0.07	46.88	61.61	0.02
2	3260	25-year	2.23	264.54	265.83		265.83	0.000007	0.08	48.08	62	0.02
2	3260	50-year	2.56	264.54	265.84		265.84	0.000008	0.1	48.56	62.15	0.03
2	3260	100-year	2.89	264.54	265.86		265.86	0.00001	0.11	49.76	63.2	0.03
2	3260	Regional	7.76	264.54	265.95		265.95	0.000054	0.26	55.57	66.95	0.07
2	3210.77	2-year	0.17	264.35	264.58		264.58	0.000029	0.04	5.26	36.5	0.03
2	3210.77	5-year	0.3	264.35	264.71		264.71	0.000012	0.04	10.36	44.83	0.03
2	3210.77	10-year	1.79	264.35	265.81		265.81	0.000001	0.03	90.94	95.92	0.01
2	3210.77	25-year	2.23	264.35	265.83		265.83	0.000001	0.04	92.8	96.62	0.01
2	3210.77	50-year	2.56	264.35	265.84		265.84	0.000002	0.05	93.55	96.91	0.01
2	3210.77	100-year	2.89	264.35	265.86		265.86	0.000002	0.05	95.4	97.65	0.01
2	3210.77	Regional	7.76	264.35	265.95		265.95	0.000011	0.13	104.22	101.65	0.03
2	3165.68	2-year	0.17	264.01	264.58	264.12	264.58	0.000005	0.04	5.82	16.2	0.02
2	3165.68	5-year	0.3	264.01	264.71	264.16	264.71	0.000006	0.05	7.94	17.84	0.02
2	3165.68	10-year	1.79	264.01	265.81	264.29	265.81	0.000003	0.07	50.98	72.34	0.02
2	3165.68	25-year	2.23	264.01	265.83	264.32	265.83	0.000004	0.08	52.38	73.18	0.02
2	3165.68	50-year	2.56	264.01	265.84	264.33	265.84	0.000005	0.09	52.94	73.55	0.02
2	3165.68	100-year	2.89	264.01	265.86	264.36	265.86	0.000006	0.1	54.35	74.58	0.03
2	3165.68	Regional	7.76	264.01	265.95	264.53	265.95	0.000035	0.25	61.07	80.33	0.06
2	3155.05	2-year	0.17	263.99	264.58	264.08	264.58	0.000005	0.04	4.64	10.6	0.02
2	3155.05	5-year	0.3	263.99	264.71	264.09	264.71	0.000007	0.06	6.04	11.82	0.02
2	3155.05	10-year	1.79	263.99	265.81	264.23	265.81	0.000004	0.08	42.58	75.46	0.02
2	3155.05	25-year	2.23	263.99	265.83	264.26	265.83	0.000006	0.1	44.04	76.32	0.02
2	3155.05	50-year	2.56	263.99	265.84	264.29	265.84	0.000008	0.12	44.62	76.53	0.03
2	3155.05	100-year	2.89	263.99	265.86	264.3	265.86	0.000009	0.13	46.08	77.47	0.03
2	3155.05	Regional	7.76	263.99	265.95	264.53	265.95	0.000048	0.3	52.98	82.11	0.07
2	3152.41	2-year	0.17	263.92	264.58	264.02	264.58	0.000009	0.06	2.95	8.73	0.02
2	3152.41	5-year	0.3	263.92	264.71	264.06	264.71	0.000014	0.08	3.59	9.52	0.03
2	3152.41	10-year	1.79	263.92	265.81	264.24	265.81	0.000005	0.09	39.84	85.73	0.02
2	3152.41	25-year	2.23	263.92	265.83	264.28	265.83	0.000007	0.11	41.53	90.54	0.03
2	3152.41	50-year	2.56	263.92	265.84	264.3	265.84	0.000009	0.13	42.22	91.23	0.03
2	3152.41	100-year	2.89	263.92	265.86	264.33	265.86	0.000012	0.15	43.95	92.59	0.03
2	3152.41	Regional	7.76	263.92	265.94	264.63	265.95	0.000062	0.34	51.95	95.28	0.08
2	3143.25		Culvert									
2	3133.99	2-year	0.17	263.64	263.83	263.77	263.84	0.006099	0.56	0.31	2.41	0.5
2	3133.99	5-year	0.3	263.64	263.87	263.82	263.9	0.007675	0.72	0.41	2.6	0.58
2	3133.99	10-year	1.79	263.64	264.13	264.08	264.24	0.011997	1.46	1.23	3.68	0.81
2	3133.99	25-year	2.23	263.64	264.28	264.13	264.36	0.005625	1.22	1.83	4.23	0.58
2	3133.99	50-year	2.56	263.64	264.43	264.16	264.48	0.003181	1.06	2.42	4.74	0.45
2	3133.99	100-year	2.89	263.64	264.66	264.19	264.7	0.001278	0.84	3.48	5.68	0.3

Reach	River Sta	Profile	Q Total	Min Ch El	W.S. Elev	Crit W.S.	E.G. Elev	E.G. Slope	Vel Chnl	Flow Area	Top Width	Froude # Chl
			(m3/s)	(m)	(m)	(m)	(m)	(m/m)	(m/s)	(m2)	(m)	
2	3133.99	Regional	7.76	263.64	264.98	264.56	265.11	0.002929	1.59	5.02	7.28	0.48
2	3129.04	2-year	0.19	263.67	263.81	263.75	263.81	0.004512	0.42	0.44	4.15	0.42
2	3129.04	5-year	0.32	263.67	263.85	263.79	263.86	0.004807	0.53	0.61	4.39	0.45
2	3129.04	10-year	1.91	263.67	264.13	263.98	264.17	0.003959	0.96	2.05	5.83	0.49
2	3129.04	25-year	2.39	263.67	264.29	264.02	264.32	0.001905	0.84	3.05	6.56	0.36
2	3129.04	50-year	2.75	263.67	264.43	264.04	264.46	0.001124	0.75	4.04	7.17	0.28
2	3129.04	100-year	3.11	263.67	264.67	264.08	264.69	0.000512	0.61	5.86	8.26	0.2
2	3129.04	Regional	8.44	263.67	265	264.4	265.06	0.001248	1.17	9.01	11.09	0.33
2	3111.39	2-year	0.19	263.6	263.75	263.67	263.75	0.003026	0.31	0.59	6.65	0.33
2	3111.39	5-year	0.32	263.6	263.8	263.71	263.8	0.00199	0.34	0.96	7.2	0.29
2	3111.39	10-year	1.91	263.6	264.1	263.86	264.12	0.001266	0.59	3.46	9.07	0.28
2	3111.39	25-year	2.39	263.6	264.28	263.89	264.29	0.000611	0.51	5.16	10.18	0.21
2	3111.39	50-year	2.75	263.6	264.43	263.91	264.44	0.000377	0.46	6.77	11.46	0.17
2	3111.39	100-year	3.11	263.6	264.67	263.94	264.67	0.000182	0.39	9.75	13.76	0.12
2	3111.39	Regional	8.44	263.6	265.01	264.18	265.03	0.000456	0.74	16.6	29.69	0.2
2	3061.7	2-year	0.19	263.25	263.5	263.45	263.52	0.008589	0.64	0.29	2.34	0.59
2	3061.7	5-year	0.32	263.25	263.5	263.5	263.56	0.025447	1.11	0.29	2.35	1.01
2	3061.7	10-year	1.91	263.25	264.11	263.69	264.11	0.000075	0.17	17.66	43.34	0.07
2	3061.7	25-year	2.39	263.25	264.28	263.71	264.28	0.00004	0.15	26.22	51.21	0.05
2	3061.7	50-year	2.75	263.25	264.43	263.72	264.43	0.000025	0.14	34.2	56.88	0.04
2	3061.7	100-year	3.11	263.25	264.67	263.73	264.67	0.000013	0.11	48.69	66.68	0.03
2	3061.7	Regional	8.44	263.25	265.02	263.85	265.02	0.000031	0.21	74.21	82.25	0.05
2	3022.08	2-year	0.22	262.99	263.19	263.15	263.21	0.007195	0.53	0.41	3.94	0.53
2	3022.08	5-year	0.38	262.99	263.31	263.18	263.32	0.00136	0.36	1.22	8.36	0.26
2	3022.08	10-year	2.21	262.99	264.11	263.38	264.11	0.00002	0.13	32.12	56.57	0.04
2	3022.08	25-year	2.76	262.99	264.28	263.43	264.28	0.000014	0.12	42.77	63.05	0.04
2	3022.08	50-year	3.18	262.99	264.43	263.46	264.43	0.000011	0.11	52.57	67.45	0.03
2	3022.08	100-year	3.61	262.99	264.67	263.48	264.67	0.000006	0.1	69.36	73.81	0.02
2	3022.08	Regional	9.71	262.99	265.02	263.64	265.02	0.000019	0.19	98.42	90.12	0.04
2	3011.93	2-year	0.22	262.85	263.19	262.99	263.19	0.000353	0.23	1.14	8.46	0.14
2	3011.93	5-year	0.38	262.85	263.31	263.03	263.31	0.000266	0.25	1.81	10.12	0.13
2	3011.93	10-year	2.21	262.85	264.1	263.26	264.1	0.000178	0.42	6.18	73.6	0.12
2	3011.93	25-year	2.76	262.85	264.27	263.3	264.28	0.000171	0.46	7.17	76.73	0.12
2	3011.93	50-year	3.18	262.85	264.42	263.33	264.43	0.000158	0.47	7.99	84.25	0.12
2	3011.93	100-year	3.61	262.85	264.66	263.36	264.67	0.000123	0.46	9.32	91.42	0.11
2	3011.93	Regional	9.71	262.85	265.02	263.7	265.02	0.000012	0.16	124.09	110.66	0.04
2	2998.53		Culvert									
2	2934.09	2-year	0.22	262.84	263.01	262.95	263.03	0.003967	0.49	0.44	3.94	0.41
2	2934.09	5-year	0.38	262.84	263.07	262.99	263.09	0.004177	0.62	0.61	4.24	0.45
2	2934.09	10-year	2.21	262.84	263.39	263.25	263.49	0.005726	1.38	1.6	5.28	0.62
2	2934.09	25-year	2.76	262.84	263.44	263.3	263.57	0.006399	1.56	1.77	5.45	0.66
2	2934.09	50-year	3.18	262.84	263.48	263.35	263.63	0.006836	1.69	1.88	5.58	0.69
2	2934.09	100-year	3.61	262.84	263.51	263.39	263.68	0.007383	1.82	1.99	5.69	0.72
2	2934.09	Regional	9.71	262.84	263.87	263.87	264.37	0.012091	3.13	3.1	6.94	1
2	2912.72	2-year	0.22	262.6	262.78	262.78	262.83	0.03224	1.05	0.21	2.19	1.09
2	2912.72	5-year	0.38	262.6	262.83	262.83	262.9	0.024116	1.13	0.33	2.56	1
2	2912.72	10-year	2.21	262.6	263.1	263.1	263.26	0.017797	1.8	1.24	3.99	0.99
2	2912.72	25-year	2.76	262.6	263.16	263.16	263.34	0.016339	1.92	1.47	4.18	0.98
2	2912.72	50-year	3.18	262.6	263.19	263.19	263.4	0.015831	2	1.63	4.3	0.98
2	2912.72	100-year	3.61	262.6	263.23	263.23	263.45	0.015211	2.08	1.79	4.43	0.97
2	2912.72	Regional	9.71	262.6	263.64	263.64	264	0.011464	2.75	3.9	5.88	0.94

Reach	River Sta	Profile	Q Total	Min Ch El	W.S. Elev	Crit W.S.	E.G. Elev	E.G. Slope	Vel Chnl	Flow Area	Top Width	Froude # Chl
			(m3/s)	(m)	(m)	(m)	(m)	(m/m)	(m/s)	(m2)	(m)	
2	2855.23	2-year	0.22	262.13	262.33	262.25	262.33	0.003706	0.4	0.54	4.92	0.38
2	2855.23	5-year	0.38	262.13	262.37	262.3	262.38	0.004051	0.5	0.78	8.34	0.42
2	2855.23	10-year	2.21	262.13	262.53	262.48	262.56	0.005374	0.86	3.18	18.73	0.53
2	2855.23	25-year	2.76	262.13	262.55	262.49	262.59	0.005462	0.91	3.69	18.97	0.54
2	2855.23	50-year	3.18	262.13	262.57	262.51	262.61	0.005785	0.97	3.98	19.11	0.56
2	2855.23	100-year	3.61	262.13	262.59	262.53	262.63	0.005645	0.99	4.35	19.24	0.56
2	2855.23	Regional	9.71	262.13	263.34		263.36	0.000316	0.53	20.15	22.43	0.16
2	2813.79	2-year	0.22	261.77	261.88	261.88	261.91	0.076361	0.73	0.3	6.33	1.07
2	2813.79	5-year	0.38	261.77	261.91	261.91	261.94	0.066298	0.82	0.46	7.34	1.05
2	2813.79	10-year	2.21	261.77	262.05	262.05	262.11	0.030102	1.17	2.2	17.42	0.86
2	2813.79	25-year	2.76	261.77	262.07	262.07	262.14	0.029742	1.24	2.62	18.75	0.88
2	2813.79	50-year	3.18	261.77	262.1	262.1	262.16	0.026568	1.23	3.02	19.3	0.85
2	2813.79	100-year	3.61	261.77	262.1	262.1	262.18	0.030862	1.34	3.13	19.36	0.92
2	2813.79	Regional	9.71	261.77	263.34	262.24	263.34	0.000167	0.33	32.66	27.19	0.09
2	2764.7	2-year	0.22	261.54	261.55		261.55	0.002048	0.03	1.11	20.95	0.16
2	2764.7	5-year	0.38	261.54	261.58		261.58	0.001488	0.08	1.9	29.56	0.18
2	2764.7	10-year	2.21	261.54	261.71		261.71	0.001498	0.29	6.17	35.48	0.25
2	2764.7	25-year	2.76	261.54	261.74		261.75	0.00137	0.32	7.32	36.09	0.25
2	2764.7	50-year	3.18	261.54	261.81		261.81	0.000732	0.29	9.76	36.77	0.19
2	2764.7	100-year	3.61	261.54	261.89		261.89	0.000396	0.26	12.81	37.41	0.15
2	2764.7	Regional	9.71	261.54	263.34		263.34	0.000011	0.14	79.15	49.91	0.03
2	2721.34	2-year	0.22	261.16	261.35	261.35	261.39	0.020298	0.89	0.25	2.43	0.88
2	2721.34	5-year	0.39	261.16	261.39	261.39	261.45	0.025142	1.08	0.36	3.03	1.01
2	2721.34	10-year	2.27	261.16	261.55	261.55	261.59	0.016883	1.12	3.14	30.32	0.88
2	2721.34	25-year	2.84	261.16	261.68		261.69	0.002221	0.52	7.45	35.16	0.34
2	2721.34	50-year	3.28	261.16	261.78		261.79	0.000877	0.41	11.09	40.84	0.22
2	2721.34	100-year	3.73	261.16	261.87		261.88	0.000471	0.35	15.25	46.36	0.17
2	2721.34	Regional	10.12	261.16	263.34		263.34	0.000013	0.16	109.36	93.66	0.04
2	2678.01	2-year	0.22	260.42	260.83	260.63	260.83	0.000314	0.18	1.23	9.81	0.12
2	2678.01	5-year	0.39	260.42	260.93	260.68	260.93	0.000273	0.22	1.8	11.9	0.12
2	2678.01	10-year	2.27	260.42	261.53	260.86	261.53	0.000258	0.43	5.28	45.75	0.14
2	2678.01	25-year	2.84	260.42	261.66	260.9	261.67	0.000257	0.47	6.05	48.25	0.15
2	2678.01	50-year	3.28	260.42	261.75	260.94	261.77	0.000256	0.5	6.61	49.39	0.15
2	2678.01	100-year	3.73	260.42	261.85	260.96	261.86	0.000253	0.52	7.16	51.28	0.15
2	2678.01	Regional	10.12	260.42	263.31	261.29	263.33	0.000137	0.65	15.65	95.16	0.13
2	2664.39		Culvert									
2	2644.21	2-year	0.22	260.5	260.69	260.65	260.7	0.009023	0.51	0.43	5.3	0.57
2	2644.21	5-year	0.39	260.5	260.72	260.68	260.74	0.011282	0.58	0.68	8.14	0.64
2	2644.21	10-year	2.27	260.5	260.86	260.84	260.92	0.015514	1.07	2.14	18.16	0.84
2	2644.21	25-year	2.84	260.5	260.88	260.87	260.95	0.016562	1.19	2.42	19.1	0.88
2	2644.21	50-year	3.28	260.5	260.88	260.88	260.97	0.0216	1.37	2.43	19.15	1.01
2	2644.21	100-year	3.73	260.5	260.9	260.9	261	0.018291	1.37	2.77	21.41	0.95
2	2644.21	Regional	10.12	260.5	261.08	261.08	261.27	0.016293	1.95	5.3	29.04	0.99
2	2614.5	2-year	0.22	260.11	260.26	260.26	260.29	0.022761	0.79	0.28	3.52	0.9
2	2614.5	5-year	0.39	260.11	260.31	260.29	260.34	0.016474	0.78	0.5	5.08	0.79
2	2614.5	10-year	2.27	260.11	260.5	260.48	260.56	0.009506	1.13	2.7	20.76	0.71
2	2614.5	25-year	2.84	260.11	260.54	260.51	260.59	0.008691	1.17	3.41	22.09	0.69
2	2614.5	50-year	3.28	260.11	260.58	260.54	260.62	0.006064	1.07	4.48	25.83	0.59
2	2614.5	100-year	3.73	260.11	260.63	260.55	260.66	0.004394	0.99	5.78	28.21	0.51
2	2614.5	Regional	10.12	260.11	260.8	260.72	260.87	0.005535	1.43	11.7	38.66	0.61
2	2564.81	2-year	0.22	259.73	259.96	259.87	259.96	0.002948	0.37	0.61	5.27	0.34
2	2564.81	5-year	0.39	259.73	260	259.92	260.01	0.003399	0.45	0.86	6.01	0.38

Reach	River Sta	Profile	Q Total	Min Ch El	W.S. Elev	Crit W.S.	E.G. Elev	E.G. Slope	Vel Chnl	Flow Area	Top Width	Froude # Chl
			(m3/s)	(m)	(m)	(m)	(m)	(m/m)	(m/s)	(m2)	(m)	
2	2564.81	10-year	2.27	259.73	260.23	260.11	260.26	0.00408	0.86	3.03	15.37	0.48
2	2564.81	25-year	2.84	259.73	260.26	260.16	260.31	0.004176	0.93	3.63	16.16	0.5
2	2564.81	50-year	3.28	259.73	260.25	260.18	260.31	0.006725	1.15	3.36	15.89	0.62
2	2564.81	100-year	3.73	259.73	260.22	260.2	260.32	0.011553	1.43	2.97	15.1	0.81
2	2564.81	Regional	10.12	259.73	260.63	260.45	260.68	0.002578	1.16	13.77	37.62	0.44
2	2515.12	2-year	0.22	259.48	259.61	259.61	259.64	0.022656	0.77	0.31	5.48	0.89
2	2515.12	5-year	0.39	259.48	259.64	259.64	259.68	0.019864	0.85	0.54	7.92	0.87
2	2515.12	10-year	2.27	259.48	259.78	259.78	259.84	0.025541	1.27	2.07	15.2	1.05
2	2515.12	25-year	2.84	259.48	259.8	259.8	259.88	0.026384	1.4	2.37	16.03	1.09
2	2515.12	50-year	3.28	259.48	259.88	259.82	259.92	0.008817	1.05	3.87	21.38	0.67
2	2515.12	100-year	3.73	259.48	259.97	259.84	260	0.00365	0.83	6.13	26.01	0.45
2	2515.12	Regional	10.12	259.48	260.62	260.02	260.62	0.000363	0.53	29.13	42.33	0.17
2	2493	2-year	0.22	259.12	259.31	259.26	259.32	0.004973	0.4	0.56	6.29	0.43
2	2493	5-year	0.39	259.12	259.36	259.29	259.37	0.004347	0.45	0.87	7.56	0.42
2	2493	10-year	2.27	259.12	259.66	259.45	259.67	0.000909	0.44	6.6	26.66	0.23
2	2493	25-year	2.84	259.12	259.79	259.49	259.79	0.000453	0.38	10.05	29.67	0.17
2	2493	50-year	3.28	259.12	259.88	259.51	259.88	0.000304	0.35	13.02	35.81	0.15
2	2493	100-year	3.73	259.12	259.97	259.53	259.97	0.000219	0.33	16.54	40.77	0.13
2	2493	Regional	10.12	259.12	260.61	259.7	260.62	0.000089	0.32	49.06	57.67	0.09
2	2474	2-year	0.22	258.85	259.05	259.05	259.11	0.025844	1.1	0.2	1.67	1.01
2	2474	5-year	0.39	258.85	259.11	259.11	259.19	0.02655	1.19	0.33	2.44	1.04
2	2474	10-year	2.27	258.85	259.57	259.4	259.63	0.003915	1.2	2.15	30.2	0.51
2	2474	25-year	2.84	258.85	259.71	259.45	259.77	0.002808	1.18	2.75	35.9	0.45
2	2474	50-year	3.28	258.85	259.8	259.48	259.86	0.002353	1.17	3.17	38.84	0.42
2	2474	100-year	3.73	258.85	259.9	259.52	259.96	0.002062	1.18	3.58	44.59	0.4
2	2474	Regional	10.12	258.85	260.61	259.93	260.62	0.000116	0.42	42.95	57.05	0.1
2	2454		Culvert									
2	2429	2-year	0.22	258.92	259.07	259.07	259.11	0.024024	0.87	0.26	2.91	0.94
2	2429	5-year	0.39	258.92	259.11	259.11	259.16	0.023012	1.02	0.38	3.31	0.96
2	2429	10-year	2.27	258.92	259.4	259.34	259.5	0.009611	1.41	1.7	5.77	0.74
2	2429	25-year	2.84	258.92	259.47	259.38	259.57	0.008048	1.45	2.13	6.21	0.7
2	2429	50-year	3.28	258.92	259.52	259.43	259.62	0.007323	1.48	2.43	6.41	0.68
2	2429	100-year	3.73	258.92	259.56	259.47	259.68	0.006756	1.52	2.74	6.61	0.66
2	2429	Regional	10.12	258.92	260.04	259.8	260.2	0.004696	1.93	6.52	17.44	0.62
2	2380	2-year	0.22	258.52	258.84	258.67	258.84	0.000838	0.28	0.8	3.98	0.2
2	2380	5-year	0.39	258.52	258.91	258.72	258.92	0.001055	0.35	1.1	4.47	0.22
2	2380	10-year	2.27	258.52	259.29	258.97	259.32	0.001635	0.79	3.12	6.11	0.32
2	2380	25-year	2.84	258.52	259.35	259.02	259.39	0.001782	0.88	3.55	6.4	0.34
2	2380	50-year	3.28	258.52	259.4	259.05	259.44	0.001881	0.95	3.85	6.59	0.35
2	2380	100-year	3.73	258.52	259.45	259.09	259.5	0.001949	1.01	4.16	6.79	0.36
2	2380	Regional	10.12	258.52	259.89	259.46	260.01	0.002818	1.63	7.67	9.66	0.47
2	2364.8	2-year	0.22	258.55	258.82	258.68	258.83	0.001032	0.31	0.73	3.89	0.22
2	2364.8	5-year	0.39	258.55	258.89	258.73	258.9	0.001178	0.39	1.01	4.19	0.25
2	2364.8	10-year	2.27	258.55	259.26	258.97	259.29	0.00174	0.85	2.82	5.8	0.35
2	2364.8	25-year	2.84	258.55	259.32	259.02	259.36	0.001851	0.93	3.21	6.08	0.36
2	2364.8	50-year	3.28	258.55	259.37	259.06	259.41	0.001922	0.99	3.49	6.29	0.37
2	2364.8	100-year	3.73	258.55	259.41	259.1	259.47	0.00195	1.04	3.78	6.5	0.38
2	2364.8	Regional	10.12	258.55	259.85	259.47	259.97	0.002138	1.47	7.14	9.5	0.43
2	2314	2-year	0.22	258.53	258.75	258.65	258.76	0.001908	0.37	0.6	3.6	0.29
2	2314	5-year	0.39	258.53	258.81	258.69	258.82	0.002512	0.49	0.79	3.82	0.35
2	2314	10-year	2.27	258.53	259.09	258.94	259.15	0.004538	1.15	2.09	5.68	0.53
2	2314	25-year	2.84	258.53	259.13	258.99	259.21	0.005427	1.33	2.3	5.85	0.59

Reach	River Sta	Profile	Q Total	Min Ch El	W.S. Elev	Crit W.S.	E.G. Elev	E.G. Slope	Vel Chnl	Flow Area	Top Width	Froude # Chl
			(m3/s)	(m)	(m)	(m)	(m)	(m/m)	(m/s)	(m2)	(m)	
2	2314	50-year	3.28	258.53	259.13	259.03	259.24	0.006996	1.51	2.33	5.86	0.67
2	2314	100-year	3.73	258.53	259.14	259.07	259.28	0.008663	1.7	2.37	5.89	0.75
2	2314	Regional	10.12	258.53	259.44	259.44	259.75	0.010723	2.57	4.37	7.1	0.9
2	2264.17	2-year	0.22	258.46	258.51	258.5	258.51	0.018344	0.27	0.76	25.29	0.63
2	2264.17	5-year	0.39	258.46	258.53	258.51	258.53	0.016564	0.37	1.25	33.66	0.66
2	2264.17	10-year	2.27	258.46	258.58	258.57	258.6	0.02923	0.68	3.73	56.96	0.95
2	2264.17	25-year	2.84	258.46	258.6	258.58	258.62	0.02372	0.74	4.71	60.58	0.9
2	2264.17	50-year	3.28	258.46	258.62	258.59	258.63	0.015309	0.7	5.94	62.45	0.75
2	2264.17	100-year	3.73	258.46	258.64	258.59	258.65	0.011876	0.7	7.08	63.88	0.68
2	2264.17	Regional	10.12	258.46	258.76	258.67	258.78	0.007272	0.92	15.42	69.36	0.61
2	2213.86	2-year	0.22	258.06	258.17	258.14	258.17	0.00346	0.23	1.33	30.38	0.32
2	2213.86	5-year	0.39	258.06	258.19	258.15	258.19	0.003447	0.26	1.99	35.07	0.34
2	2213.86	10-year	2.27	258.06	258.32	258.21	258.32	0.002188	0.42	7.39	44.2	0.32
2	2213.86	25-year	2.84	258.06	258.34	258.22	258.35	0.002309	0.47	8.4	45.3	0.34
2	2213.86	50-year	3.28	258.06	258.35	258.23	258.36	0.002717	0.52	8.76	45.97	0.37
2	2213.86	100-year	3.73	258.06	258.35	258.24	258.36	0.003415	0.59	8.84	46.05	0.41
2	2213.86	Regional	10.12	258.06	258.53	258.33	258.55	0.003323	0.87	17.84	58.46	0.45
2	2163.54	2-year	0.22	257.79	257.9	257.87	257.91	0.007698	0.45	0.49	6.43	0.52
2	2163.54	5-year	0.39	257.79	257.95	257.9	257.96	0.007211	0.48	0.82	10.3	0.52
2	2163.54	10-year	2.27	257.79	258.03	258.03	258.08	0.016478	1.08	2.87	33.19	0.87
2	2163.54	25-year	2.84	257.79	258.05	258.05	258.1	0.015183	1.12	3.57	34.75	0.85
2	2163.54	50-year	3.28	257.79	258.09	258.06	258.12	0.009804	1	4.68	35.84	0.7
2	2163.54	100-year	3.73	257.79	258.13	258.07	258.16	0.005426	0.85	6.39	38.26	0.53
2	2163.54	Regional	10.12	257.79	258.27	258.19	258.32	0.006343	1.22	12.05	42.94	0.62
2	2113	2-year	0.22	257.5	257.69	257.65	257.69	0.003257	0.4	0.86	14.91	0.36
2	2113	5-year	0.39	257.5	257.72	257.68	257.72	0.003619	0.46	1.37	18.33	0.39
2	2113	10-year	2.27	257.5	257.97	257.78	257.97	0.000305	0.26	12.88	50.47	0.13
2	2113	25-year	2.84	257.5	258.02	257.79	258.03	0.000256	0.26	15.73	51.87	0.13
2	2113	50-year	3.28	257.5	258.08	257.79	258.08	0.000203	0.25	18.62	54.34	0.11
2	2113	100-year	3.73	257.5	258.12	257.8	258.12	0.000183	0.25	20.96	55.72	0.11
2	2113	Regional	10.12	257.5	258.22	257.88	258.23	0.000634	0.53	26.85	58.38	0.21
2	2063	2-year	0.22	257.22	257.36	257.34	257.37	0.016061	0.59	0.47	8.06	0.73
2	2063	5-year	0.39	257.22	257.39	257.37	257.41	0.013357	0.63	0.86	16.16	0.69
2	2063	10-year	2.27	257.22	257.97	257.47	257.97	0.000027	0.11	34.45	74.05	0.04
2	2063	25-year	2.84	257.22	258.02	257.49	258.02	0.00003	0.12	38.59	75.16	0.05
2	2063	50-year	3.28	257.22	258.08	257.5	258.08	0.000029	0.13	42.75	77.22	0.05
2	2063	100-year	3.73	257.22	258.12	257.51	258.12	0.00003	0.13	46.05	78.34	0.05
2	2063	Regional	10.12	257.22	258.22	257.59	258.22	0.000141	0.31	53.77	82.45	0.11
2	2027	2-year	0.25	256.94	257.18	257.08	257.19	0.002629	0.36	0.87	16.03	0.33
2	2027	5-year	0.43	256.94	257.22	257.15	257.23	0.002549	0.37	1.78	31.99	0.33
2	2027	10-year	2.53	256.94	257.97	257.27	257.97	0.000004	0.05	93.85	174.47	0.02
2	2027	25-year	3.16	256.94	258.02	257.29	258.02	0.000004	0.06	103.68	179.56	0.02
2	2027	50-year	3.64	256.94	258.08	257.3	258.08	0.000005	0.06	113.62	185.27	0.02
2	2027	100-year	4.13	256.94	258.12	257.3	258.12	0.000005	0.06	121.49	185.89	0.02
2	2027	Regional	11.29	256.94	258.21	257.39	258.21	0.000025	0.15	140.48	205.81	0.05
2	2010	2-year	0.25	256.89	257.03	257.03	257.07	0.02803	0.98	0.25	2.65	1.02
2	2010	5-year	0.43	256.89	257.1	257.08	257.14	0.012851	0.82	0.52	5.13	0.73
2	2010	10-year	2.53	256.89	257.96	257.3	257.97	0.000115	0.27	9.55	167.37	0.09
2	2010	25-year	3.16	256.89	258.02	257.32	258.02	0.000146	0.32	10.17	168.78	0.11
2	2010	50-year	3.64	256.89	258.07	257.34	258.08	0.00016	0.35	10.78	172.22	0.11
2	2010	100-year	4.13	256.89	258.11	257.36	258.12	0.000179	0.38	11.25	174.17	0.12
2	2010	Regional	11.29	256.89	258.16	257.59	258.21	0.00113	0.99	11.82	177.49	0.31

Reach	River Sta	Profile	Q Total	Min Ch El	W.S. Elev	Crit W.S.	E.G. Elev	E.G. Slope	Vel Chnl	Flow Area	Top Width	Froude # Chl
			(m3/s)	(m)	(m)	(m)	(m)	(m/m)	(m/s)	(m2)	(m)	
2	1992		Culvert									
2	1979	2-year	0.25	256.79	257.01	256.94	257.02	0.00363	0.47	0.54	6	0.4
2	1979	5-year	0.43	256.79	257.07	256.98	257.09	0.002983	0.55	0.84	8.32	0.38
2	1979	10-year	2.53	256.79	257.29	257.22	257.39	0.008506	1.47	1.89	40.17	0.72
2	1979	25-year	3.16	256.79	257.31	257.27	257.45	0.011181	1.74	2	42.34	0.84
2	1979	50-year	3.64	256.79	257.32	257.3	257.49	0.013633	1.95	2.05	42.54	0.93
2	1979	100-year	4.13	256.79	257.34	257.34	257.54	0.014745	2.1	2.17	43.23	0.97
2	1979	Regional	11.29	256.79	257.72	257.72	258.1	0.012742	2.88	4.26	54.46	1
2	1959	2-year	0.25	256.68	256.97		256.98	0.001282	0.34	0.73	3.82	0.25
2	1959	5-year	0.43	256.68	257.04		257.05	0.001479	0.44	1.03	7.9	0.28
2	1959	10-year	2.53	256.68	257.22		257.25	0.003229	0.93	5.37	38.09	0.45
2	1959	25-year	3.16	256.68	257.25		257.28	0.00335	0.99	6.45	40.21	0.46
2	1959	50-year	3.64	256.68	257.27		257.3	0.003329	1.01	7.31	40.96	0.46
2	1959	100-year	4.13	256.68	257.29		257.32	0.003336	1.04	8.06	41.28	0.47
2	1959	Regional	11.29	256.68	257.49		257.52	0.003474	1.32	16.9	49.04	0.5
2	1911.97	2-year	0.25	256.62	256.8	256.79	256.82	0.018732	0.72	0.44	8.32	0.81
2	1911.97	5-year	0.43	256.62	256.82	256.81	256.85	0.025291	0.92	0.67	13.37	0.98
2	1911.97	10-year	2.53	256.62	256.95	256.93	256.99	0.013073	1.09	3.63	27.2	0.78
2	1911.97	25-year	3.16	256.62	256.98	256.95	257.02	0.013017	1.17	4.31	29.44	0.8
2	1911.97	50-year	3.64	256.62	256.99	256.96	257.03	0.013428	1.23	4.68	29.64	0.82
2	1911.97	100-year	4.13	256.62	257	256.96	257.05	0.013063	1.26	5.12	29.87	0.81
2	1911.97	Regional	11.29	256.62	257.17		257.24	0.012465	1.71	10.32	35.2	0.86
2	1861.65	2-year	0.25	256.27	256.36		256.36	0.004378	0.3	1.05	16.43	0.38
2	1861.65	5-year	0.43	256.27	256.39		256.39	0.003854	0.35	1.67	21.55	0.38
2	1861.65	10-year	2.53	256.27	256.51		256.53	0.005299	0.71	5.53	35.05	0.51
2	1861.65	25-year	3.16	256.27	256.54		256.56	0.005077	0.75	6.46	35.66	0.5
2	1861.65	50-year	3.64	256.27	256.56		256.57	0.00512	0.79	7.06	36.04	0.51
2	1861.65	100-year	4.13	256.27	256.57		256.59	0.005122	0.83	7.68	36.86	0.52
2	1861.65	Regional	11.29	256.27	256.76		256.8	0.004851	1.16	15.3	43.67	0.55
2	1811.34	2-year	0.25	256.05	256.17		256.18	0.005517	0.35	0.92	17.19	0.43
2	1811.34	5-year	0.43	256.05	256.2		256.21	0.005199	0.43	1.5	24.54	0.44
2	1811.34	10-year	2.53	256.05	256.35		256.36	0.003201	0.63	6.61	39.64	0.41
2	1811.34	25-year	3.16	256.05	256.37		256.39	0.003343	0.69	7.63	41.85	0.42
2	1811.34	50-year	3.64	256.05	256.4		256.41	0.003153	0.7	8.56	42.71	0.42
2	1811.34	100-year	4.13	256.05	256.42		256.43	0.003066	0.72	9.39	43.46	0.41
2	1811.34	Regional	11.29	256.05	256.61		256.63	0.003057	1	18.8	52.96	0.45
2	1761.02	2-year	0.25	255.86	256.01	255.97	256.02	0.00207	0.29	1.2	20.58	0.28
2	1761.02	5-year	0.43	255.86	256.04	255.99	256.05	0.002048	0.34	1.89	25.07	0.29
2	1761.02	10-year	2.53	255.86	256.2	256.09	256.21	0.002547	0.62	6.63	37.06	0.37
2	1761.02	25-year	3.16	255.86	256.23	256.11	256.24	0.002599	0.68	7.8	39.56	0.38
2	1761.02	50-year	3.64	255.86	256.25	256.12	256.26	0.002736	0.72	8.66	43.21	0.4
2	1761.02	100-year	4.13	255.86	256.27	256.14	256.28	0.002815	0.76	9.48	45.58	0.41
2	1761.02	Regional	11.29	255.86	256.44	256.28	256.46	0.003585	1.11	18.2	58.63	0.49
2	1710.71	2-year	0.25	255.72	255.86		255.87	0.004858	0.39	0.9	16.61	0.42
2	1710.71	5-year	0.43	255.72	255.89		255.9	0.004918	0.47	1.49	26.43	0.45
2	1710.71	10-year	2.53	255.72	256.02		256.04	0.004389	0.75	5.93	43.7	0.48
2	1710.71	25-year	3.16	255.72	256.05		256.06	0.004285	0.79	7.19	52.16	0.48
2	1710.71	50-year	3.64	255.72	256.06		256.08	0.004293	0.82	8.02	56.02	0.49
2	1710.71	100-year	4.13	255.72	256.08		256.09	0.004319	0.85	8.86	60.26	0.49
2	1710.71	Regional	11.29	255.72	256.22		256.25	0.00465	1.14	19	78.71	0.54
2	1660.39	2-year	0.25	255.63	255.67		255.68	0.003426	0.15	1.4	28.65	0.29
2	1660.39	5-year	0.43	255.63	255.69		255.7	0.003721	0.19	2.04	35.77	0.32

Reach	River Sta	Profile	Q Total	Min Ch El	W.S. Elev	Crit W.S.	E.G. Elev	E.G. Slope	Vel Chnl	Flow Area	Top Width	Froude # Chl
			(m3/s)	(m)	(m)	(m)	(m)	(m/m)	(m/s)	(m2)	(m)	
2	1660.39	10-year	2.53	255.63	255.79		255.8	0.005537	0.54	6.03	48.68	0.48
2	1660.39	25-year	3.16	255.63	255.8		255.82	0.005712	0.6	6.95	50.47	0.5
2	1660.39	50-year	3.64	255.63	255.82		255.83	0.005641	0.64	7.77	51.86	0.51
2	1660.39	100-year	4.13	255.63	255.83		255.85	0.005498	0.67	8.5	52.27	0.51
2	1660.39	Regional	11.29	255.63	255.99		256.02	0.004923	0.96	17.4	62.09	0.53
2	1610.08	2-year	0.25	255.38	255.44		255.44	0.006351	0.19	1.23	30.61	0.39
2	1610.08	5-year	0.45	255.38	255.46		255.47	0.005136	0.2	2.04	37.73	0.36
2	1610.08	10-year	2.61	255.38	255.58		255.59	0.003248	0.43	8	57.7	0.37
2	1610.08	25-year	3.27	255.38	255.61		255.61	0.002983	0.47	9.49	58.85	0.37
2	1610.08	50-year	3.77	255.38	255.62		255.63	0.002914	0.49	10.47	60.04	0.37
2	1610.08	100-year	4.29	255.38	255.64		255.65	0.002998	0.52	11.26	60.81	0.38
2	1610.08	Regional	12	255.38	255.82		255.84	0.002456	0.74	23.12	65.93	0.38
2	1559	2-year	0.25	255.06	255.24	255.19	255.25	0.003392	0.33	0.98	17.62	0.35
2	1559	5-year	0.45	255.06	255.27	255.23	255.27	0.004046	0.42	1.43	19.96	0.4
2	1559	10-year	2.61	255.06	255.41		255.43	0.00409	0.74	5.49	39.64	0.46
2	1559	25-year	3.27	255.06	255.45		255.47	0.003909	0.78	6.89	41.68	0.46
2	1559	50-year	3.77	255.06	255.46		255.48	0.00393	0.81	7.61	42.54	0.47
2	1559	100-year	4.29	255.06	255.48		255.5	0.003976	0.85	8.33	43.1	0.48
2	1559	Regional	12	255.06	255.67		255.7	0.004123	1.17	17	52.07	0.52
2	1509	2-year	0.25	254.93	254.99	254.96	254.99	0.010874	0.28	0.78	13.58	0.53
2	1509	5-year	0.45	254.93	255.02	254.98	255.03	0.007222	0.34	1.31	17.9	0.47
2	1509	10-year	2.61	254.93	255.16	255.09	255.17	0.00817	0.71	4.69	33.28	0.6
2	1509	25-year	3.27	254.93	255.18	255.1	255.2	0.008922	0.83	5.67	38.63	0.64
2	1509	50-year	3.77	254.93	255.2	255.11	255.22	0.009247	0.89	6.16	39.29	0.66
2	1509	100-year	4.29	254.93	255.21	255.12	255.23	0.009306	0.94	6.69	40	0.67
2	1509	Regional	12	254.93	255.34	255.26	255.39	0.012166	1.49	12.11	44.81	0.83
2	1459	2-year	0.25	254.55	254.72		254.73	0.005053	0.53	0.58	10.92	0.46
2	1459	5-year	0.45	254.55	254.75	254.71	254.77	0.006404	0.68	1.02	19.57	0.54
2	1459	10-year	2.61	254.55	254.88		254.9	0.006064	0.98	5.44	47.66	0.58
2	1459	25-year	3.27	254.55	254.9		254.92	0.00604	1.03	6.52	50.43	0.58
2	1459	50-year	3.77	254.55	254.92		254.94	0.005991	1.06	7.32	53.06	0.59
2	1459	100-year	4.29	254.55	254.93		254.96	0.006111	1.1	8.07	54.42	0.6
2	1459	Regional	12	254.55	255.11		255.14	0.004507	1.24	18.2	59.27	0.55
2	1408.82	2-year	0.25	254.26	254.38		254.39	0.0097	0.53	0.55	7.59	0.59
2	1408.82	5-year	0.45	254.26	254.43		254.44	0.006548	0.54	1.07	13.53	0.51
2	1408.82	10-year	2.61	254.26	254.58		254.6	0.005883	0.87	5.32	38.74	0.55
2	1408.82	25-year	3.27	254.26	254.61		254.63	0.005773	0.92	6.28	39.82	0.56
2	1408.82	50-year	3.77	254.26	254.62		254.65	0.005655	0.95	6.98	40.59	0.56
2	1408.82	100-year	4.29	254.26	254.64		254.67	0.00551	0.97	7.68	41.02	0.56
2	1408.82	Regional	12	254.26	254.77		254.83	0.008182	1.5	13.25	43.24	0.72
2	1358.5	2-year	0.25	253.8	254.02		254.03	0.006141	0.55	0.45	3.65	0.5
2	1358.5	5-year	0.45	253.8	254.06		254.08	0.008146	0.72	0.62	4.43	0.6
2	1358.5	10-year	2.61	253.8	254.21	254.21	254.26	0.009996	1.25	3.92	35.54	0.74
2	1358.5	25-year	3.27	253.8	254.23	254.23	254.28	0.009887	1.3	4.71	35.88	0.74
2	1358.5	50-year	3.77	253.8	254.24	254.24	254.3	0.011462	1.42	4.96	36.01	0.8
2	1358.5	100-year	4.29	253.8	254.25	254.25	254.31	0.011603	1.47	5.45	36.36	0.81
2	1358.5	Regional	12	253.8	254.46		254.51	0.006451	1.51	14.37	45.74	0.66
2	1308.19	2-year	0.25	253.56	253.76		253.77	0.004659	0.47	0.54	4.73	0.43
2	1308.19	5-year	0.45	253.56	253.82		253.83	0.003334	0.47	1.11	12.75	0.38
2	1308.19	10-year	2.61	253.56	254.03		254.04	0.001317	0.53	8.76	44.27	0.28
2	1308.19	25-year	3.27	253.56	254.07		254.08	0.001255	0.55	10.41	45.24	0.28
2	1308.19	50-year	3.77	253.56	254.09		254.1	0.001275	0.57	11.42	45.81	0.28
2	1308.19	100-year	4.29	253.56	254.12		254.12	0.001276	0.59	12.47	46.42	0.28

Reach	River Sta	Profile	Q Total	Min Ch El	W.S. Elev	Crit W.S.	E.G. Elev	E.G. Slope	Vel Chnl	Flow Area	Top Width	Froude # Chl
			(m3/s)	(m)	(m)	(m)	(m)	(m/m)	(m/s)	(m2)	(m)	
2	1308.19	Regional	12	253.56	254.34		254.35	0.001553	0.85	22.99	49.47	0.33
2	1257.87	2-year	0.47	253.18	253.47		253.49	0.0061	0.66	0.71	4.32	0.52
2	1257.87	5-year	0.83	253.18	253.54		253.57	0.006533	0.78	1.07	5.37	0.56
2	1257.87	10-year	4.42	253.18	253.74	253.74	253.82	0.009267	1.39	5.44	44.29	0.73
2	1257.87	25-year	5.61	253.18	253.77	253.76	253.85	0.0099	1.51	6.77	53.9	0.77
2	1257.87	50-year	6.48	253.18	253.8	253.8	253.87	0.00903	1.51	8.38	59.33	0.74
2	1257.87	100-year	7.37	253.18	253.82	253.82	253.89	0.008798	1.53	9.53	68.07	0.74
2	1257.87	Regional	20.72	253.18	253.96	253.96	254.05	0.010806	2.05	21.97	97.66	0.86
2	1207.56	2-year	0.47	252.71	252.94	252.94	252.99	0.018679	1.02	0.46	3.42	0.89
2	1207.56	5-year	0.83	252.71	253.01	252.98	253.07	0.01635	1.15	0.72	4.04	0.87
2	1207.56	10-year	4.42	252.71	253.34	253.34	253.39	0.005489	1.26	7.2	57.66	0.59
2	1207.56	25-year	5.61	252.71	253.35	253.35	253.42	0.007535	1.49	7.78	59.02	0.69
2	1207.56	50-year	6.48	252.71	253.36	253.36	253.44	0.00824	1.59	8.54	65.41	0.73
2	1207.56	100-year	7.37	252.71	253.39	253.39	253.46	0.007648	1.59	10.35	70.35	0.71
2	1207.56	Regional	20.72	252.71	253.58		253.64	0.006174	1.76	24.81	81.17	0.67
2	1157.24	2-year	0.47	252.16	252.45		252.48	0.005961	0.76	0.64	3.38	0.53
2	1157.24	5-year	0.83	252.16	252.52		252.56	0.00688	0.98	0.91	4.82	0.6
2	1157.24	10-year	4.42	252.16	252.79	252.78	252.9	0.009171	1.79	4.32	22.02	0.77
2	1157.24	25-year	5.61	252.16	252.84	252.84	252.96	0.008997	1.89	5.82	31.33	0.78
2	1157.24	50-year	6.48	252.16	252.9	252.9	252.99	0.006909	1.76	7.65	34.7	0.69
2	1157.24	100-year	7.37	252.16	252.93	252.93	253.02	0.006564	1.76	8.73	35.99	0.68
2	1157.24	Regional	20.72	252.16	253.14		253.27	0.009357	2.51	16.86	42.01	0.85
2	1107	2-year	0.47	252	252.27		252.28	0.002424	0.39	1.24	9.73	0.32
2	1107	5-year	0.83	252	252.32		252.33	0.002896	0.5	1.86	18.05	0.37
2	1107	10-year	4.42	252	252.5		252.54	0.004758	1.01	6.17	29.99	0.53
2	1107	25-year	5.61	252	252.55		252.59	0.004664	1.07	7.58	34.29	0.53
2	1107	50-year	6.48	252	252.57		252.62	0.004632	1.12	8.55	35.99	0.54
2	1107	100-year	7.37	252	252.6		252.65	0.004538	1.15	9.59	39.68	0.54
2	1107	Regional	20.72	252	252.87		252.94	0.00392	1.46	22.99	50.81	0.54
2	1057	2-year	0.47	251.83	252.05		252.06	0.008133	0.62	0.87	9.66	0.57
2	1057	5-year	0.83	251.83	252.1		252.12	0.006345	0.65	1.76	21.76	0.53
2	1057	10-year	4.42	251.83	252.31		252.34	0.003673	0.88	7.72	31.52	0.46
2	1057	25-year	5.61	251.83	252.34		252.37	0.004249	1	8.64	31.98	0.51
2	1057	50-year	6.48	251.83	252.36		252.4	0.004456	1.06	9.38	32.8	0.52
2	1057	100-year	7.37	251.83	252.38		252.42	0.004855	1.14	9.99	34.82	0.55
2	1057	Regional	20.72	251.83	252.61		252.7	0.006477	1.74	18.98	44.02	0.68
2	1007	2-year	0.47	251.49	251.8		251.81	0.003695	0.54	0.86	5.18	0.41
2	1007	5-year	0.83	251.49	251.86		251.88	0.004157	0.71	1.21	6.26	0.46
2	1007	10-year	4.42	251.49	252.05	252.04	252.1	0.005967	1.25	6.98	47.47	0.61
2	1007	25-year	5.61	251.49	252.09		252.13	0.005829	1.3	8.58	48.74	0.61
2	1007	50-year	6.48	251.49	252.11		252.16	0.005585	1.32	9.82	51.65	0.6
2	1007	100-year	7.37	251.49	252.14		252.18	0.005255	1.32	11.22	56.06	0.59
2	1007	Regional	20.72	251.49	252.4		252.44	0.003488	1.42	28.72	71.53	0.51
2	955.98	2-year	0.47	251.35	251.62		251.63	0.003636	0.54	0.98	13.09	0.41
2	955.98	5-year	0.83	251.35	251.67	251.58	251.69	0.003382	0.61	2.09	30.2	0.41
2	955.98	10-year	4.42	251.35	251.85		251.87	0.003324	0.9	8.65	38.46	0.45
2	955.98	25-year	5.61	251.35	251.89		251.92	0.003214	0.95	10.36	39.76	0.45
2	955.98	50-year	6.48	251.35	251.92		251.94	0.003255	0.99	11.36	40.03	0.46
2	955.98	100-year	7.37	251.35	251.94		251.97	0.003365	1.04	12.31	40.97	0.47
2	955.98	Regional	20.72	251.35	252.22		252.26	0.003597	1.44	24.35	47.27	0.52
2	906	2-year	0.47	251.1	251.37	251.29	251.4	0.006287	0.64	0.78	9	0.52
2	906	5-year	0.83	251.1	251.42	251.39	251.45	0.006438	0.72	1.56	20.42	0.54

Reach	River Sta	Profile	Q Total	Min Ch El	W.S. Elev	Crit W.S.	E.G. Elev	E.G. Slope	Vel Chnl	Flow Area	Top Width	Froude # Chl
			(m3/s)	(m)	(m)	(m)	(m)	(m/m)	(m/s)	(m2)	(m)	
2	906	10-year	4.42	251.1	251.61	251.55	251.64	0.003964	0.92	8.57	43.43	0.48
2	906	25-year	5.61	251.1	251.65	251.56	251.67	0.004073	0.98	10	44.06	0.5
2	906	50-year	6.48	251.1	251.67	251.59	251.7	0.004049	1.02	11.04	44.39	0.5
2	906	100-year	7.37	251.1	251.69	251.6	251.72	0.004123	1.06	11.97	44.7	0.51
2	906	Regional	20.72	251.1	252.01	251.76	252.04	0.002808	1.25	27.17	51.31	0.46
2	855.35	2-year	0.47	250.77	250.98		251.02	0.008788	0.79	0.63	6.01	0.62
2	855.35	5-year	0.83	250.77	251.05	251.01	251.08	0.008324	0.9	1.13	9.74	0.63
2	855.35	10-year	4.42	250.77	251.23	251.23	251.32	0.01426	1.56	4.61	27.88	0.89
2	855.35	25-year	5.61	250.77	251.27	251.27	251.35	0.013414	1.63	5.65	29.19	0.87
2	855.35	50-year	6.48	250.77	251.28	251.28	251.38	0.015058	1.77	6.01	29.4	0.93
2	855.35	100-year	7.37	250.77	251.31	251.3	251.4	0.01331	1.75	6.88	30.21	0.89
2	855.35	Regional	20.72	250.77	251.92		251.95	0.001519	1.1	29.51	41.25	0.35
2	805.04	2-year	0.47	250.31	250.65		250.68	0.005274	0.71	0.66	3.2	0.5
2	805.04	5-year	0.83	250.31	250.76		250.79	0.004346	0.73	1.37	12.24	0.47
2	805.04	10-year	4.42	250.31	251.1		251.11	0.001211	0.68	11.75	39.13	0.28
2	805.04	25-year	5.61	250.31	251.15		251.17	0.001225	0.72	13.82	40.06	0.29
2	805.04	50-year	6.48	250.31	251.19		251.2	0.001233	0.75	15.26	40.87	0.29
2	805.04	100-year	7.37	250.31	251.23		251.24	0.001188	0.77	16.87	41.31	0.29
2	805.04	Regional	20.72	250.31	251.9		251.91	0.000438	0.73	48.49	52.91	0.2
1	751	2-year	0.9	249.78	250.35		250.35	0.006398	0.14	4.63	12.51	0.06
1	751	5-year	1.58	249.78	250.46		250.47	0.006711	0.16	6.16	14.08	0.07
1	751	10-year	8.54	249.78	250.89		250.92	0.008811	0.27	16.42	45.77	0.09
1	751	25-year	10.73	249.78	250.94		250.98	0.0082	0.27	19.16	47.22	0.08
1	751	50-year	12.52	249.78	250.99		251.02	0.00788	0.27	21.17	48.14	0.08
1	751	100-year	14.36	249.78	251.03		251.06	0.007721	0.28	23.33	50.22	0.08
1	751	Regional	37.6	249.78	251.85		251.87	0.001101	0.15	70.09	62.91	0.03
1	704.41	2-year	0.9	249.62	249.95		250	0.009401	0.97	0.93	4.37	0.67
1	704.41	5-year	1.58	249.62	250.06		250.12	0.008372	1.07	1.48	5.49	0.66
1	704.41	10-year	8.54	249.62	250.56		250.64	0.004379	1.38	8.39	30.81	0.55
1	704.41	25-year	10.73	249.62	250.65		250.73	0.003833	1.4	11.31	36.47	0.53
1	704.41	50-year	12.52	249.62	250.71		250.79	0.003463	1.41	13.73	39.81	0.51
1	704.41	100-year	14.36	249.62	250.77		250.84	0.003191	1.42	16.22	44.23	0.49
1	704.41	Regional	37.6	249.62	251.82		251.84	0.000421	0.88	70.45	58.21	0.21
1	654	2-year	0.9	249.32	249.71		249.74	0.003083	0.72	1.27	4.4	0.41
1	654	5-year	1.58	249.32	249.83		249.87	0.003137	0.9	1.84	5.22	0.44
1	654	10-year	8.54	249.32	250.26		250.4	0.0053	1.86	6.89	16.68	0.64
1	654	25-year	10.73	249.32	250.34		250.49	0.005404	1.99	8.34	18.89	0.65
1	654	50-year	12.52	249.32	250.4		250.56	0.005622	2.11	9.4	20.31	0.67
1	654	100-year	14.36	249.32	250.49	250.36	250.64	0.004905	2.08	11.49	27.26	0.64
1	654	Regional	37.6	249.32	251.8		251.82	0.0003	0.88	88.72	76.6	0.18
1	603.78	2-year	0.9	248.9	249.29	249.29	249.4	0.021615	1.46	0.62	2.89	1.01
1	603.78	5-year	1.58	248.9	249.4	249.4	249.53	0.02335	1.57	1.01	4.46	1.06
1	603.78	10-year	8.54	248.9	249.82	249.82	250.03	0.012397	2.08	4.78	13.58	0.9
1	603.78	25-year	10.73	248.9	249.89	249.89	250.12	0.01234	2.24	5.74	14.31	0.91
1	603.78	50-year	12.52	248.9	249.95	249.95	250.2	0.011585	2.32	6.64	15.44	0.9
1	603.78	100-year	14.36	248.9	249.97	249.97	250.27	0.014121	2.59	6.85	15.92	0.99
1	603.78	Regional	37.6	248.9	251.8		251.81	0.000164	0.66	100.59	67.9	0.13
1	554	2-year	0.9	248.63	248.98		248.99	0.002837	0.59	1.55	6.98	0.38
1	554	5-year	1.58	248.63	249.08		249.11	0.002529	0.71	2.41	9.85	0.38
1	554	10-year	8.54	248.63	249.56		249.61	0.001817	1.07	12.93	42.45	0.37
1	554	25-year	10.73	248.63	249.61		249.66	0.002264	1.24	14.94	48.39	0.42
1	554	50-year	12.52	248.63	249.65		249.71	0.002401	1.31	16.93	49.75	0.44
1	554	100-year	14.36	248.63	249.69		249.75	0.002493	1.38	18.92	51.35	0.45

Reach	River Sta	Profile	Q Total	Min Ch El	W.S. Elev	Crit W.S.	E.G. Elev	E.G. Slope	Vel Chnl	Flow Area	Top Width	Froude # Chl
			(m3/s)	(m)	(m)	(m)	(m)	(m/m)	(m/s)	(m2)	(m)	
1	554	Regional	37.6	248.63	251.8		251.8	0.000042	0.39	163.34	76.02	0.07
1	503.15	2-year	0.9	248.39	248.77		248.8	0.005365	0.82	1.1	4.35	0.52
1	503.15	5-year	1.58	248.39	248.87		248.92	0.006242	1.01	1.56	5.09	0.58
1	503.15	10-year	8.54	248.39	249.27	249.25	249.41	0.008409	1.78	6.79	40.06	0.75
1	503.15	25-year	10.73	248.39	249.36	249.36	249.47	0.006273	1.69	10.71	46.77	0.66
1	503.15	50-year	12.52	248.39	249.39	249.39	249.5	0.006577	1.78	12.09	47.25	0.68
1	503.15	100-year	14.36	248.39	249.41	249.41	249.54	0.006951	1.88	13.32	47.74	0.71
1	503.15	Regional	37.6	248.39	251.8		251.8	0.000042	0.39	156.75	69.83	0.07
1	453	2-year	0.9	248.1	248.37		248.41	0.012084	0.98	0.92	5.19	0.75
1	453	5-year	1.58	248.1	248.44		248.51	0.010787	1.17	1.39	6.76	0.75
1	453	10-year	8.54	248.1	248.88	248.88	249.03	0.007125	1.87	7.09	27.92	0.72
1	453	25-year	10.73	248.1	248.94	248.94	249.1	0.007318	2	8.8	30.83	0.74
1	453	50-year	12.52	248.1	249	248.99	249.15	0.00691	2.03	10.54	35.45	0.73
1	453	100-year	14.36	248.1	249.08	249.04	249.2	0.00521	1.89	13.87	45.95	0.64
1	453	Regional	37.6	248.1	251.8		251.8	0.000026	0.34	193.24	80.49	0.06
1	403	2-year	0.9	247.7	248.04		248.07	0.004384	0.71	1.28	5.82	0.47
1	403	5-year	1.58	247.7	248.13		248.17	0.004433	0.89	1.86	7.85	0.5
1	403	10-year	8.54	247.7	248.63		248.72	0.003428	1.46	8.12	16.79	0.51
1	403	25-year	10.73	247.7	248.68		248.8	0.004425	1.72	8.97	19.04	0.59
1	403	50-year	12.52	247.7	248.72		248.86	0.004957	1.88	9.85	20.99	0.63
1	403	100-year	14.36	247.7	248.76	248.61	248.93	0.005689	2.07	10.69	24.46	0.68
1	403	Regional	37.6	247.7	251.79		251.8	0.000024	0.35	205.32	90.14	0.06
1	353	2-year	0.9	247.4	247.71		247.76	0.009303	0.99	0.91	4.29	0.67
1	353	5-year	1.58	247.4	247.81		247.88	0.0077	1.17	1.4	5.19	0.65
1	353	10-year	8.54	247.4	248.28	248.28	248.46	0.007488	2.08	6.23	24.29	0.75
1	353	25-year	10.73	247.4	248.37	248.37	248.53	0.006256	2.06	8.77	27.99	0.7
1	353	50-year	12.52	247.4	248.42	248.42	248.58	0.006424	2.15	10.15	33.27	0.71
1	353	100-year	14.36	247.4	248.48	248.48	248.64	0.006054	2.18	12.44	37.88	0.7
1	353	Regional	37.6	247.4	251.79		251.8	0.000016	0.3	221.55	76.07	0.05
1	301.89	2-year	0.9	247.01	247.32		247.35	0.007036	0.87	1.04	4.71	0.59
1	301.89	5-year	1.58	247.01	247.41		247.46	0.008416	1.02	1.57	8.25	0.66
1	301.89	10-year	8.54	247.01	247.68	247.68	247.85	0.012841	2.01	5.6	16.89	0.91
1	301.89	25-year	10.73	247.01	247.74	247.74	247.93	0.012676	2.15	6.64	18.67	0.92
1	301.89	50-year	12.52	247.01	247.92		248.02	0.005388	1.69	10.7	26.84	0.63
1	301.89	100-year	14.36	247.01	248.12		248.18	0.002665	1.39	17.13	40.57	0.46
1	301.89	Regional	37.6	247.01	251.79		251.8	0.00001	0.25	242.23	73.42	0.04
1	251.57	2-year	0.9	246.49	246.78	246.78	246.84	0.015184	1.1	1.09	11.82	0.83
1	251.57	5-year	1.58	246.49	246.85	246.85	246.9	0.013408	1.15	2.12	19.54	0.8
1	251.57	10-year	8.54	246.49	247.51		247.52	0.000535	0.57	21.91	33.22	0.2
1	251.57	25-year	10.73	246.49	247.76		247.76	0.00031	0.52	30.22	34.62	0.16
1	251.57	50-year	12.52	246.49	247.95		247.95	0.000226	0.49	36.85	35.36	0.14
1	251.57	100-year	14.36	246.49	248.13		248.14	0.000178	0.48	43.43	36.17	0.13
1	251.57	Regional	37.6	246.49	251.79		251.79	0.000009	0.25	261.11	81.14	0.04
1	199	2-year	0.97	245.93	246.31		246.33	0.00211	0.54	1.81	7.17	0.33
1	199	5-year	1.71	245.93	246.47		246.49	0.001326	0.59	3.02	7.96	0.29
1	199	10-year	9.08	245.93	247.48		247.5	0.00037	0.7	19.15	24.88	0.19
1	199	25-year	11.43	245.93	247.73		247.75	0.000287	0.68	25.83	28.63	0.17
1	199	50-year	13.37	245.93	247.93		247.94	0.000241	0.67	31.58	31.32	0.16
1	199	100-year	15.33	245.93	248.11		248.13	0.000206	0.66	37.76	34.44	0.15
1	199	Regional	40.43	245.93	251.79		251.79	0.000012	0.32	236.4	73.11	0.04
1	191	2-year	0.97	245.61	246.31	245.94	246.32	0.00057	0.47	2.67	9.7	0.2
1	191	5-year	1.71	245.61	246.47	246.07	246.48	0.000663	0.6	3.9	11.27	0.22

Reach	River Sta	Profile	Q Total	Min Ch El	W.S. Elev	Crit W.S.	E.G. Elev	E.G. Slope	Vel Chnl	Flow Area	Top Width	Froude # Chl
			(m3/s)	(m)	(m)	(m)	(m)	(m/m)	(m/s)	(m2)	(m)	
1	191	10-year	9.08	245.61	247.47	246.59	247.5	0.000558	0.96	12.72	23.54	0.23
1	191	25-year	11.43	245.61	247.71	246.68	247.75	0.000535	1.03	14.88	31.1	0.23
1	191	50-year	13.37	245.61	247.9	246.74	247.94	0.00052	1.08	16.53	35.7	0.23
1	191	100-year	15.33	245.61	248.08	246.8	248.12	0.000507	1.12	18.14	39.26	0.23
1	191	Regional	40.43	245.61	251.79	247.44	251.79	0.000009	0.28	297.71	90.45	0.04
1	170		Culvert									
1	146	2-year	0.97	245.62	245.84	245.84	245.89	0.024454	1.07	0.91	8.46	1
1	146	5-year	1.71	245.62	245.89	245.89	245.97	0.023947	1.28	1.34	9.65	1.03
1	146	10-year	9.08	245.62	246.21	246.21	246.45	0.015641	2.18	4.16	13.07	1.01
1	146	25-year	11.43	245.62	246.3	246.3	246.57	0.01435	2.33	4.9	14.04	0.99
1	146	50-year	13.37	245.62	246.35	246.35	246.67	0.014358	2.48	5.39	14.59	1.01
1	146	100-year	15.33	245.62	246.41	246.41	246.76	0.013686	2.58	5.93	15.22	1
1	146	Regional	40.43	245.62	247.04	247.04	247.68	0.010965	3.56	11.34	27.65	1
1	119	2-year	0.97	244.95	245.35		245.36	0.001584	0.51	1.91	6.64	0.3
1	119	5-year	1.71	244.95	245.46		245.48	0.001785	0.66	2.65	7.17	0.33
1	119	10-year	9.08	244.95	245.97		246.06	0.002741	1.41	8.32	18.42	0.47
1	119	25-year	11.43	244.95	246.09		246.19	0.00268	1.51	10.77	26.15	0.47
1	119	50-year	13.37	244.95	246.15		246.26	0.002854	1.62	12.78	34.49	0.49
1	119	100-year	15.33	244.95	246.24		246.34	0.002522	1.6	15.91	38.26	0.47
1	119	Regional	40.43	244.95	246.74		246.85	0.00226	1.92	38.67	48.03	0.47
1	93	2-year	0.97	244.93	245.21	245.18	245.28	0.011651	1.12	0.92	5.92	0.75
1	93	5-year	1.71	244.93	245.3	245.28	245.38	0.010934	1.34	1.52	7.7	0.77
1	93	10-year	9.08	244.93	245.67	245.67	245.93	0.013448	2.51	4.78	9.8	0.97
1	93	25-year	11.43	244.93	245.76	245.76	246.05	0.013297	2.71	5.69	11.07	0.98
1	93	50-year	13.37	244.93	245.87	245.87	246.14	0.010848	2.67	7.13	16.35	0.91
1	93	100-year	15.33	244.93	245.9	245.9	246.21	0.012168	2.9	7.7	17.1	0.97
1	93	Regional	40.43	244.93	246.51	246.51	246.76	0.007042	3.1	26.86	44.47	0.8
1	50.31	2-year	0.97	244.35	244.63	244.62	244.69	0.016101	1.14	0.86	4.8	0.85
1	50.31	5-year	1.71	244.35	244.7	244.69	244.8	0.016636	1.37	1.33	8.15	0.9
1	50.31	10-year	9.08	244.35	245.02	245	245.14	0.011925	1.8	6.87	21.58	0.86
1	50.31	25-year	11.43	244.35	245.08		245.22	0.011172	1.9	8.22	22.13	0.85
1	50.31	50-year	13.37	244.35	245.13		245.27	0.010883	1.98	9.23	22.6	0.85
1	50.31	100-year	15.33	244.35	245.16	245.12	245.32	0.01158	2.12	9.92	23.2	0.88
1	50.31	Regional	40.43	244.35	245.48	245.48	245.81	0.014095	3.14	19.25	33.98	1.05
1	0	2-year	0.97	243.72	243.92	243.89	243.97	0.012994	0.92	1.05	6.85	0.75
1	0	5-year	1.71	243.72	243.99	243.95	244.05	0.012989	1.13	1.51	7.21	0.79
1	0	10-year	9.08	243.72	244.34	244.31	244.51	0.012994	1.82	5	13.51	0.89
1	0	25-year	11.43	243.72	244.41	244.39	244.61	0.012997	1.98	5.98	16.75	0.91
1	0	50-year	13.37	243.72	244.45	244.45	244.67	0.012925	2.09	6.82	19.67	0.92
1	0	100-year	15.33	243.72	244.51	244.51	244.73	0.011817	2.14	7.94	21.38	0.89
1	0	Regional	40.43	243.72	244.94	244.94	245.25	0.009129	2.71	20.5	37.82	0.86

APPENDIX 6-4-2

HECRAS Summary Output Tables

Proposed Model Output

Reach	River Sta	Profile	Q Total	Min Ch El	W.S. Elev	Crit W.S.	E.G. Elev	E.G. Slope	Vel Chnl	Flow Area	Top Width	Froude # Chl
			(m3/s)	(m)	(m)	(m)	(m)	(m/m)	(m/s)	(m2)	(m)	
North MVSP	5139	2-year	0.05	275.88	275.93	275.93	275.95	0.102311	0.63	0.08	2.78	1.14
North MVSP	5139	5-year	0.08	275.88	275.95	275.95	275.97	0.062922	0.62	0.13	3.34	0.95
North MVSP	5139	10-year	0.78	275.88	276.09	276.06	276.12	0.024722	0.83	0.97	7.56	0.72
North MVSP	5139	25-year	0.97	275.88	276.11	276.08	276.15	0.025177	0.9	1.11	7.72	0.74
North MVSP	5139	50-year	1.11	275.88	276.12	276.09	276.16	0.023799	0.93	1.24	7.87	0.73
North MVSP	5139	100-year	1.26	275.88	276.14	276.1	276.18	0.023498	0.96	1.35	8	0.73
North MVSP	5139	Regional	3.06	275.88	276.28	276.24	276.35	0.019755	1.24	2.89	13.55	0.73
North MVSP	5080	2-year	0.05	274.88	275.01	274.95	275.02	0.005469	0.29	0.16	1.79	0.31
North MVSP	5080	5-year	0.08	274.88	275.04	274.97	275.05	0.006652	0.36	0.22	2.08	0.35
North MVSP	5080	10-year	0.78	274.88	275.25	275.18	275.28	0.009978	0.71	1.28	12.23	0.49
North MVSP	5080	25-year	0.97	274.88	275.27	275.21	275.3	0.010004	0.75	1.56	13.74	0.5
North MVSP	5080	50-year	1.11	274.88	275.29	275.23	275.31	0.010613	0.8	1.74	15.95	0.52
North MVSP	5080	100-year	1.26	274.88	275.3	275.25	275.33	0.010608	0.83	1.97	17.49	0.52
North MVSP	5080	Regional	3.06	274.88	275.39	275.35	275.44	0.013983	1.16	3.57	19.88	0.63
North MVSP	5045	2-year	0.05	274.55	274.6		274.61	0.035623	0.36	0.13	5.2	0.67
North MVSP	5045	5-year	0.08	274.55	274.62		274.62	0.028264	0.39	0.22	6.99	0.62
North MVSP	5045	10-year	0.78	274.55	274.71		274.73	0.027603	0.67	1.24	18.4	0.71
North MVSP	5045	25-year	0.97	274.55	274.72		274.74	0.027271	0.71	1.49	21.1	0.72
North MVSP	5045	50-year	1.11	274.55	274.73		274.75	0.025043	0.71	1.72	22.19	0.7
North MVSP	5045	100-year	1.26	274.55	274.74		274.76	0.025655	0.73	1.89	23.73	0.71
North MVSP	5045	Regional	3.06	274.55	274.82		274.85	0.017451	0.84	4.25	32.47	0.63
North MVSP	5008	2-year	0.05	274.26	274.32	274.28	274.32	0.00356	0.11	0.36	10.81	0.21
North MVSP	5008	5-year	0.08	274.26	274.33		274.33	0.00393	0.13	0.51	12.29	0.23
North MVSP	5008	10-year	0.78	274.26	274.44		274.44	0.003505	0.21	3.22	39.7	0.24
North MVSP	5008	25-year	0.97	274.26	274.46		274.46	0.00349	0.21	3.82	42.2	0.25
North MVSP	5008	50-year	1.11	274.26	274.47		274.47	0.003606	0.23	4.21	43.12	0.25
North MVSP	5008	100-year	1.26	274.26	274.47		274.48	0.003592	0.25	4.59	43.89	0.26
North MVSP	5008	Regional	3.06	274.26	274.55		274.56	0.00386	0.36	8.24	51.2	0.29
North MVSP	4946.01	2-year	0.05	273.73	273.81		273.81	0.015902	0.27	0.17	4.68	0.46
North MVSP	4946.01	5-year	0.08	273.73	273.82		273.83	0.012548	0.3	0.26	5.42	0.43
North MVSP	4946.01	10-year	0.78	273.73	273.91	273.89	273.93	0.018476	0.64	1.53	24.64	0.6
North MVSP	4946.01	25-year	0.97	273.73	273.92	273.91	273.94	0.020149	0.7	1.77	26.82	0.64
North MVSP	4946.01	50-year	1.11	273.73	273.93	273.92	273.95	0.019965	0.73	1.99	28.64	0.64
North MVSP	4946.01	100-year	1.26	273.73	273.94	273.93	273.96	0.018594	0.73	2.25	29.28	0.63
North MVSP	4946.01	Regional	3.06	273.73	274	273.98	274.03	0.021041	0.98	4.05	33.43	0.71
North MVSP	4885.21	2-year	0.05	273.02	273.17		273.18	0.007371	0.2	0.22	5.47	0.32
North MVSP	4885.21	5-year	0.08	273.02	273.19		273.19	0.008942	0.25	0.31	6.54	0.36
North MVSP	4885.21	10-year	0.78	273.02	273.31		273.32	0.006486	0.45	2.13	27.67	0.37
North MVSP	4885.21	25-year	0.97	273.02	273.32		273.33	0.005995	0.46	2.63	30.6	0.36
North MVSP	4885.21	50-year	1.11	273.02	273.33		273.34	0.00619	0.49	2.95	34.12	0.37
North MVSP	4885.21	100-year	1.26	273.02	273.34		273.35	0.006278	0.51	3.25	38.07	0.38
North MVSP	4885.21	Regional	3.06	273.02	273.42		273.43	0.006415	0.64	6.63	53.02	0.41
North MVSP	4831.92	2-year	0.05	272.78	272.77		272.77	0.00693		0.19	3.55	0
North MVSP	4831.92	5-year	0.08	272.78	272.8		272.8	0.005345	0.07	0.32	5.2	0.22
North MVSP	4831.92	10-year	0.78	272.78	272.94		272.95	0.006626	0.3	2.21	25.18	0.34
North MVSP	4831.92	25-year	0.97	272.78	272.96		272.96	0.00692	0.34	2.67	28.74	0.36
North MVSP	4831.92	50-year	1.11	272.78	272.97		272.97	0.007261	0.36	2.91	30.23	0.37
North MVSP	4831.92	100-year	1.26	272.78	272.98		272.99	0.006518	0.36	3.38	34.76	0.35
North MVSP	4831.92	Regional	3.06	272.78	273.06	272.98	273.07	0.006611	0.51	7.35	63.41	0.39
North MVSP	4800.81	2-year	0.05	272.63	272.62	272.58	272.63	0.006312		0.19	5.3	0
North MVSP	4800.81	5-year	0.08	272.63	272.64	272.6	272.64	0.006818	0.05	0.35	14.46	0.21
North MVSP	4800.81	10-year	0.78	272.63	272.71	272.67	272.72	0.008493	0.27	2.73	48.3	0.36
North MVSP	4800.81	25-year	0.97	272.63	272.72	272.68	272.73	0.008422	0.29	3.19	50.48	0.37
North MVSP	4800.81	50-year	1.11	272.63	272.73	272.69	272.73	0.008041	0.31	3.59	53.38	0.37
North MVSP	4800.81	100-year	1.26	272.63	272.73	272.7	272.74	0.009169	0.34	3.74	54.4	0.4
North MVSP	4800.81	Regional	3.06	272.63	272.77		272.79	0.013107	0.54	6.34	66.27	0.51

Reach	River Sta	Profile	Q Total	Min Ch El	W.S. Elev	Crit W.S.	E.G. Elev	E.G. Slope	Vel Chnl	Flow Area	Top Width	Froude # Chl
			(m3/s)	(m)	(m)	(m)	(m)	(m/m)	(m/s)	(m2)	(m)	
North MVSP	4749.98	2-year	0.05	272.21	272.3		272.3	0.002025	0.11	0.44	14.23	0.17
North MVSP	4749.98	5-year	0.08	272.21	272.32		272.32	0.002098	0.13	0.67	17.72	0.18
North MVSP	4749.98	10-year	0.78	272.21	272.4		272.41	0.002146	0.25	4.41	63.12	0.21
North MVSP	4749.98	25-year	0.97	272.21	272.42		272.42	0.002034	0.26	5.27	65.72	0.21
North MVSP	4749.98	50-year	1.11	272.21	272.42		272.43	0.002032	0.27	5.81	67.19	0.21
North MVSP	4749.98	100-year	1.26	272.21	272.43		272.44	0.001901	0.27	6.49	68.8	0.21
North MVSP	4749.98	Regional	3.06	272.21	272.53		272.53	0.001249	0.29	13.94	87.12	0.18
North MVSP	4701.43	2-year	0.05	272.05	272.16		272.16	0.005041	0.16	0.28	7.49	0.26
North MVSP	4701.43	5-year	0.08	272.05	272.18		272.18	0.004391	0.17	0.46	11.16	0.25
North MVSP	4701.43	10-year	0.78	272.05	272.29		272.3	0.003081	0.3	3.04	31.6	0.26
North MVSP	4701.43	25-year	0.97	272.05	272.31		272.31	0.003048	0.32	3.55	32.37	0.26
North MVSP	4701.43	50-year	1.11	272.05	272.32		272.32	0.003038	0.34	3.9	32.69	0.26
North MVSP	4701.43	100-year	1.26	272.05	272.33		272.34	0.002899	0.34	4.31	33.22	0.26
North MVSP	4701.43	Regional	3.06	272.05	272.45		272.45	0.002377	0.43	8.65	42.61	0.25
North MVSP	4651.75	2-year	0.05	271.87	271.98	271.93	271.99	0.002457	0.13	0.34	7.06	0.19
North MVSP	4651.75	5-year	0.08	271.87	272.01		272.01	0.002493	0.14	0.54	9.77	0.2
North MVSP	4651.75	10-year	0.78	271.87	272.13		272.13	0.003773	0.36	2.33	18.57	0.29
North MVSP	4651.75	25-year	0.97	271.87	272.15		272.16	0.003602	0.38	2.75	19.56	0.29
North MVSP	4651.75	50-year	1.11	271.87	272.16		272.17	0.003999	0.42	2.92	19.77	0.31
North MVSP	4651.75	100-year	1.26	271.87	272.17		272.18	0.003948	0.43	3.19	20.55	0.31
North MVSP	4651.75	Regional	3.06	271.87	272.29		272.31	0.003835	0.58	6.07	26.25	0.33
North MVSP	4602.06	2-year	0.05	271.67	271.73	271.71	271.73	0.016865	0.3	0.15	3.95	0.48
North MVSP	4602.06	5-year	0.08	271.67	271.75	271.72	271.75	0.015544	0.34	0.24	5.55	0.48
North MVSP	4602.06	10-year	0.78	271.67	271.89	271.82	271.9	0.006588	0.48	1.82	14.48	0.38
North MVSP	4602.06	25-year	0.97	271.67	271.91	271.83	271.92	0.006393	0.51	2.13	15.04	0.38
North MVSP	4602.06	50-year	1.11	271.67	271.93	271.83	271.94	0.005697	0.51	2.42	15.56	0.37
North MVSP	4602.06	100-year	1.26	271.67	271.95	271.87	271.96	0.005697	0.54	2.63	15.96	0.37
North MVSP	4602.06	Regional	3.06	271.67	272.07	271.94	272.09	0.005475	0.72	4.91	19.79	0.39
North MVSP	4559.74	2-year	0.05	271.26	271.36		271.36	0.005438	0.22	0.2	3.37	0.29
North MVSP	4559.74	5-year	0.08	271.26	271.39		271.39	0.005322	0.22	0.36	6.08	0.29
North MVSP	4559.74	10-year	0.78	271.26	271.5		271.52	0.014336	0.7	1.14	8.5	0.56
North MVSP	4559.74	25-year	0.97	271.26	271.52		271.55	0.014893	0.77	1.31	9.47	0.58
North MVSP	4559.74	50-year	1.11	271.26	271.52		271.56	0.017746	0.86	1.36	9.56	0.64
North MVSP	4559.74	100-year	1.26	271.26	271.53		271.57	0.018958	0.92	1.45	10.39	0.67
North MVSP	4559.74	Regional	3.06	271.26	271.62	271.62	271.7	0.023887	1.32	2.82	18.46	0.8
North MVSP	4492.85	2-year	0.05	270.66	270.72		270.72	0.020286	0.29	0.16	4.97	0.51
North MVSP	4492.85	5-year	0.08	270.66	270.73		270.74	0.02333	0.35	0.22	5.84	0.57
North MVSP	4492.85	10-year	0.78	270.66	270.88		270.9	0.006791	0.53	1.74	16.5	0.4
North MVSP	4492.85	25-year	0.97	270.66	270.9		270.92	0.006848	0.57	2.07	17.59	0.4
North MVSP	4492.85	50-year	1.11	270.66	270.92		270.93	0.006008	0.56	2.41	18.12	0.38
North MVSP	4492.85	100-year	1.26	270.66	270.94		270.95	0.005821	0.58	2.67	18.49	0.38
North MVSP	4492.85	Regional	3.06	270.66	271.07		271.08	0.004827	0.71	5.47	23.92	0.37
North MVSP	4460.53	2-year	0.05	270.52	270.6	270.56	270.6	0.00147	0.11	0.45	10.2	0.15
North MVSP	4460.53	5-year	0.08	270.52	270.62		270.62	0.001532	0.14	0.63	10.89	0.16
North MVSP	4460.53	10-year	0.78	270.52	270.76		270.76	0.002363	0.35	2.67	17.85	0.24
North MVSP	4460.53	25-year	0.97	270.52	270.78		270.78	0.002487	0.38	3.04	18.34	0.25
North MVSP	4460.53	50-year	1.11	270.52	270.79		270.8	0.002572	0.4	3.3	18.68	0.26
North MVSP	4460.53	100-year	1.26	270.52	270.8		270.81	0.002718	0.42	3.53	18.95	0.27
North MVSP	4460.53	Regional	3.06	270.52	270.9		270.92	0.004558	0.68	5.47	21.73	0.36
North MVSP	4397.62	2-year	0.06	270.27	270.32	270.32	270.32	0.023123	0.25	0.28	14.55	0.52
North MVSP	4397.62	5-year	0.11	270.27	270.33	270.32	270.33	0.022394	0.29	0.43	18.51	0.53
North MVSP	4397.62	10-year	1.14	270.27	270.4	270.37	270.41	0.018119	0.53	2.47	36.3	0.57
North MVSP	4397.62	25-year	1.41	270.27	270.41	270.38	270.42	0.018015	0.56	2.84	36.74	0.58
North MVSP	4397.62	50-year	1.62	270.27	270.42	270.39	270.43	0.016018	0.57	3.21	37.18	0.56
North MVSP	4397.62	100-year	1.87	270.27	270.43	270.4	270.44	0.015193	0.59	3.57	37.61	0.55

Reach	River Sta	Profile	Q Total	Min Ch El	W.S. Elev	Crit W.S.	E.G. Elev	E.G. Slope	Vel Chnl	Flow Area	Top Width	Froude # Chl
			(m3/s)	(m)	(m)	(m)	(m)	(m/m)	(m/s)	(m2)	(m)	
North MVSP	4397.62	Regional	4.73	270.27	270.54	270.45	270.56	0.007914	0.66	8	42.52	0.44
WH-37.12-Prop	3459.49	2-year	0.06	263.47	263.67		263.68	0.0023	0.33	0.45	11.38	0.29
WH-37.12-Prop	3459.49	5-year	0.11	263.47	263.7		263.7	0.002692	0.38	0.77	15.5	0.32
WH-37.12-Prop	3459.49	10-year	1.12	263.47	263.93		263.93	0.000795	0.38	7.49	31.66	0.2
WH-37.12-Prop	3459.49	25-year	1.4	263.47	264.06		264.07	0.000292	0.29	11.82	32.35	0.13
WH-37.12-Prop	3459.49	50-year	1.6	263.47	264.19		264.19	0.000148	0.24	15.97	32.99	0.1
WH-37.12-Prop	3459.49	100-year	1.81	263.47	264.34		264.34	0.000081	0.2	20.82	33.73	0.07
WH-37.12-Prop	3459.49	Regional	4.71	263.47	265.87		265.87	0.000009	0.14	78.66	41.57	0.03
WH-37.12-Prop	3410	2-year	0.06	263.44	263.63		263.63	0.001682	0.28	0.73	32.56	0.26
WH-37.12-Prop	3410	5-year	0.11	263.44	263.64		263.64	0.001894	0.32	1.18	32.65	0.28
WH-37.12-Prop	3410	10-year	1.12	263.44	263.92		263.92	0.000309	0.27	10.5	34.31	0.13
WH-37.12-Prop	3410	25-year	1.4	263.44	264.06		264.06	0.00014	0.22	15.42	35.15	0.09
WH-37.12-Prop	3410	50-year	1.6	263.44	264.19		264.19	0.00008	0.19	20	35.92	0.07
WH-37.12-Prop	3410	100-year	1.81	263.44	264.34		264.34	0.000049	0.17	25.33	36.8	0.06
WH-37.12-Prop	3410	Regional	4.71	263.44	265.87		265.87	0.000007	0.13	88.98	45.95	0.03
WH-37.12-Prop	3359.83	2-year	0.06	263.38	263.55		263.56	0.001474	0.26	0.89	40.58	0.24
WH-37.12-Prop	3359.83	5-year	0.11	263.38	263.57		263.57	0.001271	0.26	1.54	40.69	0.23
WH-37.12-Prop	3359.83	10-year	1.12	263.38	263.91		263.91	0.000111	0.18	15.81	43.05	0.08
WH-37.12-Prop	3359.83	25-year	1.4	263.38	264.06		264.06	0.000058	0.15	22.14	44.06	0.06
WH-37.12-Prop	3359.83	50-year	1.6	263.38	264.19		264.19	0.000036	0.14	27.95	44.96	0.05
WH-37.12-Prop	3359.83	100-year	1.81	263.38	264.33		264.33	0.000024	0.13	34.65	45.98	0.04
WH-37.12-Prop	3359.83	Regional	4.71	263.38	265.87		265.87	0.000004	0.1	113.64	56.64	0.02
WH-37.12-Prop	3310.14	2-year	0.06	263.32	263.5	263.44	263.5	0.001485	0.26	0.77	31.82	0.24
WH-37.12-Prop	3310.14	5-year	0.11	263.32	263.52		263.52	0.001491	0.28	1.28	31.92	0.25
WH-37.12-Prop	3310.14	10-year	1.12	263.32	263.91		263.91	0.000116	0.19	14.12	34.29	0.09
WH-37.12-Prop	3310.14	25-year	1.4	263.32	264.05		264.05	0.000067	0.17	19.24	35.2	0.07
WH-37.12-Prop	3310.14	50-year	1.6	263.32	264.19		264.19	0.000044	0.16	23.92	36	0.06
WH-37.12-Prop	3310.14	100-year	1.81	263.32	264.33		264.33	0.00003	0.15	29.31	36.91	0.05
WH-37.12-Prop	3310.14	Regional	4.71	263.32	265.87		265.87	0.000006	0.12	93.4	46.28	0.03
WH-37.12-Prop	3260	2-year	0.06	263.25	263.43		263.43	0.001475	0.26	0.78	30.16	0.24
WH-37.12-Prop	3260	5-year	0.11	263.25	263.45		263.45	0.001147	0.25	1.41	30.3	0.22
WH-37.12-Prop	3260	10-year	1.12	263.25	263.9		263.9	0.000076	0.17	15.84	33.22	0.07
WH-37.12-Prop	3260	25-year	1.4	263.25	264.05		264.05	0.000049	0.16	20.87	34.19	0.06
WH-37.12-Prop	3260	50-year	1.6	263.25	264.18		264.18	0.000035	0.15	25.46	35.05	0.05
WH-37.12-Prop	3260	100-year	1.81	263.25	264.33		264.33	0.000025	0.14	30.73	36.01	0.04
WH-37.12-Prop	3260	Regional	4.71	263.25	265.87		265.87	0.000006	0.12	93.94	46.01	0.02
WH-37.12-Prop	3210.77	2-year	0.06	263.18	263.35		263.36	0.001833	0.28	0.69	30.17	0.27
WH-37.12-Prop	3210.77	5-year	0.11	263.18	263.36		263.36	0.003269	0.4	0.9	30.22	0.36
WH-37.12-Prop	3210.77	10-year	1.12	263.18	263.9		263.9	0.00005	0.15	18.17	33.87	0.06
WH-37.12-Prop	3210.77	25-year	1.4	263.18	264.05		264.05	0.000035	0.14	23.34	34.89	0.05
WH-37.12-Prop	3210.77	50-year	1.6	263.18	264.18		264.18	0.000026	0.14	28.04	35.8	0.04
WH-37.12-Prop	3210.77	100-year	1.81	263.18	264.33		264.33	0.000019	0.13	33.44	36.81	0.04
WH-37.12-Prop	3210.77	Regional	4.71	263.18	265.87		265.87	0.000005	0.12	98.29	47.3	0.02
WH-37.12-Prop	3165.68	2-year	0.06	263.09	263.28		263.28	0.000816	0.2	1.03	30.2	0.18
WH-37.12-Prop	3165.68	5-year	0.11	263.09	263.32		263.32	0.000253	0.14	2.43	30.53	0.11
WH-37.12-Prop	3165.68	10-year	1.12	263.09	263.9		263.9	0.000031	0.13	21.06	34.65	0.05
WH-37.12-Prop	3165.68	25-year	1.4	263.09	264.05		264.05	0.000024	0.13	26.37	35.74	0.04
WH-37.12-Prop	3165.68	50-year	1.6	263.09	264.18		264.18	0.000019	0.12	31.2	36.7	0.04
WH-37.12-Prop	3165.68	100-year	1.81	263.09	264.33		264.33	0.000015	0.12	36.76	37.77	0.03
WH-37.12-Prop	3165.68	Regional	4.71	263.09	265.87		265.87	0.000004	0.11	103.64	48.94	0.02
WH-37.12-Prop	3160	2-year	0.06	263.07	263.25	263.19	263.26	0.005995	0.39	0.16	2.07	0.45
WH-37.12-Prop	3160	5-year	0.11	263.07	263.31	263.22	263.32	0.003062	0.31	0.35	4.05	0.33
WH-37.12-Prop	3160	10-year	1.12	263.07	263.89	263.43	263.9	0.000083	0.19	8.85	30.17	0.08
WH-37.12-Prop	3160	25-year	1.4	263.07	264.05	263.45	264.05	0.000059	0.18	11.26	31.25	0.07
WH-37.12-Prop	3160	50-year	1.6	263.07	264.18	263.45	264.18	0.000044	0.18	13.38	32.24	0.06

Reach	River Sta	Profile	Q Total	Min Ch El	W.S. Elev	Crit W.S.	E.G. Elev	E.G. Slope	Vel Chnl	Flow Area	Top Width	Froude # Chl
			(m3/s)	(m)	(m)	(m)	(m)	(m/m)	(m/s)	(m2)	(m)	
WH-37.12-Prop	3160	100-year	1.81	263.07	264.33	263.46	264.33	0.000033	0.17	15.76	33.5	0.05
WH-37.12-Prop	3160	Regional	4.71	263.07	265.87	263.58	265.87	0.000004	0.11	91	46.05	0.02
WH-37.12-Prop	3138		Culvert									
WH-37.12-Prop	3122	2-year	0.06	263.02	263.18	263.12	263.19	0.004702	0.34	0.18	2.48	0.4
WH-37.12-Prop	3122	5-year	0.11	263.02	263.21	263.16	263.22	0.006903	0.44	0.25	3.07	0.49
WH-37.12-Prop	3122	10-year	1.12	263.02	263.71	263.35	263.72	0.000173	0.24	7.28	36.34	0.11
WH-37.12-Prop	3122	25-year	1.4	263.02	263.9	263.36	263.9	0.000093	0.22	10.12	37.5	0.08
WH-37.12-Prop	3122	50-year	1.6	263.02	264.05	263.37	264.05	0.000063	0.2	12.41	38.43	0.07
WH-37.12-Prop	3122	100-year	1.81	263.02	264.2	263.39	264.2	0.000045	0.19	14.84	39.41	0.06
WH-37.12-Prop	3122	Regional	4.71	263.02	265.22	263.51	265.22	0.000028	0.24	30.62	45.87	0.05
WH-37.12-Prop	3111.39	2-year	0.06	262.98	263.14	263.09	263.15	0.004114	0.41	0.27	12.81	0.4
WH-37.12-Prop	3111.39	5-year	0.11	262.98	263.16		263.17	0.003556	0.44	0.76	28.17	0.38
WH-37.12-Prop	3111.39	10-year	1.12	262.98	263.72		263.72	0.000037	0.13	20.86	38.35	0.05
WH-37.12-Prop	3111.39	25-year	1.4	262.98	263.9		263.9	0.000023	0.12	28.01	39.5	0.04
WH-37.12-Prop	3111.39	50-year	1.6	262.98	264.05		264.05	0.000016	0.11	33.91	40.41	0.04
WH-37.12-Prop	3111.39	100-year	1.81	262.98	264.2		264.2	0.000012	0.11	40.3	41.31	0.03
WH-37.12-Prop	3111.39	Regional	4.71	262.98	265.22		265.22	0.000008	0.14	85.38	47.18	0.03
WH-37.12-Prop	3061.7	2-year	0.06	262.82	263.06		263.06	0.001215	0.27	0.51	26.6	0.22
WH-37.12-Prop	3061.7	5-year	0.11	262.82	263.16		263.16	0.000059	0.08	4.04	35.82	0.05
WH-37.12-Prop	3061.7	10-year	1.12	262.82	263.71		263.71	0.000022	0.11	24.82	39.38	0.04
WH-37.12-Prop	3061.7	25-year	1.4	262.82	263.9		263.9	0.000015	0.1	32.17	40.57	0.03
WH-37.12-Prop	3061.7	50-year	1.6	262.82	264.05		264.05	0.000011	0.1	38.24	41.52	0.03
WH-37.12-Prop	3061.7	100-year	1.81	262.82	264.2		264.2	0.000009	0.1	44.82	42.53	0.03
WH-37.12-Prop	3061.7	Regional	4.71	262.82	265.22		265.22	0.000007	0.12	91.53	49.17	0.03
WH-37.12-Prop	3041	2-year	0.06	262.74	263.05		263.05	0.000457	0.2	0.98	39.53	0.14
WH-37.12-Prop	3041	5-year	0.11	262.74	263.16		263.16	0.000025	0.06	5.71	42.94	0.04
WH-37.12-Prop	3041	10-year	1.12	262.74	263.71		263.71	0.000014	0.09	30.74	47.61	0.03
WH-37.12-Prop	3041	25-year	1.4	262.74	263.9		263.9	0.00001	0.09	39.65	49.17	0.03
WH-37.12-Prop	3041	50-year	1.6	262.74	264.05		264.05	0.000008	0.08	47.01	50.42	0.02
WH-37.12-Prop	3041	100-year	1.81	262.74	264.2		264.2	0.000006	0.08	55.01	51.75	0.02
WH-37.12-Prop	3041	Regional	4.71	262.74	265.22		265.22	0.000005	0.1	112.16	60.42	0.02
WH-37.12-Prop	3022.08	2-year	0.15	262.67	263.02	262.87	263.03	0.001857	0.44	0.62	34.19	0.28
WH-37.12-Prop	3022.08	5-year	0.33	262.67	263.15	263.02	263.16	0.000753	0.37	1.98	39.31	0.19
WH-37.12-Prop	3022.08	10-year	1.52	262.67	263.71	263.16	263.71	0.000255	0.4	7.71	44.53	0.13
WH-37.12-Prop	3022.08	25-year	2.01	262.67	263.89	263.19	263.9	0.000219	0.42	9.61	46.78	0.13
WH-37.12-Prop	3022.08	50-year	2.4	262.67	264.04	263.22	264.04	0.000195	0.43	11.14	48.58	0.12
WH-37.12-Prop	3022.08	100-year	2.79	262.67	264.2	263.24	264.2	0.000169	0.43	12.75	50.2	0.12
WH-37.12-Prop	3022.08	Regional	8.79	262.67	265.21	263.51	265.22	0.000235	0.73	23.19	59.36	0.15
WH-37.12-Prop	2998.53		Culvert									
WH-37.12-Prop	2934.09	2-year	0.15	262.84	262.99	262.94	263	0.004161	0.43	0.35	3.59	0.41
WH-37.12-Prop	2934.09	5-year	0.33	262.84	263.06	262.98	263.07	0.00409	0.59	0.57	4.2	0.44
WH-37.12-Prop	2934.09	10-year	1.52	262.84	263.29	263.17	263.36	0.005248	1.16	1.31	4.98	0.57
WH-37.12-Prop	2934.09	25-year	2.01	262.84	263.36	263.22	263.45	0.005646	1.33	1.51	5.19	0.61
WH-37.12-Prop	2934.09	50-year	2.4	262.84	263.41	263.27	263.52	0.005913	1.44	1.66	5.35	0.63
WH-37.12-Prop	2934.09	100-year	2.79	262.84	263.44	263.31	263.57	0.006441	1.57	1.77	5.46	0.66
WH-37.12-Prop	2934.09	Regional	8.79	262.84	263.81	263.81	264.28	0.01232	3.03	2.9	6.71	1
WH-37.12-Prop	2912.72	2-year	0.15	262.6	262.76	262.75	262.8	0.030479	0.92	0.16	2.06	1.03
WH-37.12-Prop	2912.72	5-year	0.33	262.6	262.82	262.82	262.88	0.026054	1.11	0.3	2.46	1.02
WH-37.12-Prop	2912.72	10-year	1.52	262.6	263.02	263.02	263.16	0.01948	1.6	0.95	3.72	1
WH-37.12-Prop	2912.72	25-year	2.01	262.6	263.08	263.08	263.23	0.017687	1.73	1.17	3.93	0.98
WH-37.12-Prop	2912.72	50-year	2.4	262.6	263.12	263.12	263.29	0.01728	1.84	1.32	4.06	0.99
WH-37.12-Prop	2912.72	100-year	2.79	262.6	263.16	263.16	263.35	0.016246	1.92	1.48	4.19	0.98
WH-37.12-Prop	2912.72	Regional	8.79	262.6	263.59	263.59	263.93	0.011648	2.67	3.62	5.68	0.94

Reach	River Sta	Profile	Q Total	Min Ch El	W.S. Elev	Crit W.S.	E.G. Elev	E.G. Slope	Vel Chnl	Flow Area	Top Width	Froude # Chl
			(m3/s)	(m)	(m)	(m)	(m)	(m/m)	(m/s)	(m2)	(m)	
WH-37.12-Prop	2855.23	2-year	0.15	262.13	262.3		262.31	0.003865	0.35	0.43	4.74	0.38
WH-37.12-Prop	2855.23	5-year	0.33	262.13	262.36	262.3	262.37	0.004103	0.48	0.7	6.04	0.42
WH-37.12-Prop	2855.23	10-year	1.52	262.13	262.49	262.44	262.51	0.005029	0.77	2.48	18.39	0.5
WH-37.12-Prop	2855.23	25-year	2.01	262.13	262.52	262.47	262.54	0.005307	0.84	2.98	18.64	0.53
WH-37.12-Prop	2855.23	50-year	2.4	262.13	262.54	262.49	262.57	0.005367	0.88	3.37	18.82	0.53
WH-37.12-Prop	2855.23	100-year	2.79	262.13	262.55	262.49	262.59	0.005556	0.92	3.69	18.98	0.55
WH-37.12-Prop	2855.23	Regional	8.79	262.13	263.18		263.19	0.000486	0.59	16.49	21.78	0.2
WH-37.12-Prop	2813.79	2-year	0.15	261.77	261.88	261.88	261.9	0.058445	0.59	0.25	6.01	0.92
WH-37.12-Prop	2813.79	5-year	0.33	261.77	261.91	261.91	261.93	0.05927	0.76	0.44	7.27	0.98
WH-37.12-Prop	2813.79	10-year	1.52	261.77	262.01	262.01	262.07	0.036578	1.12	1.51	14.99	0.92
WH-37.12-Prop	2813.79	25-year	2.01	261.77	262.04	262.04	262.1	0.030895	1.15	2.02	17.13	0.87
WH-37.12-Prop	2813.79	50-year	2.4	261.77	262.06	262.06	262.12	0.030272	1.21	2.34	18.26	0.87
WH-37.12-Prop	2813.79	100-year	2.79	261.77	262.07	262.07	262.14	0.030392	1.25	2.62	18.75	0.89
WH-37.12-Prop	2813.79	Regional	8.79	261.77	263.17	262.23	263.18	0.000215	0.35	28.18	26.37	0.1
WH-37.12-Prop	2764.7	2-year	0.15	261.54	261.6		261.6	0.000109	0.03	2.54	33.51	0.05
WH-37.12-Prop	2764.7	5-year	0.33	261.54	261.62		261.62	0.000261	0.06	3.21	33.73	0.09
WH-37.12-Prop	2764.7	10-year	1.52	261.54	261.68		261.69	0.0011	0.22	5.36	34.97	0.21
WH-37.12-Prop	2764.7	25-year	2.01	261.54	261.71		261.71	0.001281	0.27	6.1	35.44	0.23
WH-37.12-Prop	2764.7	50-year	2.4	261.54	261.75		261.75	0.000891	0.27	7.68	36.19	0.2
WH-37.12-Prop	2764.7	100-year	2.79	261.54	261.82		261.82	0.000498	0.25	10.15	36.87	0.16
WH-37.12-Prop	2764.7	Regional	8.79	261.54	263.17		263.17	0.000012	0.14	70.87	49.14	0.03
WH-37.12-Prop	2721.34	2-year	0.85	261.16	261.49	261.49	261.52	0.011373	0.95	1.38	21.45	0.72
WH-37.12-Prop	2721.34	5-year	1.17	261.16	261.51	261.51	261.54	0.011833	0.91	2.03	26.32	0.73
WH-37.12-Prop	2721.34	10-year	2.03	261.16	261.55	261.55	261.58	0.015136	1.07	2.93	29.36	0.83
WH-37.12-Prop	2721.34	25-year	2.53	261.16	261.61		261.63	0.005679	0.72	5.02	32.65	0.52
WH-37.12-Prop	2721.34	50-year	2.95	261.16	261.71		261.71	0.001748	0.49	8.27	36.64	0.3
WH-37.12-Prop	2721.34	100-year	3.35	261.16	261.8		261.8	0.000779	0.39	11.72	42.01	0.21
WH-37.12-Prop	2721.34	Regional	9.55	261.16	263.17		263.17	0.000015	0.16	94.88	79.45	0.04
WH-37.12-Prop	2678.01	2-year	0.85	260.42	261.12	260.75	261.12	0.000257	0.29	2.94	30.01	0.13
WH-37.12-Prop	2678.01	5-year	1.17	260.42	261.23	260.77	261.23	0.000257	0.33	3.55	35.78	0.13
WH-37.12-Prop	2678.01	10-year	2.03	260.42	261.47	260.84	261.47	0.000258	0.41	4.94	43.16	0.14
WH-37.12-Prop	2678.01	25-year	2.53	260.42	261.59	260.89	261.6	0.000258	0.45	5.64	46.59	0.15
WH-37.12-Prop	2678.01	50-year	2.95	260.42	261.68	260.91	261.69	0.000257	0.48	6.18	48.56	0.15
WH-37.12-Prop	2678.01	100-year	3.35	260.42	261.77	260.94	261.78	0.000255	0.5	6.7	49.55	0.15
WH-37.12-Prop	2678.01	Regional	9.55	260.42	263.14	261.26	263.17	0.000152	0.65	14.68	85.4	0.13
WH-37.12-Prop	2664.39		Culvert									
WH-37.12-Prop	2644.21	2-year	0.85	260.5	260.77	260.74	260.8	0.012492	0.76	1.12	9.86	0.71
WH-37.12-Prop	2644.21	5-year	1.17	260.5	260.81	260.77	260.84	0.013438	0.79	1.47	14.11	0.74
WH-37.12-Prop	2644.21	10-year	2.03	260.5	260.85	260.83	260.9	0.014553	1	2.04	17.8	0.81
WH-37.12-Prop	2644.21	25-year	2.53	260.5	260.87	260.85	260.93	0.016545	1.14	2.25	18.53	0.87
WH-37.12-Prop	2644.21	50-year	2.95	260.5	260.88	260.87	260.95	0.017627	1.23	2.42	19.12	0.91
WH-37.12-Prop	2644.21	100-year	3.35	260.5	260.89	260.89	260.98	0.018899	1.32	2.57	19.8	0.95
WH-37.12-Prop	2644.21	Regional	9.55	260.5	261.07	261.07	261.25	0.015938	1.9	5.15	28.91	0.98
WH-37.12-Prop	2614.5	2-year	0.85	260.11	260.39	260.37	260.43	0.012992	0.9	0.99	8.29	0.76
WH-37.12-Prop	2614.5	5-year	1.17	260.11	260.42	260.39	260.47	0.01148	0.97	1.33	11.26	0.73
WH-37.12-Prop	2614.5	10-year	2.03	260.11	260.49	260.47	260.54	0.010093	1.12	2.38	20.15	0.72
WH-37.12-Prop	2614.5	25-year	2.53	260.11	260.52	260.5	260.57	0.008942	1.14	3.05	21.36	0.69
WH-37.12-Prop	2614.5	50-year	2.95	260.11	260.54	260.52	260.6	0.008308	1.16	3.58	23.26	0.68
WH-37.12-Prop	2614.5	100-year	3.35	260.11	260.59	260.54	260.63	0.005627	1.05	4.71	26.53	0.57
WH-37.12-Prop	2614.5	Regional	9.55	260.11	260.79	260.71	260.85	0.005741	1.43	11.06	37.64	0.62
WH-37.12-Prop	2564.81	2-year	0.85	259.73	260.09	259.98	260.11	0.003683	0.59	1.43	7.23	0.42
WH-37.12-Prop	2564.81	5-year	1.17	259.73	260.13	260.01	260.15	0.003797	0.66	1.82	10.64	0.44
WH-37.12-Prop	2564.81	10-year	2.03	259.73	260.21	260.09	260.24	0.003838	0.81	2.82	14.65	0.46
WH-37.12-Prop	2564.81	25-year	2.53	259.73	260.24	260.13	260.28	0.004206	0.9	3.3	15.82	0.49
WH-37.12-Prop	2564.81	50-year	2.95	259.73	260.27	260.16	260.31	0.00433	0.96	3.68	16.21	0.5

Reach	River Sta	Profile	Q Total	Min Ch El	W.S. Elev	Crit W.S.	E.G. Elev	E.G. Slope	Vel Chnl	Flow Area	Top Width	Froude # Chl
			(m3/s)	(m)	(m)	(m)	(m)	(m/m)	(m/s)	(m2)	(m)	
WH-37.12-Prop	2564.81	100-year	3.35	259.73	260.24	260.18	260.31	0.007418	1.19	3.29	15.81	0.65
WH-37.12-Prop	2564.81	Regional	9.55	259.73	260.62	260.42	260.67	0.002351	1.11	13.65	37.52	0.42
WH-37.12-Prop	2515.12	2-year	0.85	259.48	259.69	259.69	259.74	0.02132	1.03	1	10.45	0.97
WH-37.12-Prop	2515.12	5-year	1.17	259.48	259.72	259.72	259.77	0.023059	1.07	1.28	12.02	0.99
WH-37.12-Prop	2515.12	10-year	2.03	259.48	259.76	259.76	259.83	0.028786	1.26	1.85	14.63	1.1
WH-37.12-Prop	2515.12	25-year	2.53	259.48	259.79	259.79	259.86	0.025218	1.32	2.23	15.48	1.05
WH-37.12-Prop	2515.12	50-year	2.95	259.48	259.81	259.81	259.88	0.022707	1.35	2.56	16.57	1.02
WH-37.12-Prop	2515.12	100-year	3.35	259.48	259.89	259.82	259.94	0.007532	1.01	4.22	22.92	0.62
WH-37.12-Prop	2515.12	Regional	9.55	259.48	260.61	260.01	260.62	0.000327	0.5	29.05	42.3	0.16
WH-37.12-Prop	2493	2-year	0.85	259.12	259.44	259.34	259.46	0.003667	0.5	1.71	12.6	0.4
WH-37.12-Prop	2493	5-year	1.17	259.12	259.49	259.38	259.5	0.003063	0.53	2.38	17.74	0.38
WH-37.12-Prop	2493	10-year	2.03	259.12	259.62	259.44	259.63	0.001257	0.48	5.37	25.66	0.27
WH-37.12-Prop	2493	25-year	2.53	259.12	259.72	259.48	259.73	0.000646	0.41	8.13	28.3	0.2
WH-37.12-Prop	2493	50-year	2.95	259.12	259.81	259.5	259.81	0.000408	0.37	10.69	29.93	0.16
WH-37.12-Prop	2493	100-year	3.35	259.12	259.89	259.51	259.9	0.000286	0.34	13.58	36.94	0.14
WH-37.12-Prop	2493	Regional	9.55	259.12	260.61	259.68	260.62	0.00008	0.31	48.96	57.66	0.09
WH-37.12-Prop	2474	2-year	0.85	258.85	259.22	259.22	259.31	0.019273	1.39	0.63	3.75	0.96
WH-37.12-Prop	2474	5-year	1.17	258.85	259.27	259.27	259.38	0.01562	1.47	0.86	4.74	0.9
WH-37.12-Prop	2474	10-year	2.03	258.85	259.51	259.37	259.58	0.004674	1.22	1.89	22.83	0.55
WH-37.12-Prop	2474	25-year	2.53	258.85	259.63	259.42	259.7	0.003297	1.19	2.43	33.18	0.48
WH-37.12-Prop	2474	50-year	2.95	258.85	259.73	259.45	259.79	0.002684	1.18	2.85	36.25	0.44
WH-37.12-Prop	2474	100-year	3.35	258.85	259.82	259.49	259.88	0.002293	1.17	3.24	39.33	0.41
WH-37.12-Prop	2474	Regional	9.55	258.85	260.61	259.89	260.61	0.000104	0.39	42.88	57.03	0.1
WH-37.12-Prop	2454		Culvert									
WH-37.12-Prop	2429	2-year	0.85	258.92	259.19	259.19	259.27	0.022451	1.27	0.67	4.06	1
WH-37.12-Prop	2429	5-year	1.17	258.92	259.23	259.23	259.33	0.019736	1.35	0.87	4.46	0.96
WH-37.12-Prop	2429	10-year	2.03	258.92	259.36	259.31	259.46	0.010677	1.39	1.52	5.47	0.77
WH-37.12-Prop	2429	25-year	2.53	258.92	259.43	259.37	259.53	0.008782	1.43	1.9	6	0.72
WH-37.12-Prop	2429	50-year	2.95	258.92	259.48	259.4	259.58	0.007859	1.46	2.2	6.26	0.7
WH-37.12-Prop	2429	100-year	3.35	258.92	259.52	259.43	259.63	0.007221	1.49	2.48	6.45	0.68
WH-37.12-Prop	2429	Regional	9.55	258.92	260	259.79	260.16	0.004772	1.9	6.22	15.67	0.62
WH-37.12-Prop	2380	2-year	0.85	258.52	259.05	258.8	259.06	0.001238	0.5	1.76	5.18	0.26
WH-37.12-Prop	2380	5-year	1.17	258.52	259.11	258.84	259.13	0.001334	0.58	2.12	5.5	0.27
WH-37.12-Prop	2380	10-year	2.03	258.52	259.25	258.94	259.28	0.001579	0.75	2.93	5.98	0.31
WH-37.12-Prop	2380	25-year	2.53	258.52	259.32	258.99	259.35	0.001708	0.84	3.32	6.24	0.33
WH-37.12-Prop	2380	50-year	2.95	258.52	259.37	259.02	259.4	0.001809	0.9	3.62	6.44	0.34
WH-37.12-Prop	2380	100-year	3.35	258.52	259.41	259.06	259.45	0.001893	0.96	3.9	6.62	0.35
WH-37.12-Prop	2380	Regional	9.55	258.52	259.86	259.44	259.98	0.002748	1.58	7.39	9.38	0.46
WH-37.12-Prop	2364.8	2-year	0.85	258.55	259.02	258.8	259.04	0.00138	0.55	1.6	4.76	0.28
WH-37.12-Prop	2364.8	5-year	1.17	258.55	259.09	258.84	259.11	0.00148	0.63	1.92	5.06	0.3
WH-37.12-Prop	2364.8	10-year	2.03	258.55	259.22	258.95	259.26	0.001701	0.81	2.64	5.67	0.34
WH-37.12-Prop	2364.8	25-year	2.53	258.55	259.29	258.99	259.33	0.001796	0.89	3	5.92	0.35
WH-37.12-Prop	2364.8	50-year	2.95	258.55	259.33	259.03	259.38	0.001872	0.95	3.27	6.13	0.36
WH-37.12-Prop	2364.8	100-year	3.35	258.55	259.37	259.06	259.42	0.001929	1	3.53	6.32	0.37
WH-37.12-Prop	2364.8	Regional	9.55	258.55	259.82	259.45	259.94	0.002141	1.45	6.87	9.04	0.43
WH-37.12-Prop	2314	2-year	0.85	258.53	258.92	258.77	258.94	0.00296	0.69	1.24	4.34	0.4
WH-37.12-Prop	2314	5-year	1.17	258.53	258.97	258.81	259	0.003285	0.81	1.47	4.65	0.43
WH-37.12-Prop	2314	10-year	2.03	258.53	259.06	258.9	259.12	0.00442	1.1	1.95	5.55	0.52
WH-37.12-Prop	2314	25-year	2.53	258.53	259.1	258.96	259.18	0.005002	1.24	2.19	5.76	0.56
WH-37.12-Prop	2314	50-year	2.95	258.53	259.13	259	259.22	0.005796	1.37	2.31	5.85	0.61
WH-37.12-Prop	2314	100-year	3.35	258.53	259.13	259.03	259.25	0.007287	1.55	2.33	5.86	0.68
WH-37.12-Prop	2314	Regional	9.55	258.53	259.42	259.42	259.71	0.010841	2.53	4.18	7	0.9
WH-37.12-Prop	2264.17	2-year	0.85	258.46	258.54	258.53	258.55	0.030325	0.58	1.8	40.24	0.93
WH-37.12-Prop	2264.17	5-year	1.17	258.46	258.55	258.54	258.57	0.030014	0.57	2.31	45.88	0.92

Reach	River Sta	Profile	Q Total	Min Ch El	W.S. Elev	Crit W.S.	E.G. Elev	E.G. Slope	Vel Chnl	Flow Area	Top Width	Froude # Chl
			(m3/s)	(m)	(m)	(m)	(m)	(m/m)	(m/s)	(m2)	(m)	
WH-37.12-Prop	2264.17	10-year	2.03	258.46	258.58	258.56	258.6	0.027231	0.64	3.54	55.49	0.91
WH-37.12-Prop	2264.17	25-year	2.53	258.46	258.59	258.58	258.61	0.02514	0.71	4.29	59.45	0.91
WH-37.12-Prop	2264.17	50-year	2.95	258.46	258.6	258.58	258.62	0.019974	0.72	5.1	61.17	0.84
WH-37.12-Prop	2264.17	100-year	3.35	258.46	258.62	258.59	258.64	0.014322	0.7	6.24	62.78	0.73
WH-37.12-Prop	2264.17	Regional	9.55	258.46	258.75	258.66	258.77	0.007493	0.9	14.75	69.21	0.61
WH-37.12-Prop	2213.86	2-year	0.85	258.06	258.23	258.17	258.24	0.002622	0.3	3.77	41.48	0.31
WH-37.12-Prop	2213.86	5-year	1.17	258.06	258.26	258.18	258.26	0.002441	0.33	4.69	42.03	0.31
WH-37.12-Prop	2213.86	10-year	2.03	258.06	258.3	258.21	258.31	0.002371	0.41	6.7	43.49	0.33
WH-37.12-Prop	2213.86	25-year	2.53	258.06	258.33	258.21	258.34	0.002248	0.45	7.85	44.56	0.33
WH-37.12-Prop	2213.86	50-year	2.95	258.06	258.34	258.22	258.35	0.002452	0.49	8.43	45.35	0.35
WH-37.12-Prop	2213.86	100-year	3.35	258.06	258.35	258.23	258.35	0.003016	0.54	8.58	45.64	0.38
WH-37.12-Prop	2213.86	Regional	9.55	258.06	258.52	258.33	258.53	0.003325	0.86	17.17	57.99	0.45
WH-37.12-Prop	2163.54	2-year	0.85	257.79	257.99	257.95	258.01	0.009319	0.67	1.45	22.69	0.63
WH-37.12-Prop	2163.54	5-year	1.17	257.79	258	257.98	258.03	0.01052	0.78	1.88	28.69	0.68
WH-37.12-Prop	2163.54	10-year	2.03	257.79	258.03	258.03	258.07	0.013166	0.97	2.87	33.19	0.77
WH-37.12-Prop	2163.54	25-year	2.53	257.79	258.04	258.04	258.09	0.015633	1.1	3.22	34.1	0.85
WH-37.12-Prop	2163.54	50-year	2.95	257.79	258.06	258.05	258.11	0.01343	1.09	3.84	35.14	0.8
WH-37.12-Prop	2163.54	100-year	3.35	257.79	258.1	258.06	258.13	0.007971	0.94	5.13	36.38	0.63
WH-37.12-Prop	2163.54	Regional	9.55	257.79	258.27	258.18	258.31	0.006049	1.18	11.78	42.57	0.6
WH-37.12-Prop	2113	2-year	0.85	257.5	257.76	257.72	257.77	0.003027	0.5	3.12	44.47	0.37
WH-37.12-Prop	2113	5-year	1.17	257.5	257.79	257.74	257.79	0.00275	0.5	4.1	45.6	0.36
WH-37.12-Prop	2113	10-year	2.03	257.5	257.94	257.77	257.94	0.000351	0.26	11.49	49.84	0.14
WH-37.12-Prop	2113	25-year	2.53	257.5	258.01	257.78	258.01	0.000246	0.25	14.8	51.42	0.12
WH-37.12-Prop	2113	50-year	2.95	257.5	258.05	257.79	258.05	0.000211	0.24	17.13	53.21	0.12
WH-37.12-Prop	2113	100-year	3.35	257.5	258.09	257.79	258.09	0.000195	0.25	19.13	54.67	0.11
WH-37.12-Prop	2113	Regional	9.55	257.5	258.22	257.88	258.23	0.000571	0.5	26.77	58.36	0.2
WH-37.12-Prop	2063	2-year	0.85	257.23	257.42	257.41	257.45	0.019453	0.83	1.53	27.21	0.86
WH-37.12-Prop	2063	5-year	1.17	257.23	257.43	257.43	257.47	0.027192	1.03	1.75	30.4	1.02
WH-37.12-Prop	2063	10-year	2.03	257.23	257.94	257.46	257.94	0.000026	0.1	32.38	73.31	0.04
WH-37.12-Prop	2063	25-year	2.53	257.23	258	257.49	258	0.000026	0.11	37.23	74.57	0.04
WH-37.12-Prop	2063	50-year	2.95	257.23	258.05	257.5	258.05	0.000027	0.12	40.59	76.07	0.04
WH-37.12-Prop	2063	100-year	3.35	257.23	258.09	257.5	258.09	0.000029	0.13	43.44	77.41	0.05
WH-37.12-Prop	2063	Regional	9.55	257.23	258.21	257.57	258.22	0.000127	0.29	53.7	82.4	0.1
WH-37.12-Prop	2027	2-year	0.57	256.94	257.25	257.17	257.25	0.001801	0.34	2.94	46.65	0.28
WH-37.12-Prop	2027	5-year	0.89	256.94	257.34	257.21	257.34	0.000319	0.19	8.94	81.53	0.13
WH-37.12-Prop	2027	10-year	2.29	256.94	257.94	257.27	257.94	0.000004	0.05	89.06	171.6	0.02
WH-37.12-Prop	2027	25-year	2.84	256.94	258	257.28	258	0.000004	0.05	100.51	177.8	0.02
WH-37.12-Prop	2027	50-year	3.29	256.94	258.05	257.29	258.05	0.000004	0.06	108.53	182.15	0.02
WH-37.12-Prop	2027	100-year	3.73	256.94	258.09	257.3	258.09	0.000005	0.06	115.36	185.38	0.02
WH-37.12-Prop	2027	Regional	10.6	256.94	258.21	257.38	258.21	0.000022	0.14	140.41	205.83	0.04
WH-37.12-Prop	2010	2-year	0.57	256.89	257.18	257.1	257.2	0.007381	0.63	0.9	22.09	0.55
WH-37.12-Prop	2010	5-year	0.89	256.89	257.32	257.15	257.33	0.001588	0.41	2.23	76.88	0.28
WH-37.12-Prop	2010	10-year	2.29	256.89	257.93	257.28	257.94	0.000106	0.26	9.23	165.4	0.09
WH-37.12-Prop	2010	25-year	2.84	256.89	258	257.31	258	0.000127	0.3	9.96	168.17	0.1
WH-37.12-Prop	2010	50-year	3.29	256.89	258.04	257.33	258.05	0.000144	0.33	10.46	169.84	0.11
WH-37.12-Prop	2010	100-year	3.73	256.89	258.08	257.34	258.08	0.000163	0.36	10.87	172.35	0.12
WH-37.12-Prop	2010	Regional	10.6	256.89	258.17	257.58	258.21	0.000984	0.93	11.88	177.68	0.29
WH-37.12-Prop	1992		Culvert									
WH-37.12-Prop	1979	2-year	0.57	256.79	257.11	257.01	257.12	0.003249	0.62	0.98	10.02	0.41
WH-37.12-Prop	1979	5-year	0.89	256.79	257.16	257.05	257.19	0.003943	0.78	1.23	16.6	0.46
WH-37.12-Prop	1979	10-year	2.29	256.79	257.28	257.2	257.36	0.007618	1.37	1.83	39.61	0.68
WH-37.12-Prop	1979	25-year	2.84	256.79	257.3	257.24	257.42	0.009805	1.61	1.95	41.41	0.78
WH-37.12-Prop	1979	50-year	3.29	256.79	257.31	257.28	257.46	0.011727	1.79	2.02	42.41	0.86
WH-37.12-Prop	1979	100-year	3.73	256.79	257.32	257.31	257.5	0.014141	1.99	2.06	42.56	0.95
WH-37.12-Prop	1979	Regional	10.6	256.79	257.69	257.69	258.05	0.012708	2.81	4.1	53.49	0.99

Reach	River Sta	Profile	Q Total	Min Ch El	W.S. Elev	Crit W.S.	E.G. Elev	E.G. Slope	Vel Chnl	Flow Area	Top Width	Froude # Chl
			(m3/s)	(m)	(m)	(m)	(m)	(m/m)	(m/s)	(m2)	(m)	
WH-37.12-Prop	1959	2-year	0.57	256.68	257.06		257.07	0.00191	0.52	1.24	11.69	0.32
WH-37.12-Prop	1959	5-year	0.89	256.68	257.1		257.12	0.002415	0.65	1.87	17.01	0.37
WH-37.12-Prop	1959	10-year	2.29	256.68	257.21		257.24	0.003203	0.91	4.91	36.73	0.44
WH-37.12-Prop	1959	25-year	2.84	256.68	257.24		257.27	0.00332	0.96	5.88	38.94	0.46
WH-37.12-Prop	1959	50-year	3.29	256.68	257.26		257.29	0.003256	0.99	6.79	40.7	0.45
WH-37.12-Prop	1959	100-year	3.73	256.68	257.28		257.31	0.003327	1.02	7.45	41.02	0.46
WH-37.12-Prop	1959	Regional	10.6	256.68	257.47		257.51	0.003495	1.3	16.12	48.5	0.5
WH-37.12-Prop	1911.97	2-year	0.57	256.62	256.84	256.83	256.87	0.016897	0.84	1.01	16.28	0.83
WH-37.12-Prop	1911.97	5-year	0.89	256.62	256.88	256.86	256.9	0.013546	0.82	1.63	20.76	0.75
WH-37.12-Prop	1911.97	10-year	2.29	256.62	256.94	256.93	256.98	0.013327	1.06	3.38	26.95	0.79
WH-37.12-Prop	1911.97	25-year	2.84	256.62	256.96	256.95	257	0.013598	1.14	3.87	27.72	0.81
WH-37.12-Prop	1911.97	50-year	3.29	256.62	256.98	256.96	257.02	0.01403	1.21	4.31	29.44	0.83
WH-37.12-Prop	1911.97	100-year	3.73	256.62	256.99	256.96	257.03	0.013369	1.24	4.75	29.68	0.82
WH-37.12-Prop	1911.97	Regional	10.6	256.62	257.15		257.22	0.012734	1.69	9.75	34.08	0.86
WH-37.12-Prop	1861.65	2-year	0.57	256.27	256.4		256.41	0.004662	0.41	1.94	24.58	0.42
WH-37.12-Prop	1861.65	5-year	0.89	256.27	256.43		256.43	0.005239	0.48	2.68	30.2	0.46
WH-37.12-Prop	1861.65	10-year	2.29	256.27	256.51		256.52	0.005206	0.68	5.22	34.84	0.5
WH-37.12-Prop	1861.65	25-year	2.84	256.27	256.53		256.54	0.005077	0.72	6.04	35.38	0.5
WH-37.12-Prop	1861.65	50-year	3.29	256.27	256.55		256.56	0.005082	0.76	6.62	35.76	0.51
WH-37.12-Prop	1861.65	100-year	3.73	256.27	256.56		256.58	0.005116	0.8	7.16	36.11	0.51
WH-37.12-Prop	1861.65	Regional	10.6	256.27	256.75		256.78	0.00485	1.13	14.64	42.75	0.55
WH-37.12-Prop	1811.34	2-year	0.57	256.05	256.22		256.22	0.004617	0.45	1.95	27.95	0.43
WH-37.12-Prop	1811.34	5-year	0.89	256.05	256.25		256.25	0.004078	0.5	2.86	33.56	0.42
WH-37.12-Prop	1811.34	10-year	2.29	256.05	256.33		256.34	0.003411	0.62	6.04	38.84	0.42
WH-37.12-Prop	1811.34	25-year	2.84	256.05	256.36		256.37	0.003409	0.67	7.06	41.21	0.42
WH-37.12-Prop	1811.34	50-year	3.29	256.05	256.38		256.39	0.003316	0.69	7.85	42.03	0.42
WH-37.12-Prop	1811.34	100-year	3.73	256.05	256.4		256.41	0.003138	0.71	8.7	42.85	0.42
WH-37.12-Prop	1811.34	Regional	10.6	256.05	256.59		256.61	0.003103	0.98	17.87	51.82	0.45
WH-37.12-Prop	1761.02	2-year	0.57	255.86	256.06	256	256.07	0.002075	0.37	2.35	26.38	0.3
WH-37.12-Prop	1761.02	5-year	0.89	255.86	256.09	256.02	256.1	0.002335	0.44	3.15	28.79	0.33
WH-37.12-Prop	1761.02	10-year	2.29	255.86	256.19	256.09	256.2	0.002484	0.6	6.21	36.14	0.37
WH-37.12-Prop	1761.02	25-year	2.84	255.86	256.21	256.09	256.22	0.002604	0.65	7.21	38.47	0.38
WH-37.12-Prop	1761.02	50-year	3.29	255.86	256.23	256.11	256.24	0.002622	0.69	8	40.22	0.39
WH-37.12-Prop	1761.02	100-year	3.73	255.86	256.25	256.12	256.26	0.002795	0.73	8.74	43.31	0.4
WH-37.12-Prop	1761.02	Regional	10.6	255.86	256.42	256.27	256.45	0.003461	1.07	17.34	57.37	0.48
WH-37.12-Prop	1710.71	2-year	0.57	255.72	255.91		255.91	0.004742	0.51	1.9	27.78	0.45
WH-37.12-Prop	1710.71	5-year	0.89	255.72	255.94		255.94	0.004253	0.55	2.76	30.58	0.44
WH-37.12-Prop	1710.71	10-year	2.29	255.72	256.01		256.03	0.004418	0.73	5.48	42.26	0.48
WH-37.12-Prop	1710.71	25-year	2.84	255.72	256.03		256.05	0.004452	0.77	6.46	47.93	0.49
WH-37.12-Prop	1710.71	50-year	3.29	255.72	256.05		256.07	0.004235	0.79	7.44	53.1	0.48
WH-37.12-Prop	1710.71	100-year	3.73	255.72	256.07		256.08	0.004301	0.82	8.16	57.05	0.49
WH-37.12-Prop	1710.71	Regional	10.6	255.72	256.21		256.24	0.004679	1.12	18.12	77.72	0.54
WH-37.12-Prop	1660.39	2-year	0.57	255.63	255.71		255.71	0.003773	0.23	2.47	38.46	0.34
WH-37.12-Prop	1660.39	5-year	0.89	255.63	255.72		255.73	0.004512	0.31	3.17	42.72	0.39
WH-37.12-Prop	1660.39	10-year	2.29	255.63	255.78		255.79	0.005529	0.52	5.65	47.58	0.48
WH-37.12-Prop	1660.39	25-year	2.84	255.63	255.8		255.81	0.00547	0.57	6.57	50.01	0.49
WH-37.12-Prop	1660.39	50-year	3.29	255.63	255.81		255.82	0.005841	0.61	7.07	50.81	0.51
WH-37.12-Prop	1660.39	100-year	3.73	255.63	255.83		255.84	0.005377	0.64	8.02	52.02	0.5
WH-37.12-Prop	1660.39	Regional	10.6	255.63	255.98		256	0.004938	0.94	16.7	61.8	0.53
WH-37.12-Prop	1610.08	2-year	0.6	255.38	255.48		255.48	0.005222	0.23	2.5	41.22	0.38
WH-37.12-Prop	1610.08	5-year	0.96	255.38	255.5		255.51	0.004087	0.28	3.73	48.86	0.36
WH-37.12-Prop	1610.08	10-year	2.38	255.38	255.57		255.58	0.00337	0.42	7.39	57.1	0.37
WH-37.12-Prop	1610.08	25-year	2.98	255.38	255.6		255.6	0.003017	0.45	8.92	58.26	0.37
WH-37.12-Prop	1610.08	50-year	3.44	255.38	255.61		255.62	0.00295	0.47	9.84	59.29	0.37
WH-37.12-Prop	1610.08	100-year	3.91	255.38	255.63		255.64	0.00282	0.49	10.83	60.39	0.37

Reach	River Sta	Profile	Q Total	Min Ch El	W.S. Elev	Crit W.S.	E.G. Elev	E.G. Slope	Vel Chnl	Flow Area	Top Width	Froude # Chl
			(m3/s)	(m)	(m)	(m)	(m)	(m/m)	(m/s)	(m2)	(m)	
WH-37.12-Prop	1610.08	Regional	11.67	255.38	255.82		255.83	0.002464	0.73	22.69	65.85	0.38
WH-37.12-Prop	1559	2-year	0.6	255.06	255.29		255.3	0.003555	0.44	1.88	21.35	0.39
WH-37.12-Prop	1559	5-year	0.96	255.06	255.32		255.33	0.004165	0.54	2.47	23.33	0.43
WH-37.12-Prop	1559	10-year	2.38	255.06	255.4		255.42	0.004094	0.72	5.08	38.59	0.46
WH-37.12-Prop	1559	25-year	2.98	255.06	255.44		255.46	0.003888	0.76	6.47	41.23	0.46
WH-37.12-Prop	1559	50-year	3.44	255.06	255.45		255.47	0.003955	0.8	7.12	41.96	0.47
WH-37.12-Prop	1559	100-year	3.91	255.06	255.47		255.49	0.004036	0.83	7.77	42.69	0.48
WH-37.12-Prop	1559	Regional	11.67	255.06	255.66		255.7	0.004132	1.16	16.66	51.88	0.52
WH-37.12-Prop	1509	2-year	0.6	254.93	255.04	254.99	255.04	0.008278	0.4	1.56	20.44	0.52
WH-37.12-Prop	1509	5-year	0.96	254.93	255.07	255.01	255.08	0.006607	0.44	2.39	23.76	0.49
WH-37.12-Prop	1509	10-year	2.38	254.93	255.15	255.07	255.17	0.007471	0.67	4.54	32.77	0.57
WH-37.12-Prop	1509	25-year	2.98	254.93	255.17	255.1	255.19	0.008619	0.77	5.05	34.69	0.62
WH-37.12-Prop	1509	50-year	3.44	254.93	255.19	255.11	255.21	0.008835	0.85	5.89	38.93	0.64
WH-37.12-Prop	1509	100-year	3.91	254.93	255.2	255.11	255.22	0.008878	0.89	6.4	39.61	0.65
WH-37.12-Prop	1509	Regional	11.67	254.93	255.33	255.26	255.39	0.012032	1.47	11.93	44.71	0.83
WH-37.12-Prop	1459	2-year	0.6	254.55	254.77	254.75	254.79	0.005331	0.68	1.58	26.01	0.5
WH-37.12-Prop	1459	5-year	0.96	254.55	254.79		254.82	0.00685	0.83	2.16	29.01	0.58
WH-37.12-Prop	1459	10-year	2.38	254.55	254.86		254.89	0.00678	1	4.81	44.77	0.61
WH-37.12-Prop	1459	25-year	2.98	254.55	254.89		254.91	0.006166	1.02	6	48.3	0.59
WH-37.12-Prop	1459	50-year	3.44	254.55	254.9		254.93	0.006325	1.06	6.67	50.93	0.6
WH-37.12-Prop	1459	100-year	3.91	254.55	254.92		254.94	0.006282	1.09	7.4	53.22	0.6
WH-37.12-Prop	1459	Regional	11.67	254.55	255.1		255.13	0.004549	1.24	17.81	59.18	0.55
WH-37.12-Prop	1408.82	2-year	0.6	254.26	254.45		254.46	0.008024	0.64	1.34	17.52	0.58
WH-37.12-Prop	1408.82	5-year	0.96	254.26	254.49		254.51	0.005683	0.64	2.37	27.92	0.51
WH-37.12-Prop	1408.82	10-year	2.38	254.26	254.58		254.6	0.005317	0.82	5.13	38.5	0.53
WH-37.12-Prop	1408.82	25-year	2.98	254.26	254.6		254.62	0.005639	0.89	5.94	39.44	0.55
WH-37.12-Prop	1408.82	50-year	3.44	254.26	254.62		254.64	0.005199	0.9	6.75	40.34	0.53
WH-37.12-Prop	1408.82	100-year	3.91	254.26	254.63		254.65	0.005447	0.95	7.26	40.84	0.55
WH-37.12-Prop	1408.82	Regional	11.67	254.26	254.77		254.82	0.008135	1.48	13.03	43.17	0.71
WH-37.12-Prop	1358.5	2-year	0.6	253.8	254.1		254.13	0.006141	0.72	0.97	13.51	0.54
WH-37.12-Prop	1358.5	5-year	0.96	253.8	254.13	254.11	254.17	0.008763	0.94	1.41	21.49	0.65
WH-37.12-Prop	1358.5	10-year	2.38	253.8	254.2	254.2	254.25	0.010911	1.27	3.47	34.9	0.76
WH-37.12-Prop	1358.5	25-year	2.98	253.8	254.22	254.22	254.27	0.009802	1.27	4.4	35.75	0.74
WH-37.12-Prop	1358.5	50-year	3.44	253.8	254.22	254.22	254.29	0.012287	1.44	4.51	35.8	0.82
WH-37.12-Prop	1358.5	100-year	3.91	253.8	254.24	254.24	254.3	0.011509	1.44	5.1	36.11	0.81
WH-37.12-Prop	1358.5	Regional	11.67	253.8	254.45		254.5	0.006575	1.51	14.01	45.66	0.66
WH-37.12-Prop	1308.19	2-year	0.6	253.56	253.83		253.84	0.005102	0.6	1.21	14.17	0.48
WH-37.12-Prop	1308.19	5-year	0.96	253.56	253.88	253.82	253.89	0.003616	0.6	2.55	35.43	0.42
WH-37.12-Prop	1308.19	10-year	2.38	253.56	254.02		254.03	0.001246	0.5	8.35	43.71	0.27
WH-37.12-Prop	1308.19	25-year	2.98	253.56	254.06		254.07	0.001217	0.53	9.88	44.97	0.27
WH-37.12-Prop	1308.19	50-year	3.44	253.56	254.08		254.09	0.00121	0.55	10.92	45.5	0.27
WH-37.12-Prop	1308.19	100-year	3.91	253.56	254.11		254.11	0.001194	0.56	11.99	46.16	0.27
WH-37.12-Prop	1308.19	Regional	11.67	253.56	254.33		254.35	0.001542	0.84	22.62	49.34	0.33
WH-37.12-Prop	1257.87	2-year	0.72	253.18	253.52		253.55	0.006418	0.74	0.97	5.19	0.55
WH-37.12-Prop	1257.87	5-year	1.17	253.18	253.59		253.63	0.006793	0.87	1.38	9.85	0.58
WH-37.12-Prop	1257.87	10-year	4.22	253.18	253.74	253.74	253.81	0.009407	1.39	5.15	42.78	0.74
WH-37.12-Prop	1257.87	25-year	5.36	253.18	253.77	253.76	253.84	0.00925	1.46	6.67	52.69	0.74
WH-37.12-Prop	1257.87	50-year	6.24	253.18	253.8	253.8	253.87	0.008305	1.45	8.42	59.4	0.71
WH-37.12-Prop	1257.87	100-year	7.06	253.18	253.81	253.81	253.88	0.008939	1.53	9.08	63.46	0.74
WH-37.12-Prop	1257.87	Regional	20.1	253.18	253.95	253.95	254.05	0.010751	2.03	21.53	97.18	0.85
WH-37.12-Prop	1207.56	2-year	0.72	252.71	252.99	252.97	253.05	0.017019	1.12	0.65	3.91	0.87
WH-37.12-Prop	1207.56	5-year	1.17	252.71	253.06	253.03	253.14	0.015561	1.25	0.93	4.39	0.87
WH-37.12-Prop	1207.56	10-year	4.22	252.71	253.33	253.33	253.39	0.005666	1.26	6.76	56	0.6
WH-37.12-Prop	1207.56	25-year	5.36	252.71	253.34	253.34	253.42	0.007514	1.48	7.45	58.12	0.69
WH-37.12-Prop	1207.56	50-year	6.24	252.71	253.36	253.36	253.44	0.007818	1.55	8.45	64.7	0.71

Reach	River Sta	Profile	Q Total	Min Ch El	W.S. Elev	Crit W.S.	E.G. Elev	E.G. Slope	Vel Chnl	Flow Area	Top Width	Froude # Chl
			(m3/s)	(m)	(m)	(m)	(m)	(m/m)	(m/s)	(m2)	(m)	
WH-37.12-Prop	1207.56	100-year	7.06	252.71	253.38	253.38	253.46	0.007872	1.59	9.78	70.1	0.71
WH-37.12-Prop	1207.56	Regional	20.1	252.71	253.57		253.63	0.006313	1.76	24.08	80.62	0.67
WH-37.12-Prop	1157.24	2-year	0.72	252.16	252.5		252.54	0.006674	0.92	0.82	4.21	0.58
WH-37.12-Prop	1157.24	5-year	1.17	252.16	252.57	252.49	252.63	0.007297	1.13	1.22	8.12	0.63
WH-37.12-Prop	1157.24	10-year	4.22	252.16	252.78	252.77	252.89	0.009096	1.76	4.15	20.32	0.77
WH-37.12-Prop	1157.24	25-year	5.36	252.16	252.83	252.83	252.95	0.009441	1.9	5.38	28.26	0.8
WH-37.12-Prop	1157.24	50-year	6.24	252.16	252.88	252.88	252.98	0.007671	1.82	7.1	34.37	0.73
WH-37.12-Prop	1157.24	100-year	7.06	252.16	252.92	252.92	253.01	0.006741	1.77	8.35	35.82	0.69
WH-37.12-Prop	1157.24	Regional	20.1	252.16	253.13		253.26	0.009406	2.5	16.48	41.91	0.85
WH-37.12-Prop	1107	2-year	0.72	252	252.31		252.32	0.002696	0.46	1.69	14.21	0.35
WH-37.12-Prop	1107	5-year	1.17	252	252.34		252.36	0.003703	0.61	2.27	19.46	0.43
WH-37.12-Prop	1107	10-year	4.22	252	252.5		252.53	0.004791	1	5.94	29.1	0.53
WH-37.12-Prop	1107	25-year	5.36	252	252.54		252.58	0.004673	1.06	7.29	33.53	0.53
WH-37.12-Prop	1107	50-year	6.24	252	252.57		252.61	0.004646	1.11	8.28	35.59	0.54
WH-37.12-Prop	1107	100-year	7.06	252	252.59		252.64	0.004567	1.14	9.23	38.12	0.54
WH-37.12-Prop	1107	Regional	20.1	252	252.86		252.93	0.003932	1.45	22.49	50.75	0.54
WH-37.12-Prop	1057	2-year	0.72	251.83	252.09		252.11	0.006639	0.63	1.54	19.46	0.53
WH-37.12-Prop	1057	5-year	1.17	251.83	252.14		252.16	0.004263	0.63	2.78	25.86	0.45
WH-37.12-Prop	1057	10-year	4.22	251.83	252.31		252.33	0.003544	0.86	7.58	31.46	0.46
WH-37.12-Prop	1057	25-year	5.36	251.83	252.33		252.36	0.004188	0.98	8.42	31.84	0.5
WH-37.12-Prop	1057	50-year	6.24	251.83	252.36		252.39	0.004319	1.04	9.24	32.44	0.51
WH-37.12-Prop	1057	100-year	7.06	251.83	252.38		252.42	0.004613	1.1	9.87	34.08	0.53
WH-37.12-Prop	1057	Regional	20.1	251.83	252.6		252.68	0.006527	1.73	18.51	43.15	0.68
WH-37.12-Prop	1007	2-year	0.72	251.49	251.84		251.86	0.004403	0.68	1.08	5.62	0.47
WH-37.12-Prop	1007	5-year	1.17	251.49	251.88		251.92	0.006377	0.92	1.34	7.4	0.58
WH-37.12-Prop	1007	10-year	4.22	251.49	252.04	252.03	252.1	0.006709	1.3	6.38	47.07	0.64
WH-37.12-Prop	1007	25-year	5.36	251.49	252.08		252.13	0.00589	1.29	8.23	48.17	0.61
WH-37.12-Prop	1007	50-year	6.24	251.49	252.11		252.15	0.005352	1.29	9.7	51.35	0.59
WH-37.12-Prop	1007	100-year	7.06	251.49	252.13		252.18	0.005134	1.3	10.95	55.38	0.58
WH-37.12-Prop	1007	Regional	20.1	251.49	252.39		252.43	0.003593	1.43	27.84	71.09	0.52
WH-37.12-Prop	955.98	2-year	0.72	251.35	251.67		251.68	0.002576	0.54	2.09	30.19	0.36
WH-37.12-Prop	955.98	5-year	1.17	251.35	251.71		251.73	0.002328	0.58	3.62	35.19	0.35
WH-37.12-Prop	955.98	10-year	4.22	251.35	251.86		251.88	0.002659	0.82	9.12	39.42	0.4
WH-37.12-Prop	955.98	25-year	5.36	251.35	251.89		251.91	0.002941	0.91	10.35	39.76	0.43
WH-37.12-Prop	955.98	50-year	6.24	251.35	251.92		251.94	0.002982	0.95	11.41	40.04	0.44
WH-37.12-Prop	955.98	100-year	7.06	251.35	251.94		251.97	0.003052	0.99	12.36	40.99	0.45
WH-37.12-Prop	955.98	Regional	20.1	251.35	252.2		252.25	0.003682	1.43	23.58	46.47	0.53
WH-37.12-Prop	906	2-year	0.72	251.1	251.39	251.34	251.43	0.012517	0.91	0.9	12.83	0.74
WH-37.12-Prop	906	5-year	1.17	251.1	251.43	251.42	251.47	0.012435	1.01	1.58	20.67	0.76
WH-37.12-Prop	906	10-year	4.22	251.1	251.57	251.55	251.61	0.007613	1.16	6.54	42.31	0.65
WH-37.12-Prop	906	25-year	5.36	251.1	251.61	251.56	251.64	0.006379	1.15	8.3	43.31	0.61
WH-37.12-Prop	906	50-year	6.24	251.1	251.63	251.57	251.67	0.006107	1.18	9.37	43.8	0.6
WH-37.12-Prop	906	100-year	7.06	251.1	251.65	251.59	251.69	0.006005	1.21	10.25	44.14	0.6
WH-37.12-Prop	906	Regional	20.1	251.1	251.94	251.75	251.99	0.003853	1.38	24.02	50.41	0.53
WH-37.12-Prop	855.35	2-year	0.72	250.77	251.08		251.09	0.003886	0.65	1.44	11.76	0.44
WH-37.12-Prop	855.35	5-year	1.17	250.77	251.14		251.16	0.003644	0.71	2.43	20.1	0.44
WH-37.12-Prop	855.35	10-year	4.22	250.77	251.31		251.34	0.004512	1.01	6.81	30.13	0.52
WH-37.12-Prop	855.35	25-year	5.36	250.77	251.34		251.38	0.005101	1.13	7.71	31.53	0.56
WH-37.12-Prop	855.35	50-year	6.24	250.77	251.37		251.41	0.005092	1.18	8.61	32.66	0.56
WH-37.12-Prop	855.35	100-year	7.06	250.77	251.39		251.43	0.005033	1.22	9.44	33.28	0.56
WH-37.12-Prop	855.35	Regional	20.1	250.77	251.82		251.86	0.002251	1.25	25.37	40.2	0.42
WH-37.12-Prop	805.04	2-year	0.72	250.31	250.61	250.61	250.71	0.022044	1.33	0.54	2.97	1
WH-37.12-Prop	805.04	5-year	1.17	250.31	250.7	250.7	250.8	0.019502	1.44	0.82	4.91	0.97
WH-37.12-Prop	805.04	10-year	4.22	250.31	250.9	250.9	250.99	0.012574	1.63	4.51	30.86	0.85
WH-37.12-Prop	805.04	25-year	5.36	250.31	250.94	250.94	251.02	0.010591	1.62	5.99	33.18	0.8

Reach	River Sta	Profile	Q Total	Min Ch El	W.S. Elev	Crit W.S.	E.G. Elev	E.G. Slope	Vel Chnl	Flow Area	Top Width	Froude # Chl
			(m3/s)	(m)	(m)	(m)	(m)	(m/m)	(m/s)	(m2)	(m)	
WH-37.12-Prop	805.04	50-year	6.24	250.31	250.96	250.96	251.05	0.011091	1.7	6.62	33.6	0.82
WH-37.12-Prop	805.04	100-year	7.06	250.31	250.98	250.98	251.07	0.011279	1.76	7.22	33.99	0.83
WH-37.12-Prop	805.04	Regional	20.1	250.31	251.79		251.8	0.000593	0.8	42.71	50.89	0.23
1	751	2-year	1.23	249.78	250.41		250.42	0.006649	0.15	5.39	13.31	0.07
1	751	5-year	2.01	249.78	250.51		250.52	0.007089	0.18	6.84	14.44	0.07
1	751	10-year	7.89	249.78	250.86		250.89	0.008119	0.25	15.36	42.71	0.08
1	751	25-year	9.92	249.78	250.92		250.96	0.008412	0.27	18.17	46.76	0.08
1	751	50-year	11.6	249.78	250.96		251	0.008167	0.27	20.06	47.64	0.08
1	751	100-year	13.28	249.78	251		251.04	0.007692	0.27	22.04	48.56	0.08
1	751	Regional	36.89	249.78	251.78		251.8	0.001314	0.16	65.74	62.07	0.04
1	704.41	2-year	1.23	249.62	250.01		250.06	0.008986	1.04	1.18	4.86	0.67
1	704.41	5-year	2.01	249.62	250.13		250.19	0.00756	1.09	1.84	6.17	0.64
1	704.41	10-year	7.89	249.62	250.53		250.62	0.004543	1.37	7.59	26.36	0.56
1	704.41	25-year	9.92	249.62	250.62		250.7	0.003989	1.4	10.3	35.41	0.53
1	704.41	50-year	11.6	249.62	250.68		250.76	0.003594	1.4	12.55	37.9	0.51
1	704.41	100-year	13.28	249.62	250.74		250.81	0.003333	1.42	14.78	41.78	0.5
1	704.41	Regional	36.89	249.62	251.74		251.77	0.000487	0.93	66.12	57.49	0.22
1	654	2-year	1.23	249.32	249.78		249.81	0.003048	0.81	1.56	4.81	0.42
1	654	5-year	2.01	249.32	249.88		249.93	0.003534	1.02	2.09	5.83	0.47
1	654	10-year	7.89	249.32	250.23		250.37	0.005252	1.81	6.46	16.13	0.63
1	654	25-year	9.92	249.32	250.31		250.46	0.005569	1.97	7.68	17.67	0.66
1	654	50-year	11.6	249.32	250.36		250.52	0.005743	2.08	8.69	19.29	0.68
1	654	100-year	13.28	249.32	250.45	250.34	250.6	0.005012	2.06	10.49	24.7	0.64
1	654	Regional	36.89	249.32	251.73		251.74	0.00035	0.93	82.83	75.43	0.19
1	603.78	2-year	1.23	248.9	249.36	249.36	249.47	0.021295	1.5	0.82	3.66	1.01
1	603.78	5-year	2.01	248.9	249.48	249.48	249.58	0.019783	1.41	1.43	6.73	0.97
1	603.78	10-year	7.89	248.9	249.8	249.8	250	0.012372	2.02	4.5	13.35	0.89
1	603.78	25-year	9.92	248.9	249.88	249.88	250.09	0.01161	2.14	5.53	14.15	0.88
1	603.78	50-year	11.6	248.9	249.93	249.93	250.16	0.011292	2.24	6.31	14.86	0.88
1	603.78	100-year	13.28	248.9	249.94	249.94	250.23	0.01384	2.51	6.49	15.05	0.98
1	603.78	Regional	36.89	248.9	251.72		251.73	0.000182	0.68	95.36	66.35	0.14
1	554	2-year	1.23	248.63	249.03		249.05	0.002572	0.64	1.97	8.23	0.38
1	554	5-year	2.01	248.63	249.14		249.17	0.002355	0.75	3.06	13.45	0.38
1	554	10-year	7.89	248.63	249.53		249.58	0.001918	1.07	11.63	38.68	0.38
1	554	25-year	9.92	248.63	249.59		249.64	0.002133	1.18	14.08	47.2	0.41
1	554	50-year	11.6	248.63	249.64		249.69	0.002226	1.25	16.31	49.27	0.42
1	554	100-year	13.28	248.63	249.66		249.72	0.002466	1.34	17.68	50.33	0.45
1	554	Regional	36.89	248.63	251.72		251.72	0.000045	0.4	157.44	75.59	0.07
1	503.15	2-year	1.23	248.39	248.82		248.86	0.005907	0.93	1.32	4.71	0.56
1	503.15	5-year	2.01	248.39	248.92	248.8	248.98	0.006352	1.09	1.85	5.43	0.6
1	503.15	10-year	7.89	248.39	249.29	249.22	249.4	0.006199	1.56	7.6	44.3	0.65
1	503.15	25-year	9.92	248.39	249.34	249.34	249.45	0.006385	1.67	9.83	46.4	0.67
1	503.15	50-year	11.6	248.39	249.36	249.36	249.49	0.00721	1.82	10.8	46.81	0.71
1	503.15	100-year	13.28	248.39	249.4	249.4	249.52	0.006588	1.81	12.73	47.48	0.69
1	503.15	Regional	36.89	248.39	251.72		251.72	0.000045	0.39	151.34	69.15	0.07
1	453	2-year	1.23	248.1	248.41		248.47	0.011007	1.07	1.16	6.09	0.74
1	453	5-year	2.01	248.1	248.48		248.56	0.011164	1.3	1.63	7.05	0.78
1	453	10-year	7.89	248.1	248.8	248.8	249	0.010337	2.07	5.1	20.5	0.85
1	453	25-year	9.92	248.1	248.91	248.91	249.07	0.007727	2	7.92	28.91	0.75
1	453	50-year	11.6	248.1	248.96	248.96	249.12	0.007326	2.04	9.47	31.75	0.74
1	453	100-year	13.28	248.1	249.02	249.02	249.17	0.006366	2	11.6	39.02	0.7
1	453	Regional	36.89	248.1	251.72		251.72	0.000028	0.35	186.99	79.79	0.06
1	403	2-year	1.23	247.7	248.09		248.12	0.004465	0.81	1.55	6.26	0.49
1	403	5-year	2.01	247.7	248.19		248.23	0.004091	0.95	2.36	10.2	0.49
1	403	10-year	7.89	247.7	248.61		248.69	0.003176	1.39	7.86	16.59	0.49

Reach	River Sta	Profile	Q Total	Min Ch El	W.S. Elev	Crit W.S.	E.G. Elev	E.G. Slope	Vel Chnl	Flow Area	Top Width	Froude # Chl
			(m3/s)	(m)	(m)	(m)	(m)	(m/m)	(m/s)	(m2)	(m)	
1	403	25-year	9.92	247.7	248.66		248.77	0.004029	1.62	8.73	18.66	0.56
1	403	50-year	11.6	247.7	248.7		248.83	0.004653	1.79	9.42	19.85	0.61
1	403	100-year	13.28	247.7	248.73		248.89	0.005265	1.96	10.12	21.48	0.65
1	403	Regional	36.89	247.7	251.72		251.72	0.000026	0.36	198.31	89.59	0.06
1	353	2-year	1.23	247.4	247.76		247.82	0.008612	1.1	1.14	4.66	0.67
1	353	5-year	2.01	247.4	247.85		247.94	0.008537	1.32	1.61	5.93	0.7
1	353	10-year	7.89	247.4	248.23	248.23	248.42	0.008677	2.14	5.18	18.69	0.8
1	353	25-year	9.92	247.4	248.34	248.34	248.51	0.006744	2.08	7.82	26.24	0.72
1	353	50-year	11.6	247.4	248.39	248.39	248.56	0.006436	2.12	9.36	30.62	0.71
1	353	100-year	13.28	247.4	248.44	248.44	248.6	0.00629	2.16	10.92	36.33	0.71
1	353	Regional	36.89	247.4	251.72		251.72	0.000016	0.3	215.63	75.57	0.05
1	301.89	2-year	1.23	247.01	247.37		247.41	0.007363	0.95	1.29	5.35	0.61
1	301.89	5-year	2.01	247.01	247.45	247.37	247.51	0.008323	1.11	1.96	12.93	0.67
1	301.89	10-year	7.89	247.01	247.66	247.66	247.82	0.012761	1.96	5.3	16.78	0.9
1	301.89	25-year	9.92	247.01	247.72	247.72	247.9	0.012511	2.09	6.3	17.15	0.91
1	301.89	50-year	11.6	247.01	247.83		247.97	0.007902	1.88	8.53	22.96	0.74
1	301.89	100-year	13.28	247.01	248.03		248.11	0.003287	1.45	14.1	32.2	0.5
1	301.89	Regional	36.89	247.01	251.72		251.72	0.000011	0.25	236.52	72.98	0.04
1	251.57	2-year	1.23	246.49	246.81	246.81	246.87	0.015585	1.18	1.53	16.55	0.86
1	251.57	5-year	2.01	246.49	246.87	246.87	246.92	0.013884	1.2	2.57	20.48	0.82
1	251.57	10-year	7.89	246.49	247.45		247.46	0.000626	0.59	19.81	32.8	0.22
1	251.57	25-year	9.92	246.49	247.69		247.7	0.00034	0.52	27.92	34.34	0.17
1	251.57	50-year	11.6	246.49	247.87		247.88	0.000242	0.49	34.33	35.05	0.14
1	251.57	100-year	13.28	246.49	248.05		248.06	0.000189	0.48	40.53	35.81	0.13
1	251.57	Regional	36.89	246.49	251.72		251.72	0.00001	0.26	254.81	80.31	0.04
1	199	2-year	1.31	245.93	246.39		246.4	0.00162	0.56	2.38	7.6	0.31
1	199	5-year	2.15	245.93	246.55		246.57	0.001143	0.61	3.72	8.71	0.27
1	199	10-year	8.49	245.93	247.42		247.44	0.000401	0.7	17.53	24.23	0.19
1	199	25-year	10.77	245.93	247.67		247.68	0.000307	0.69	23.91	27.67	0.17
1	199	50-year	12.63	245.93	247.85		247.87	0.000255	0.67	29.35	30.05	0.16
1	199	100-year	14.46	245.93	248.03		248.05	0.000222	0.67	34.98	33.45	0.15
1	199	Regional	40.02	245.93	251.71		251.72	0.000013	0.32	230.73	72.08	0.04
1	191	2-year	1.31	245.61	246.38	246	246.4	0.000628	0.54	3.24	10.54	0.21
1	191	5-year	2.15	245.61	246.55	246.12	246.57	0.000683	0.65	4.62	12.51	0.23
1	191	10-year	8.49	245.61	247.4	246.56	247.43	0.000565	0.94	12.15	22.86	0.23
1	191	25-year	10.77	245.61	247.64	246.65	247.68	0.000541	1.01	14.29	29.46	0.23
1	191	50-year	12.63	245.61	247.83	246.71	247.87	0.000526	1.06	15.91	34.42	0.23
1	191	100-year	14.46	245.61	248	246.77	248.04	0.000512	1.1	17.43	37.4	0.23
1	191	Regional	40.02	245.61	251.68	247.43	251.71	0.000124	1.03	49.9	89.05	0.13
1	170		Culvert									
1	146	2-year	1.31	245.62	245.86	245.86	245.93	0.02324	1.15	1.14	9.31	0.99
1	146	5-year	2.15	245.62	245.92	245.92	246.01	0.01942	1.31	1.64	10.02	0.96
1	146	10-year	8.49	245.62	246.19	246.19	246.42	0.015938	2.14	3.97	12.84	1.01
1	146	25-year	10.77	245.62	246.27	246.27	246.54	0.014524	2.28	4.72	13.78	0.99
1	146	50-year	12.63	245.62	246.33	246.33	246.63	0.01423	2.42	5.22	14.41	1
1	146	100-year	14.46	245.62	246.39	246.39	246.72	0.013625	2.52	5.73	14.99	0.99
1	146	Regional	40.02	245.62	247.03	247.03	247.67	0.010952	3.55	11.28	27.44	0.99
1	119	2-year	1.31	244.95	245.41		245.42	0.001643	0.58	2.28	6.91	0.31
1	119	5-year	2.15	244.95	245.51		245.53	0.001943	0.75	3	7.38	0.35
1	119	10-year	8.49	244.95	245.94		246.03	0.002745	1.38	7.78	17.67	0.46
1	119	25-year	10.77	244.95	246.06		246.15	0.002668	1.48	10.05	22.76	0.47
1	119	50-year	12.63	244.95	246.13		246.24	0.002804	1.59	12.04	32.18	0.48
1	119	100-year	14.46	244.95	246.2		246.3	0.002718	1.62	14.33	37.08	0.48
1	119	Regional	40.02	244.95	246.74		246.84	0.00224	1.91	38.5	48	0.47

Reach	River Sta	Profile	Q Total	Min Ch El	W.S. Elev	Crit W.S.	E.G. Elev	E.G. Slope	Vel Chnl	Flow Area	Top Width	Froude # Chl
			(m3/s)	(m)	(m)	(m)	(m)	(m/m)	(m/s)	(m2)	(m)	
1	93	2-year	1.31	244.93	245.26	245.23	245.33	0.01152	1.24	1.19	7.19	0.77
1	93	5-year	2.15	244.93	245.34	245.32	245.43	0.010537	1.42	1.84	7.93	0.77
1	93	10-year	8.49	244.93	245.65	245.65	245.89	0.013666	2.47	4.53	9.63	0.97
1	93	25-year	10.77	244.93	245.74	245.74	246.02	0.013352	2.66	5.43	10.41	0.98
1	93	50-year	12.63	244.93	245.82	245.82	246.1	0.012079	2.72	6.42	14.11	0.95
1	93	100-year	14.46	244.93	245.9	245.9	246.18	0.011025	2.75	7.63	17.02	0.92
1	93	Regional	40.02	244.93	246.51	246.51	246.75	0.007033	3.09	26.67	44.43	0.8
1	50.31	2-year	1.31	244.35	244.66	244.65	244.74	0.016204	1.26	1.06	6.17	0.87
1	50.31	5-year	2.15	244.35	244.74	244.73	244.84	0.016949	1.47	1.63	9.92	0.92
1	50.31	10-year	8.49	244.35	245.01		245.12	0.011879	1.76	6.57	21.46	0.85
1	50.31	25-year	10.77	244.35	245.07	245.03	245.2	0.011375	1.88	7.85	21.97	0.85
1	50.31	50-year	12.63	244.35	245.11		245.25	0.010935	1.95	8.86	22.43	0.84
1	50.31	100-year	14.46	244.35	245.14		245.3	0.011282	2.06	9.62	22.85	0.87
1	50.31	Regional	40.02	244.35	245.49	245.49	245.8	0.013404	3.08	19.48	34.39	1.02
1	0	2-year	1.31	243.72	243.95	243.92	244.01	0.01299	1.03	1.27	7.03	0.77
1	0	5-year	2.15	243.72	244.02	243.99	244.1	0.013005	1.23	1.75	7.39	0.81
1	0	10-year	8.49	243.72	244.33	244.29	244.49	0.012992	1.78	4.78	12.11	0.88
1	0	25-year	10.77	243.72	244.39	244.37	244.58	0.012995	1.94	5.7	16.18	0.9
1	0	50-year	12.63	243.72	244.44	244.43	244.65	0.012991	2.05	6.49	18.65	0.92
1	0	100-year	14.46	243.72	244.48	244.48	244.71	0.012459	2.13	7.4	20.48	0.91
1	0	Regional	40.02	243.72	244.93	244.93	245.24	0.009058	2.7	20.39	37.7	0.86

APPENDIX 6-4-3

HECRAS Summary Output Tables

Existing Riparian Model Output

Reach	River Sta	Profile	Volume	Q Total	Min Ch El	W.S. Elev	Crit W.S.	E.G. Elev	E.G. Slope	Vel Chnl	Flow Area	Top Width	Froude # Chl
			(1000 m3)	(m3/s)	(m)	(m)	(m)	(m)	(m/m)	(m/s)	(m2)	(m)	
2	5139	2-year	2.86	0.09	275.88	275.95	275.95	275.97	0.064736	0.65	0.14	3.43	0.97
2	5139	5-year	4.51	0.16	275.88	275.99	275.98	276	0.039825	0.61	0.27	4.81	0.79
2	5139	10-year	19.38	0.9	275.88	276.1	276.07	276.14	0.023624	0.86	1.09	7.69	0.71
2	5139	25-year	23	1.12	275.88	276.12	276.09	276.17	0.023861	0.93	1.25	7.88	0.73
2	5139	50-year	25.68	1.3	275.88	276.14	276.1	276.19	0.023255	0.97	1.38	8.04	0.73
2	5139	100-year	28.38	1.48	275.88	276.16	276.12	276.21	0.020477	0.98	1.58	8.44	0.7
2	5139	Regional	62.22	3.39	275.88	276.3	276.23	276.37	0.021344	1.32	3.08	14.81	0.76
2	5080	2-year	2.85	0.09	274.88	275.06	274.98	275.06	0.006913	0.35	0.25	2.51	0.36
2	5080	5-year	4.49	0.16	274.88	275.09	275.02	275.1	0.008501	0.44	0.35	2.96	0.41
2	5080	10-year	19.31	0.9	274.88	275.27	275.2	275.29	0.010369	0.75	1.44	13.24	0.5
2	5080	25-year	22.92	1.12	274.88	275.29	275.24	275.32	0.010431	0.8	1.77	16.24	0.51
2	5080	50-year	25.59	1.3	274.88	275.3	275.26	275.33	0.010963	0.85	2	17.53	0.53
2	5080	100-year	28.28	1.48	274.88	275.31	275.28	275.34	0.011956	0.91	2.15	17.85	0.56
2	5080	Regional	62.03	3.39	274.88	275.4	275.36	275.45	0.013087	1.16	3.94	20.26	0.61
2	5045	2-year	2.84	0.09	274.55	274.62		274.63	0.026913	0.39	0.25	7.24	0.62
2	5045	5-year	4.48	0.16	274.55	274.64		274.65	0.021823	0.41	0.4	8.5	0.58
2	5045	10-year	19.26	0.9	274.55	274.72		274.74	0.026427	0.69	1.42	20.79	0.7
2	5045	25-year	22.85	1.12	274.55	274.73		274.75	0.025838	0.72	1.71	22.16	0.71
2	5045	50-year	25.51	1.3	274.55	274.74		274.77	0.023368	0.69	2.04	25.03	0.67
2	5045	100-year	28.19	1.48	274.55	274.76		274.78	0.020974	0.68	2.36	26.21	0.64
2	5045	Regional	61.87	3.39	274.55	274.83		274.86	0.01906	0.9	4.42	33.3	0.66
2	5008	2-year	2.82	0.09	274.26	274.33		274.33	0.003859	0.14	0.57	12.97	0.23
2	5008	5-year	4.46	0.16	274.26	274.35		274.35	0.004189	0.15	0.86	16.97	0.24
2	5008	10-year	19.16	0.9	274.26	274.45		274.45	0.003578	0.22	3.59	41.15	0.25
2	5008	25-year	22.74	1.12	274.26	274.47		274.47	0.003689	0.23	4.21	43.12	0.26
2	5008	50-year	25.38	1.3	274.26	274.48		274.48	0.003638	0.25	4.68	44.2	0.26
2	5008	100-year	28.05	1.48	274.26	274.48		274.49	0.003794	0.27	5.05	45.71	0.27
2	5008	Regional	61.6	3.39	274.26	274.56		274.57	0.003747	0.37	8.92	52.44	0.29
2	4946.01	2-year	2.79	0.09	273.73	273.83		273.83	0.012997	0.31	0.29	6.58	0.44
2	4946.01	5-year	4.4	0.16	273.73	273.85		273.86	0.011337	0.34	0.49	10.8	0.43
2	4946.01	10-year	18.96	0.9	273.73	273.92	273.9	273.94	0.017322	0.65	1.78	26.93	0.59
2	4946.01	25-year	22.51	1.12	273.73	273.93	273.92	273.95	0.019067	0.72	2.04	28.96	0.63
2	4946.01	50-year	25.13	1.3	273.73	273.94	273.93	273.96	0.018991	0.74	2.29	29.29	0.63
2	4946.01	100-year	27.77	1.48	273.73	273.95	273.94	273.97	0.018618	0.76	2.53	29.75	0.63
2	4946.01	Regional	61.13	3.39	273.73	274.01	273.99	274.04	0.020962	1.01	4.36	34.4	0.71
2	4885.21	2-year	2.77	0.09	273.02	273.19		273.2	0.008646	0.26	0.35	6.85	0.36
2	4885.21	5-year	4.37	0.16	273.02	273.21		273.22	0.009907	0.32	0.49	8.05	0.4
2	4885.21	10-year	18.84	0.9	273.02	273.32		273.33	0.006667	0.47	2.38	29.27	0.38
2	4885.21	25-year	22.36	1.12	273.02	273.34		273.34	0.006226	0.49	2.97	34.34	0.38
2	4885.21	50-year	24.97	1.3	273.02	273.34		273.35	0.006476	0.52	3.3	38.63	0.39
2	4885.21	100-year	27.59	1.48	273.02	273.35		273.36	0.006573	0.54	3.65	40.92	0.39
2	4885.21	Regional	60.81	3.39	273.02	273.43		273.44	0.006329	0.66	7.34	55.93	0.41
2	4831.92	2-year	2.75	0.09	272.78	272.81		272.81	0.00538	0.08	0.36	5.8	0.22
2	4831.92	5-year	4.34	0.16	272.78	272.84		272.85	0.004631	0.13	0.64	9.82	0.24
2	4831.92	10-year	18.7	0.9	272.78	272.96		272.96	0.006513	0.32	2.6	28.26	0.34
2	4831.92	25-year	22.19	1.12	272.78	272.97		272.97	0.007197	0.36	2.94	30.43	0.37
2	4831.92	50-year	24.77	1.3	272.78	272.98		272.99	0.006522	0.37	3.46	35.27	0.36
2	4831.92	100-year	27.38	1.48	272.78	272.99	272.92	273	0.006473	0.38	3.82	37.36	0.36
2	4831.92	Regional	60.38	3.39	272.78	273.07	272.98	273.08	0.00689	0.53	7.95	64.54	0.4
2	4800.81	2-year	2.74	0.09	272.63	272.64	272.6	272.65	0.008675	0.05	0.35	14.91	0.24
2	4800.81	5-year	4.32	0.16	272.63	272.66	272.64	272.66	0.008765	0.13	0.74	26.7	0.31
2	4800.81	10-year	18.61	0.9	272.63	272.72	272.68	272.72	0.007954	0.28	3.1	50.1	0.36
2	4800.81	25-year	22.09	1.12	272.63	272.73	272.69	272.73	0.00817	0.31	3.6	53.41	0.37
2	4800.81	50-year	24.66	1.3	272.63	272.73	272.7	272.74	0.009223	0.34	3.82	55.15	0.4
2	4800.81	100-year	27.26	1.48	272.63	272.74		272.74	0.010068	0.37	4.06	56.92	0.42
2	4800.81	Regional	60.15	3.39	272.63	272.78		272.79	0.012252	0.55	6.9	67.26	0.5

Reach	River Sta	Profile	Volume	Q Total	Min Ch El	W.S. Elev	Crit W.S.	E.G. Elev	E.G. Slope	Vel Chnl	Flow Area	Top Width	Froude # Chl
			(1000 m3)	(m3/s)	(m)	(m)	(m)	(m)	(m/m)	(m/s)	(m2)	(m)	
2	4749.98	2-year	2.69	0.09	272.21	272.32		272.32	0.001825	0.13	0.78	19.3	0.17
2	4749.98	5-year	4.24	0.16	272.21	272.34		272.34	0.002156	0.17	1.16	30.03	0.19
2	4749.98	10-year	18.26	0.9	272.21	272.41		272.41	0.002138	0.26	4.93	64.93	0.22
2	4749.98	25-year	21.68	1.12	272.21	272.43		272.43	0.002008	0.27	5.88	67.39	0.21
2	4749.98	50-year	24.21	1.3	272.21	272.44		272.44	0.001886	0.27	6.66	69.18	0.21
2	4749.98	100-year	26.76	1.48	272.21	272.45		272.45	0.001828	0.28	7.4	70.91	0.21
2	4749.98	Regional	59.17	3.39	272.21	272.54		272.55	0.001247	0.3	15.15	88.28	0.18
2	4701.43	2-year	2.66	0.09	272.05	272.18		272.18	0.004801	0.19	0.5	11.53	0.27
2	4701.43	5-year	4.19	0.16	272.05	272.2		272.2	0.004381	0.2	0.8	14.99	0.26
2	4701.43	10-year	18.08	0.9	272.05	272.3		272.31	0.003033	0.32	3.39	32.22	0.26
2	4701.43	25-year	21.47	1.12	272.05	272.32		272.33	0.002997	0.34	3.95	32.74	0.26
2	4701.43	50-year	23.97	1.3	272.05	272.34		272.34	0.002831	0.35	4.44	33.55	0.26
2	4701.43	100-year	26.5	1.48	272.05	272.35		272.36	0.002692	0.35	4.95	35.65	0.25
2	4701.43	Regional	58.65	3.39	272.05	272.46		272.47	0.00235	0.45	9.38	44.58	0.25
2	4651.75	2-year	2.63	0.09	271.87	272.01		272.01	0.002605	0.15	0.59	10.22	0.2
2	4651.75	5-year	4.15	0.16	271.87	272.04		272.04	0.002608	0.18	0.87	13.02	0.21
2	4651.75	10-year	17.94	0.9	271.87	272.14		272.15	0.003941	0.38	2.54	19.17	0.3
2	4651.75	25-year	21.3	1.12	271.87	272.16		272.17	0.003969	0.42	2.95	19.83	0.3
2	4651.75	50-year	23.78	1.3	271.87	272.18		272.18	0.004	0.44	3.25	20.72	0.31
2	4651.75	100-year	26.29	1.48	271.87	272.19		272.2	0.004022	0.46	3.55	21.11	0.31
2	4651.75	Regional	58.28	3.39	271.87	272.31		272.33	0.003805	0.6	6.52	26.79	0.33
2	4602.06	2-year	2.61	0.09	271.67	271.75	271.73	271.76	0.016073	0.35	0.26	5.98	0.49
2	4602.06	5-year	4.12	0.16	271.67	271.77	271.75	271.78	0.013861	0.38	0.43	7.99	0.48
2	4602.06	10-year	17.83	0.9	271.67	271.91	271.83	271.92	0.006016	0.49	2.07	14.94	0.37
2	4602.06	25-year	21.17	1.12	271.67	271.93	271.83	271.95	0.005625	0.51	2.45	15.61	0.37
2	4602.06	50-year	23.64	1.3	271.67	271.95	271.87	271.96	0.00546	0.54	2.73	16.14	0.37
2	4602.06	100-year	26.13	1.48	271.67	271.97	271.88	271.98	0.005229	0.55	3.02	16.68	0.36
2	4602.06	Regional	57.99	3.39	271.67	272.09	271.95	272.11	0.005637	0.75	5.22	20.2	0.4
2	4559.74	2-year	2.6	0.09	271.26	271.39		271.39	0.005517	0.23	0.38	6.13	0.3
2	4559.74	5-year	4.1	0.16	271.26	271.42	271.35	271.42	0.005726	0.29	0.53	6.43	0.32
2	4559.74	10-year	17.76	0.9	271.26	271.51		271.54	0.015802	0.76	1.22	8.92	0.59
2	4559.74	25-year	21.1	1.12	271.26	271.52		271.56	0.019678	0.89	1.32	9.49	0.67
2	4559.74	50-year	23.55	1.3	271.26	271.53	271.5	271.58	0.019998	0.94	1.46	10.63	0.68
2	4559.74	100-year	26.04	1.48	271.26	271.54	271.51	271.59	0.021984	1.02	1.55	11.73	0.72
2	4559.74	Regional	57.83	3.39	271.26	271.64	271.64	271.72	0.023095	1.35	3.09	18.85	0.79
2	4492.85	2-year	2.58	0.09	270.66	270.74		270.74	0.02172	0.36	0.25	5.99	0.55
2	4492.85	5-year	4.07	0.16	270.66	270.75		270.76	0.019697	0.42	0.37	6.67	0.56
2	4492.85	10-year	17.66	0.9	270.66	270.9		270.91	0.006476	0.55	2.01	17.46	0.39
2	4492.85	25-year	20.98	1.12	270.66	270.93		270.94	0.005683	0.56	2.48	18.22	0.37
2	4492.85	50-year	23.43	1.3	270.66	270.94		270.95	0.005651	0.58	2.76	18.63	0.38
2	4492.85	100-year	25.9	1.48	270.66	270.96		270.97	0.005355	0.59	3.09	19.64	0.37
2	4492.85	Regional	57.57	3.39	270.66	271.08		271.1	0.004777	0.73	5.9	24.33	0.38
2	4460.53	2-year	2.56	0.09	270.52	270.62		270.63	0.001309	0.14	0.73	11.27	0.15
2	4460.53	5-year	4.05	0.16	270.52	270.65		270.65	0.001359	0.17	1.05	12.96	0.16
2	4460.53	10-year	17.57	0.9	270.52	270.77		270.78	0.002449	0.37	2.92	18.18	0.25
2	4460.53	25-year	20.88	1.12	270.52	270.79		270.79	0.002893	0.42	3.2	18.54	0.27
2	4460.53	50-year	23.31	1.3	270.52	270.8		270.81	0.002928	0.44	3.52	18.94	0.28
2	4460.53	100-year	25.78	1.48	270.52	270.82		270.82	0.003146	0.47	3.75	19.29	0.29
2	4460.53	Regional	57.35	3.39	270.52	270.91		270.93	0.004894	0.72	5.71	21.86	0.38
2	4397.62	2-year	2.53	0.12	270.27	270.32	270.32	270.33	0.05453	0.4	0.32	15.38	0.81
2	4397.62	5-year	4.01	0.2	270.27	270.33	270.33	270.34	0.071429	0.52	0.44	18.63	0.95
2	4397.62	10-year	17.42	1.19	270.27	270.4	270.37	270.41	0.02019	0.55	2.44	35.92	0.6
2	4397.62	25-year	20.71	1.47	270.27	270.41	270.39	270.43	0.017038	0.56	2.96	36.89	0.57
2	4397.62	50-year	23.12	1.69	270.27	270.42	270.39	270.44	0.016843	0.59	3.24	37.22	0.57
2	4397.62	100-year	25.58	1.9	270.27	270.43	270.4	270.44	0.016604	0.61	3.51	37.54	0.57
2	4397.62	Regional	56.97	4.94	270.27	270.54		270.56	0.008436	0.68	8.06	42.57	0.46

Reach	River Sta	Profile	Volume	Q Total	Min Ch El	W.S. Elev	Crit W.S.	E.G. Elev	E.G. Slope	Vel Chnl	Flow Area	Top Width	Froude # Chl
			(1000 m3)	(m3/s)	(m)	(m)	(m)	(m)	(m/m)	(m/s)	(m2)	(m)	
2	4359	2-year	2.5	0.12	269.83	269.94		269.94	0.00159	0.15	0.85	15.9	0.17
2	4359	5-year	3.96	0.2	269.83	269.96		269.96	0.002064	0.2	1.2	21.35	0.2
2	4359	10-year	17.25	1.19	269.83	270.06		270.06	0.003009	0.38	3.94	30.1	0.27
2	4359	25-year	20.51	1.47	269.83	270.08		270.08	0.003158	0.41	4.49	30.99	0.28
2	4359	50-year	22.9	1.69	269.83	270.09		270.1	0.003074	0.42	4.96	31.54	0.28
2	4359	100-year	25.34	1.9	269.83	270.11		270.11	0.003008	0.43	5.41	32.18	0.28
2	4359	Regional	56.47	4.94	269.83	270.22		270.24	0.004011	0.64	9.52	43.4	0.34
2	4304.29	2-year	2.47	0.12	269.78	269.8		269.8	0.008149	0.06	0.67	27.24	0.25
2	4304.29	5-year	3.91	0.2	269.78	269.81		269.81	0.005775	0.1	1.21	35.64	0.25
2	4304.29	10-year	17.06	1.19	269.78	269.89		269.89	0.004462	0.25	4.18	45.22	0.28
2	4304.29	25-year	20.27	1.47	269.78	269.91		269.91	0.004039	0.28	5.1	47.61	0.28
2	4304.29	50-year	22.65	1.69	269.78	269.91		269.92	0.0047	0.31	5.29	47.75	0.3
2	4304.29	100-year	25.07	1.9	269.78	269.92		269.92	0.004808	0.32	5.67	48.02	0.31
2	4304.29	Regional	55.98	4.94	269.78	270.01		270.02	0.005098	0.5	10.37	54.85	0.35
2	4270.06	2-year	2.46	0.12	269.59	269.63	269.63	269.64	0.052745	0.32	0.27	10.74	0.75
2	4270.06	5-year	3.9	0.2	269.59	269.64	269.64	269.66	0.068158	0.46	0.36	11.41	0.91
2	4270.06	10-year	17.02	1.19	269.59	269.71	269.71	269.74	0.043799	0.78	1.75	29.54	0.88
2	4270.06	25-year	20.23	1.47	269.59	269.71	269.71	269.75	0.062653	0.95	1.81	29.79	1.05
2	4270.06	50-year	22.61	1.69	269.59	269.72	269.72	269.76	0.050551	0.92	2.12	30.67	0.97
2	4270.06	100-year	25.02	1.9	269.59	269.73	269.73	269.77	0.048103	0.95	2.34	32.3	0.95
2	4270.06	Regional	55.89	4.94	269.59	269.8	269.8	269.86	0.04137	1.23	4.77	39.52	0.96
2	4228.93	2-year	2.44	0.12	269.03	269.17		269.17	0.001444	0.15	0.86	14.23	0.16
2	4228.93	5-year	3.86	0.2	269.03	269.21		269.21	0.001124	0.17	1.4	16.06	0.15
2	4228.93	10-year	16.85	1.19	269.03	269.38		269.38	0.001086	0.3	5.06	26.72	0.17
2	4228.93	25-year	20.04	1.47	269.03	269.41		269.42	0.001112	0.32	5.9	28.59	0.18
2	4228.93	50-year	22.39	1.69	269.03	269.43		269.44	0.001097	0.33	6.55	29.73	0.18
2	4228.93	100-year	24.78	1.9	269.03	269.45		269.46	0.001079	0.34	7.17	30.53	0.18
2	4228.93	Regional	55.4	4.94	269.03	269.67		269.67	0.001002	0.44	15.03	43.62	0.18
2	4207.18	2-year	2.42	0.12	268.99	269.13		269.13	0.003027	0.2	0.59	7.71	0.23
2	4207.18	5-year	3.83	0.2	268.99	269.16		269.16	0.003164	0.24	0.84	8.47	0.24
2	4207.18	10-year	16.76	1.19	268.99	269.34		269.35	0.002856	0.43	2.93	14.93	0.27
2	4207.18	25-year	19.94	1.47	268.99	269.37		269.38	0.003021	0.47	3.35	15.67	0.28
2	4207.18	50-year	22.28	1.69	268.99	269.39		269.4	0.003021	0.49	3.7	16.55	0.29
2	4207.18	100-year	24.66	1.9	268.99	269.41		269.42	0.003015	0.51	4.04	17.37	0.29
2	4207.18	Regional	55.15	4.94	268.99	269.62		269.64	0.002756	0.69	8.5	24.39	0.3
2	4168.63	2-year	2.4	0.12	268.84	268.96		268.96	0.005714	0.26	0.44	6.03	0.31
2	4168.63	5-year	3.8	0.2	268.84	268.99		269	0.005793	0.31	0.64	6.86	0.33
2	4168.63	10-year	16.68	1.19	268.84	269.13		269.15	0.010156	0.68	1.75	9.89	0.49
2	4168.63	25-year	19.84	1.47	268.84	269.15		269.18	0.011441	0.77	1.95	10.45	0.53
2	4168.63	50-year	22.18	1.69	268.84	269.15		269.19	0.014222	0.87	1.99	10.56	0.59
2	4168.63	100-year	24.54	1.9	268.84	269.16		269.2	0.014942	0.92	2.12	10.94	0.61
2	4168.63	Regional	54.94	4.94	268.84	269.25	269.25	269.38	0.03125	1.66	3.23	13.67	0.93
2	4122.96	2-year	2.38	0.12	268.64	268.75		268.75	0.004056	0.22	0.54	7.68	0.26
2	4122.96	5-year	3.77	0.2	268.64	268.78		268.78	0.004096	0.27	0.76	8.58	0.28
2	4122.96	10-year	16.55	1.19	268.64	268.91		268.91	0.003281	0.37	4.32	45.64	0.28
2	4122.96	25-year	19.69	1.47	268.64	268.92		268.93	0.003202	0.38	5.19	49.68	0.28
2	4122.96	50-year	22.01	1.69	268.64	268.94		268.94	0.002969	0.38	5.89	51.43	0.27
2	4122.96	100-year	24.37	1.9	268.64	268.95		268.95	0.002948	0.4	6.47	51.94	0.27
2	4122.96	Regional	54.59	4.94	268.64	269.08		269.08	0.002113	0.46	14.31	71.37	0.25
2	4045.6	2-year	2.33	0.12	268.37	268.49	268.43	268.49	0.00272	0.17	0.68	11.04	0.21
2	4045.6	5-year	3.7	0.2	268.37	268.52	268.45	268.52	0.00262	0.21	1	13.01	0.22
2	4045.6	10-year	16.28	1.19	268.37	268.65	268.54	268.66	0.003462	0.43	3.09	20.02	0.29
2	4045.6	25-year	19.38	1.47	268.37	268.67	268.56	268.68	0.003804	0.48	3.53	22.33	0.31
2	4045.6	50-year	21.67	1.69	268.37	268.68	268.56	268.69	0.004008	0.51	3.84	23.08	0.32
2	4045.6	100-year	23.99	1.9	268.37	268.7	268.57	268.71	0.004007	0.53	4.19	23.63	0.32
2	4045.6	Regional	53.87	4.94	268.37	268.8	268.7	268.83	0.007146	0.87	6.91	29.58	0.46

Reach	River Sta	Profile	Volume	Q Total	Min Ch El	W.S. Elev	Crit W.S.	E.G. Elev	E.G. Slope	Vel Chnl	Flow Area	Top Width	Froude # Chl
			(1000 m3)	(m3/s)	(m)	(m)	(m)	(m)	(m/m)	(m/s)	(m2)	(m)	
2	4008.8	2-year	2.31	0.12	268.22	268.36	268.29	268.36	0.004584	0.24	0.49	6.64	0.28
2	4008.8	5-year	3.67	0.2	268.22	268.39	268.32	268.39	0.005343	0.28	0.74	12.79	0.31
2	4008.8	10-year	16.16	1.19	268.22	268.49	268.44	268.5	0.005223	0.45	3.48	42.55	0.35
2	4008.8	25-year	19.23	1.47	268.22	268.51	268.45	268.52	0.004887	0.47	4.37	48.95	0.34
2	4008.8	50-year	21.5	1.69	268.22	268.52	268.46	268.53	0.004994	0.49	4.89	54.57	0.35
2	4008.8	100-year	23.81	1.9	268.22	268.54	268.46	268.55	0.004598	0.49	5.67	57.22	0.34
2	4008.8	Regional	53.49	4.94	268.22	268.66	268.54	268.67	0.002752	0.51	13.71	73.53	0.28
2	3962.04	2-year	2.28	0.12	267.99	268.13		268.13	0.005729	0.2	0.57	11.78	0.29
2	3962.04	5-year	3.63	0.2	267.99	268.15		268.15	0.00523	0.23	0.89	14.44	0.29
2	3962.04	10-year	15.99	1.19	267.99	268.27		268.28	0.004039	0.38	3.17	21.25	0.3
2	3962.04	25-year	19.03	1.47	267.99	268.3		268.3	0.004071	0.42	3.64	22.11	0.31
2	3962.04	50-year	21.28	1.69	267.99	268.31		268.32	0.003911	0.43	4.05	24.8	0.31
2	3962.04	100-year	23.55	1.9	267.99	268.33		268.34	0.003945	0.46	4.4	25.96	0.31
2	3962.04	Regional	52.87	4.94	267.99	268.49		268.5	0.003332	0.6	9.33	34.83	0.31
2	3890.7	2-year	2.25	0.12	267.58	267.74		267.74	0.004965	0.25	0.46	6.19	0.29
2	3890.7	5-year	3.58	0.2	267.58	267.77		267.77	0.005617	0.29	0.7	8.26	0.32
2	3890.7	10-year	15.78	1.19	267.58	267.9		267.91	0.006565	0.53	2.5	19.02	0.39
2	3890.7	25-year	18.79	1.47	267.58	267.92		267.93	0.006873	0.58	2.87	19.57	0.41
2	3890.7	50-year	21.01	1.69	267.58	267.93		267.95	0.007189	0.62	3.11	19.92	0.42
2	3890.7	100-year	23.26	1.9	267.58	267.94		267.96	0.007025	0.64	3.41	20.36	0.42
2	3890.7	Regional	52.3	4.94	267.58	268.06		268.1	0.010075	0.99	5.96	25.63	0.54
2	3844.66	2-year	2.22	0.12	267.4	267.48		267.48	0.006896	0.22	0.55	12.93	0.32
2	3844.66	5-year	3.54	0.2	267.4	267.5		267.51	0.00592	0.26	0.83	14.18	0.31
2	3844.66	10-year	15.67	1.19	267.4	267.61		267.62	0.006699	0.5	2.86	26.41	0.39
2	3844.66	25-year	18.66	1.47	267.4	267.63		267.64	0.006507	0.54	3.44	29.13	0.39
2	3844.66	50-year	20.86	1.69	267.4	267.64		267.65	0.006264	0.55	3.85	32.63	0.39
2	3844.66	100-year	23.1	1.9	267.4	267.65		267.66	0.006583	0.59	4.25	35.33	0.4
2	3844.66	Regional	51.99	4.94	267.4	267.77		267.79	0.005235	0.7	9.07	42.36	0.39
2	3805.35	2-year	2.2	0.12	267.07	267.23	267.16	267.23	0.00547	0.25	0.47	6.88	0.3
2	3805.35	5-year	3.51	0.2	267.07	267.26	267.19	267.26	0.005954	0.29	0.69	10.31	0.33
2	3805.35	10-year	15.53	1.19	267.07	267.38	267.31	267.39	0.004353	0.43	3.36	27.68	0.32
2	3805.35	25-year	18.49	1.47	267.07	267.4	267.32	267.4	0.004361	0.46	3.91	30.31	0.32
2	3805.35	50-year	20.68	1.69	267.07	267.41	267.33	267.42	0.004268	0.47	4.34	32.05	0.32
2	3805.35	100-year	22.89	1.9	267.07	267.43	267.34	267.44	0.004346	0.5	4.87	34.94	0.33
2	3805.35	Regional	51.55	4.94	267.07	267.54	267.4	267.55	0.005218	0.71	9.57	53.4	0.39
2	3761.64	2-year	2.18	0.12	266.88	267		267	0.004695	0.23	0.51	7.51	0.28
2	3761.64	5-year	3.48	0.2	266.88	267.02		267.03	0.004935	0.28	0.72	8.98	0.3
2	3761.64	10-year	15.37	1.19	266.88	267.13		267.14	0.006204	0.53	2.98	34.45	0.38
2	3761.64	25-year	18.3	1.47	266.88	267.15		267.17	0.006002	0.56	3.72	38.22	0.38
2	3761.64	50-year	20.46	1.69	266.88	267.16		267.18	0.005974	0.57	4.15	40.29	0.38
2	3761.64	100-year	22.65	1.9	266.88	267.17		267.19	0.006476	0.61	4.48	42.51	0.4
2	3761.64	Regional	51.01	4.94	266.88	267.3		267.31	0.004206	0.65	10.87	58.53	0.35
2	3713.08	2-year	2.16	0.12	266.62	266.76	266.7	266.76	0.005107	0.24	0.49	8.81	0.29
2	3713.08	5-year	3.45	0.2	266.62	266.78	266.73	266.79	0.004815	0.29	0.77	13.44	0.3
2	3713.08	10-year	15.25	1.19	266.62	266.92	266.83	266.93	0.004049	0.46	3.07	20.34	0.32
2	3713.08	25-year	18.16	1.47	266.62	266.94	266.84	266.95	0.004105	0.5	3.53	21	0.32
2	3713.08	50-year	20.31	1.69	266.62	266.96	266.86	266.97	0.004027	0.52	3.9	21.64	0.32
2	3713.08	100-year	22.48	1.9	266.62	266.98	266.87	266.99	0.003939	0.53	4.28	22.91	0.32
2	3713.08	Regional	50.65	4.94	266.62	267.14	266.96	267.16	0.003855	0.72	9.23	36.88	0.35
2	3662.17	2-year	2.13	0.12	266.48	266.59	266.54	266.59	0.002354	0.17	0.75	14.39	0.2
2	3662.17	5-year	3.4	0.2	266.48	266.62	266.56	266.62	0.002231	0.2	1.16	17.24	0.2
2	3662.17	10-year	15.08	1.19	266.48	266.74	266.63	266.74	0.00301	0.4	3.51	22.19	0.27
2	3662.17	25-year	17.95	1.47	266.48	266.76	266.65	266.77	0.002974	0.42	4.09	23.36	0.27
2	3662.17	50-year	20.08	1.69	266.48	266.78	266.65	266.78	0.003075	0.45	4.45	24.15	0.28
2	3662.17	100-year	22.23	1.9	266.48	266.8	266.66	266.8	0.003117	0.47	4.93	27.08	0.29
2	3662.17	Regional	50.12	4.94	266.48	266.94	266.75	266.96	0.003458	0.66	9.64	37.62	0.33

Reach	River Sta	Profile	Volume	Q Total	Min Ch El	W.S. Elev	Crit W.S.	E.G. Elev	E.G. Slope	Vel Chnl	Flow Area	Top Width	Froude # Chl
			(1000 m3)	(m3/s)	(m)	(m)	(m)	(m)	(m/m)	(m/s)	(m2)	(m)	
2	3608.28	2-year	2.08	0.12	266.37	266.46	266.41	266.46	0.002763	0.13	0.83	17.58	0.2
2	3608.28	5-year	3.33	0.2	266.37	266.48	266.43	266.48	0.002421	0.15	1.26	21	0.2
2	3608.28	10-year	14.86	1.19	266.37	266.59	266.49	266.6	0.002481	0.31	4.29	30.53	0.24
2	3608.28	25-year	17.72	1.47	266.37	266.61	266.5	266.61	0.002822	0.34	4.75	31.4	0.26
2	3608.28	50-year	19.82	1.69	266.37	266.62	266.51	266.63	0.002698	0.36	5.27	32.1	0.25
2	3608.28	100-year	21.95	1.9	266.37	266.64	266.52	266.64	0.002772	0.38	5.65	32.47	0.26
2	3608.28	Regional	49.6	4.94	266.37	266.76	266.59	266.77	0.003282	0.56	10.14	38.59	0.3
2	3558.59	2-year	2.06	0.12	266.24	266.3	266.29	266.31	0.008663	0.16	0.6	20.21	0.32
2	3558.59	5-year	3.29	0.2	266.24	266.31	266.3	266.32	0.012782	0.23	0.78	21.83	0.41
2	3558.59	10-year	14.72	1.19	266.24	266.39	266.35	266.4	0.010326	0.46	2.74	28.51	0.45
2	3558.59	25-year	17.55	1.47	266.24	266.41	266.35	266.42	0.008305	0.47	3.39	29.74	0.41
2	3558.59	50-year	19.64	1.69	266.24	266.42	266.36	266.43	0.008997	0.51	3.65	30.49	0.44
2	3558.59	100-year	21.75	1.9	266.24	266.43	266.37	266.44	0.009183	0.54	3.92	30.76	0.44
2	3558.59	Regional	49.22	4.94	266.24	266.54	266.44	266.56	0.007756	0.72	7.9	38.34	0.45
2	3508.9	2-year	2.01	0.12	266.05	266.12		266.12	0.001811	0.1	1.14	30.97	0.16
2	3508.9	5-year	3.23	0.2	266.05	266.14		266.14	0.001544	0.12	1.78	35.71	0.16
2	3508.9	10-year	14.51	1.19	266.05	266.23		266.23	0.001668	0.23	5.75	47.57	0.19
2	3508.9	25-year	17.29	1.47	266.05	266.25		266.26	0.001658	0.25	6.82	51.08	0.19
2	3508.9	50-year	19.36	1.69	266.05	266.27		266.27	0.001507	0.25	7.66	51.95	0.19
2	3508.9	100-year	21.45	1.9	266.05	266.28		266.28	0.00162	0.27	8.08	52.38	0.2
2	3508.9	Regional	48.62	4.94	266.05	266.42		266.42	0.001412	0.36	16.11	63.08	0.2
2	3459.49	2-year	1.98	0.17	265.69	265.77	265.77	265.79	0.068109	0.64	0.27	6.62	0.99
2	3459.49	5-year	3.17	0.3	265.69	265.78	265.78	265.82	0.094855	0.86	0.35	7.73	1.2
2	3459.49	10-year	14.31	1.79	265.69	265.89	265.89	265.94	0.035888	1.07	2.02	20.79	0.88
2	3459.49	25-year	17.05	2.23	265.69	265.91	265.91	265.96	0.036686	1.15	2.34	22.17	0.9
2	3459.49	50-year	19.09	2.56	265.69	265.91	265.91	265.98	0.048108	1.32	2.34	22.19	1.04
2	3459.49	100-year	21.16	2.89	265.69	265.93	265.93	265.99	0.034903	1.23	2.9	24.88	0.9
2	3459.49	Regional	48.02	7.76	265.69	266.04	266.04	266.14	0.033079	1.62	5.91	30.51	0.95
2	3410	2-year	1.95	0.17	264.96	265.13		265.14	0.001225	0.19	0.95	8.09	0.16
2	3410	5-year	3.13	0.3	264.96	265.17		265.18	0.001522	0.24	1.31	10.44	0.19
2	3410	10-year	14.18	1.79	264.96	265.39		265.4	0.002516	0.53	3.78	12.59	0.27
2	3410	25-year	16.9	2.23	264.96	265.43		265.44	0.002679	0.59	4.31	14.67	0.29
2	3410	50-year	18.94	2.56	264.96	265.45		265.47	0.002822	0.63	4.71	17.51	0.3
2	3410	100-year	20.99	2.89	264.96	265.48		265.5	0.00305	0.67	5.19	19.25	0.31
2	3410	Regional	47.7	7.76	264.96	265.7		265.73	0.00398	0.99	10.45	27.23	0.38
2	3359.83	2-year	1.91	0.17	264.87	265.02		265.03	0.004136	0.36	0.55	8.85	0.39
2	3359.83	5-year	3.08	0.3	264.87	265.06		265.06	0.003711	0.4	0.88	10.35	0.38
2	3359.83	10-year	14	1.79	264.87	265.21		265.24	0.004734	0.77	3.17	20.62	0.49
2	3359.83	25-year	16.7	2.23	264.87	265.24		265.27	0.004669	0.82	3.78	22.37	0.5
2	3359.83	50-year	18.72	2.56	264.87	265.26		265.29	0.004748	0.86	4.22	23.63	0.51
2	3359.83	100-year	20.74	2.89	264.87	265.27		265.31	0.004941	0.91	4.56	24.01	0.52
2	3359.83	Regional	47.21	7.76	264.87	265.45		265.5	0.005401	1.29	9.15	28.89	0.59
2	3310.14	2-year	1.88	0.17	264.65	264.85		264.85	0.002861	0.33	0.59	9.26	0.33
2	3310.14	5-year	3.03	0.3	264.65	264.88		264.88	0.003123	0.39	0.95	15.05	0.36
2	3310.14	10-year	13.77	1.79	264.65	265.02		265.03	0.002835	0.63	4.87	35.36	0.39
2	3310.14	25-year	16.42	2.23	264.65	265.04		265.06	0.002993	0.68	5.67	37.24	0.4
2	3310.14	50-year	18.4	2.56	264.65	265.06		265.08	0.00296	0.7	6.31	38.2	0.41
2	3310.14	100-year	20.4	2.89	264.65	265.08		265.09	0.002806	0.71	7.01	38.78	0.4
2	3310.14	Regional	46.48	7.76	264.65	265.25		265.27	0.002766	0.94	14.53	48.8	0.43
2	3260	2-year	1.85	0.17	264.54	264.71		264.71	0.003095	0.35	0.69	14.02	0.35
2	3260	5-year	2.99	0.3	264.54	264.73		264.74	0.003483	0.42	1.05	16.02	0.38
2	3260	10-year	13.58	1.79	264.54	264.86		264.88	0.004377	0.76	4.03	27.55	0.48
2	3260	25-year	16.21	2.23	264.54	264.88		264.9	0.005155	0.86	4.45	28.14	0.53
2	3260	50-year	18.17	2.56	264.54	264.89		264.91	0.005696	0.93	4.73	28.48	0.56
2	3260	100-year	20.15	2.89	264.54	264.89		264.92	0.006474	1	4.92	28.71	0.6
2	3260	Regional	45.93	7.76	264.54	265.11		265.14	0.003774	1.11	12.03	37.23	0.5

Reach	River Sta	Profile	Volume	Q Total	Min Ch El	W.S. Elev	Crit W.S.	E.G. Elev	E.G. Slope	Vel Chnl	Flow Area	Top Width	Froude # Chl
			(1000 m3)	(m3/s)	(m)	(m)	(m)	(m)	(m/m)	(m/s)	(m2)	(m)	
2	3210.77	2-year	1.8	0.17	264.35	264.41		264.41	0.006099	0.18	0.74	14.31	0.38
2	3210.77	5-year	2.9	0.3	264.35	264.44		264.44	0.004981	0.22	1.21	20.51	0.37
2	3210.77	10-year	13.27	1.79	264.35	264.57		264.57	0.004505	0.44	4.65	34.9	0.42
2	3210.77	25-year	15.85	2.23	264.35	264.6		264.61	0.003551	0.46	5.87	38.35	0.39
2	3210.77	50-year	17.76	2.56	264.35	264.63		264.63	0.003042	0.48	6.89	40.07	0.37
2	3210.77	100-year	19.69	2.89	264.35	264.65		264.66	0.002424	0.47	7.99	40.99	0.34
2	3210.77	Regional	44.43	7.76	264.35	265.07		265.07	0.000365	0.39	30.7	65.84	0.16
2	3165.68	2-year	1.78	0.17	264.01	264.18	264.12	264.18	0.005892	0.37	0.47	6.81	0.45
2	3165.68	5-year	2.87	0.3	264.01	264.2	264.16	264.21	0.0061	0.44	0.68	8.25	0.47
2	3165.68	10-year	13.11	1.79	264.01	264.42	264.29	264.44	0.002378	0.64	3.4	14.37	0.36
2	3165.68	25-year	15.64	2.23	264.01	264.48	264.32	264.5	0.001929	0.64	4.26	15.04	0.34
2	3165.68	50-year	17.52	2.56	264.01	264.52	264.33	264.54	0.001706	0.65	4.89	15.49	0.32
2	3165.68	100-year	19.41	2.89	264.01	264.56	264.36	264.58	0.001536	0.65	5.51	15.95	0.31
2	3165.68	Regional	43.47	7.76	264.01	265.03	264.53	265.05	0.000762	0.74	14.4	22.49	0.25
2	3155.05	2-year	1.77	0.17	263.99	264.1	264.08	264.11	0.009131	0.44	0.39	6	0.55
2	3155.05	5-year	2.86	0.3	263.99	264.13	264.09	264.14	0.00883	0.52	0.57	6.57	0.57
2	3155.05	10-year	13.08	1.79	263.99	264.39	264.23	264.42	0.002388	0.68	2.78	9.23	0.37
2	3155.05	25-year	15.6	2.23	263.99	264.45	264.26	264.48	0.002121	0.71	3.34	9.6	0.36
2	3155.05	50-year	17.48	2.56	263.99	264.5	264.29	264.52	0.001984	0.74	3.75	9.9	0.35
2	3155.05	100-year	19.37	2.89	263.99	264.53	264.3	264.56	0.00187	0.76	4.15	10.19	0.35
2	3155.05	Regional	43.35	7.76	263.99	265	264.53	265.04	0.001224	0.96	9.88	15.19	0.32
2	3152.41	2-year	1.77	0.17	263.92	264.02	264.02	264.06	0.027686	0.79	0.22	3.15	0.97
2	3152.41	5-year	2.86	0.3	263.92	264.07	264.06	264.1	0.017577	0.81	0.37	3.71	0.82
2	3152.41	10-year	13.07	1.79	263.92	264.36	264.25	264.4	0.004361	0.88	2.09	7.21	0.5
2	3152.41	25-year	15.59	2.23	263.92	264.42	264.28	264.47	0.003805	0.92	2.52	7.62	0.48
2	3152.41	50-year	17.47	2.56	263.92	264.46	264.3	264.51	0.003526	0.95	2.84	7.9	0.47
2	3152.41	100-year	19.35	2.89	263.92	264.5	264.32	264.55	0.003298	0.97	3.16	8.19	0.46
2	3152.41	Regional	43.32	7.76	263.92	264.96	264.58	265.02	0.002068	1.22	7.64	12.06	0.41
2	3133.99	2-year	1.77	0.17	263.64	263.83	263.77	263.84	0.00619	0.56	0.31	2.41	0.5
2	3133.99	5-year	2.85	0.3	263.64	263.87	263.82	263.9	0.007748	0.72	0.41	2.6	0.58
2	3133.99	10-year	13.05	1.79	263.64	264.08	264.08	264.23	0.018633	1.7	1.05	3.51	0.99
2	3133.99	25-year	15.56	2.23	263.64	264.13	264.13	264.3	0.018674	1.82	1.23	3.68	1.01
2	3133.99	50-year	17.43	2.56	263.64	264.16	264.16	264.34	0.018161	1.88	1.36	3.81	1
2	3133.99	100-year	19.31	2.89	263.64	264.2	264.2	264.39	0.017804	1.93	1.5	3.92	1
2	3133.99	Regional	43.23	7.76	263.64	264.56	264.56	264.87	0.014918	2.47	3.15	5.27	0.99
2	3129.04	2-year	1.77	0.19	263.67	263.81	263.75	263.81	0.004578	0.43	0.43	4.14	0.42
2	3129.04	5-year	2.85	0.32	263.67	263.85	263.79	263.86	0.004895	0.53	0.61	4.38	0.46
2	3129.04	10-year	13.04	1.91	263.67	264.07	263.98	264.13	0.006933	1.14	1.71	5.54	0.63
2	3129.04	25-year	15.55	2.39	263.67	264.11	264.02	264.19	0.007285	1.26	1.94	5.74	0.65
2	3129.04	50-year	17.42	2.75	263.67	264.13	264.04	264.23	0.007719	1.36	2.09	5.86	0.68
2	3129.04	100-year	19.3	3.11	263.67	264.15	264.08	264.26	0.008408	1.46	2.21	5.95	0.72
2	3129.04	Regional	43.21	8.44	263.67	264.4	264.4	264.69	0.012477	2.42	3.82	7.04	0.94
2	3111.39	2-year	1.76	0.19	263.6	263.74	263.67	263.74	0.004096	0.34	0.54	6.55	0.38
2	3111.39	5-year	2.84	0.32	263.6	263.79	263.71	263.8	0.002604	0.36	0.89	7.12	0.33
2	3111.39	10-year	13	1.91	263.6	264.01	263.86	264.04	0.002991	0.77	2.61	8.52	0.42
2	3111.39	25-year	15.51	2.39	263.6	264.05	263.89	264.08	0.003148	0.85	2.97	8.76	0.44
2	3111.39	50-year	17.37	2.75	263.6	264.07	263.91	264.11	0.003434	0.92	3.16	8.89	0.46
2	3111.39	100-year	19.26	3.11	263.6	264.08	263.94	264.13	0.004038	1.01	3.26	8.95	0.5
2	3111.39	Regional	43.14	8.44	263.6	264.19	264.18	264.42	0.013317	2.15	4.26	9.58	0.94
2	3061.7	2-year	1.73	0.19	263.25	263.54	263.45	263.55	0.003827	0.46	0.41	3.03	0.4
2	3061.7	5-year	2.8	0.32	263.25	263.58	263.5	263.6	0.00568	0.59	0.57	5.12	0.49
2	3061.7	10-year	12.87	1.91	263.25	263.69	263.69	263.74	0.015723	1.14	2.56	28.02	0.85
2	3061.7	25-year	15.35	2.39	263.25	263.71	263.71	263.76	0.016338	1.23	3	28.69	0.88
2	3061.7	50-year	17.2	2.75	263.25	263.72	263.72	263.78	0.016493	1.28	3.34	29.18	0.9
2	3061.7	100-year	19.06	3.11	263.25	263.74	263.73	263.79	0.013038	1.22	4.02	30.51	0.81
2	3061.7	Regional	42.33	8.44	263.25	264.25	263.85	264.26	0.000604	0.57	24.51	50.51	0.21

Reach	River Sta	Profile	Volume	Q Total	Min Ch El	W.S. Elev	Crit W.S.	E.G. Elev	E.G. Slope	Vel Chnl	Flow Area	Top Width	Froude # Chl
			(1000 m3)	(m3/s)	(m)	(m)	(m)	(m)	(m/m)	(m/s)	(m2)	(m)	
2	3022.08	2-year	1.72	0.22	262.99	263.15	263.15	263.19	0.029745	0.85	0.25	3.5	1.01
2	3022.08	5-year	2.78	0.38	262.99	263.21	263.18	263.24	0.014941	0.81	0.46	4.62	0.77
2	3022.08	10-year	12.75	2.21	262.99	263.56	263.38	263.57	0.001569	0.66	6.12	34.34	0.31
2	3022.08	25-year	15.2	2.76	262.99	263.63	263.43	263.64	0.00106	0.59	8.59	37.46	0.26
2	3022.08	50-year	17.03	3.18	262.99	263.67	263.46	263.68	0.000876	0.57	10.38	40.56	0.24
2	3022.08	100-year	18.86	3.61	262.99	263.72	263.48	263.72	0.000761	0.56	12.27	44.62	0.23
2	3022.08	Regional	41.5	9.71	262.99	264.24	263.64	264.25	0.000209	0.45	40.35	61.44	0.13
2	3011.93	2-year	1.71	0.22	262.85	263.13		263.13	0.000715	0.27	1.01	7.1	0.19
2	3011.93	5-year	2.77	0.38	262.85	263.19		263.2	0.000784	0.34	1.5	8.6	0.21
2	3011.93	10-year	12.62	2.21	262.85	263.55		263.55	0.000596	0.51	9.35	40.95	0.21
2	3011.93	25-year	15.01	2.76	262.85	263.62		263.62	0.000481	0.49	12.46	47.24	0.19
2	3011.93	50-year	16.8	3.18	262.85	263.67		263.67	0.000412	0.48	14.74	50.52	0.18
2	3011.93	100-year	18.58	3.61	262.85	263.71		263.71	0.000361	0.47	17.11	54.28	0.17
2	3011.93	Regional	40.47	9.71	262.85	264.24		264.25	0.000121	0.38	52.91	76.31	0.1
2	2934.09	2-year	1.65	0.22	262.84	263.02		263.03	0.004056	0.44	0.48	3.99	0.41
2	2934.09	5-year	2.68	0.38	262.84	263.07		263.08	0.004055	0.54	0.7	4.24	0.43
2	2934.09	10-year	12.17	2.21	262.84	263.4		263.45	0.003729	0.96	2.29	5.33	0.47
2	2934.09	25-year	14.43	2.76	262.84	263.47		263.53	0.003687	1.03	2.68	5.56	0.47
2	2934.09	50-year	16.11	3.18	262.84	263.52		263.58	0.003681	1.08	2.96	5.72	0.48
2	2934.09	100-year	17.79	3.61	262.84	263.57		263.63	0.003654	1.12	3.23	5.88	0.48
2	2934.09	Regional	38.21	9.71	262.84	264.07		264.18	0.002985	1.53	6.57	7.59	0.48
2	2912.72	2-year	1.65	0.22	262.6	262.78	262.78	262.83	0.03224	1.05	0.21	2.19	1.09
2	2912.72	5-year	2.67	0.38	262.6	262.83	262.83	262.9	0.024116	1.13	0.33	2.56	1
2	2912.72	10-year	12.13	2.21	262.6	263.1	263.1	263.26	0.017797	1.8	1.24	3.99	0.99
2	2912.72	25-year	14.38	2.76	262.6	263.16	263.16	263.34	0.016339	1.92	1.47	4.18	0.98
2	2912.72	50-year	16.06	3.18	262.6	263.19	263.19	263.4	0.015831	2	1.63	4.3	0.98
2	2912.72	100-year	17.74	3.61	262.6	263.23	263.23	263.45	0.015211	2.08	1.79	4.43	0.97
2	2912.72	Regional	38.1	9.71	262.6	263.64	263.64	264	0.011465	2.75	3.9	5.88	0.94
2	2855.23	2-year	1.63	0.22	262.13	262.33	262.25	262.33	0.003706	0.4	0.54	4.92	0.38
2	2855.23	5-year	2.64	0.38	262.13	262.37	262.3	262.38	0.004051	0.5	0.78	8.34	0.42
2	2855.23	10-year	12.03	2.21	262.13	262.53	262.48	262.56	0.005374	0.86	3.18	18.73	0.53
2	2855.23	25-year	14.27	2.76	262.13	262.55	262.49	262.59	0.005462	0.91	3.69	18.97	0.54
2	2855.23	50-year	15.94	3.18	262.13	262.57	262.51	262.61	0.005785	0.97	3.98	19.11	0.56
2	2855.23	100-year	17.6	3.61	262.13	262.59	262.53	262.63	0.005645	0.99	4.35	19.24	0.56
2	2855.23	Regional	37.84	9.71	262.13	262.78	262.67	262.86	0.005625	1.36	8.12	20.2	0.61
2	2813.79	2-year	1.61	0.22	261.77	261.88	261.88	261.91	0.076361	0.73	0.3	6.33	1.07
2	2813.79	5-year	2.61	0.38	261.77	261.91	261.91	261.94	0.066298	0.82	0.46	7.34	1.05
2	2813.79	10-year	11.92	2.21	261.77	262.05	262.05	262.11	0.030102	1.17	2.2	17.42	0.86
2	2813.79	25-year	14.14	2.76	261.77	262.07	262.07	262.14	0.029742	1.24	2.62	18.75	0.88
2	2813.79	50-year	15.79	3.18	261.77	262.1	262.1	262.16	0.026568	1.23	3.02	19.3	0.85
2	2813.79	100-year	17.45	3.61	261.77	262.1	262.1	262.18	0.030862	1.34	3.13	19.36	0.92
2	2813.79	Regional	37.56	9.71	261.77	262.24	262.24	262.39	0.032314	1.83	5.94	20.7	0.99
2	2764.7	2-year	1.57	0.22	261.54	261.55		261.55	0.002048	0.03	1.11	20.95	0.16
2	2764.7	5-year	2.55	0.38	261.54	261.58		261.58	0.001488	0.08	1.9	29.56	0.18
2	2764.7	10-year	11.71	2.21	261.54	261.71		261.71	0.001498	0.29	6.17	35.48	0.25
2	2764.7	25-year	13.9	2.76	261.54	261.73		261.74	0.00159	0.33	6.98	35.96	0.27
2	2764.7	50-year	15.53	3.18	261.54	261.75		261.76	0.00151	0.35	7.76	36.21	0.27
2	2764.7	100-year	17.17	3.61	261.54	261.77		261.78	0.001562	0.38	8.32	36.4	0.27
2	2764.7	Regional	37.05	9.71	261.54	261.94		261.96	0.001905	0.64	14.58	37.86	0.34
2	2721.34	2-year	1.55	0.22	261.16	261.35	261.35	261.39	0.020298	0.89	0.25	2.43	0.88
2	2721.34	5-year	2.52	0.39	261.16	261.39	261.39	261.45	0.025142	1.08	0.36	3.03	1.01
2	2721.34	10-year	11.56	2.27	261.16	261.55	261.55	261.59	0.016883	1.12	3.14	30.32	0.88
2	2721.34	25-year	13.73	2.84	261.16	261.56	261.56	261.61	0.02122	1.23	3.46	31.05	0.98
2	2721.34	50-year	15.34	3.28	261.16	261.57	261.57	261.63	0.025547	1.37	3.58	31.18	1.07
2	2721.34	100-year	16.97	3.73	261.16	261.58	261.58	261.64	0.02468	1.38	3.97	31.67	1.06
2	2721.34	Regional	36.69	10.12	261.16	261.69	261.69	261.79	0.025583	1.8	7.7	35.54	1.15

Reach	River Sta	Profile	Volume	Q Total	Min Ch El	W.S. Elev	Crit W.S.	E.G. Elev	E.G. Slope	Vel Chnl	Flow Area	Top Width	Froude # Chl
			(1000 m3)	(m3/s)	(m)	(m)	(m)	(m)	(m/m)	(m/s)	(m2)	(m)	
2	2678.01	2-year	1.52	0.22	260.42	260.77		260.77	0.000829	0.2	1.09	9.01	0.19
2	2678.01	5-year	2.48	0.39	260.42	260.81		260.82	0.000912	0.26	1.52	9.62	0.2
2	2678.01	10-year	11.42	2.27	260.42	261.03		261.05	0.001625	0.56	4.4	19.55	0.31
2	2678.01	25-year	13.57	2.84	260.42	261.07		261.09	0.001721	0.61	5.25	24.73	0.32
2	2678.01	50-year	15.17	3.28	260.42	261.09		261.12	0.001834	0.65	5.88	26.7	0.33
2	2678.01	100-year	16.78	3.73	260.42	261.12		261.14	0.001867	0.68	6.58	29.91	0.34
2	2678.01	Regional	36.37	10.12	260.42	261.34		261.38	0.002374	0.99	14.34	39.62	0.4
2	2644.21	2-year	1.5	0.22	260.5	260.67	260.65	260.69	0.015505	0.62	0.36	4.88	0.73
2	2644.21	5-year	2.44	0.39	260.5	260.72	260.68	260.74	0.011704	0.58	0.67	8.07	0.65
2	2644.21	10-year	11.3	2.27	260.5	260.86	260.84	260.91	0.015045	1.05	2.31	18.13	0.83
2	2644.21	25-year	13.43	2.84	260.5	260.88	260.86	260.94	0.015953	1.16	2.66	19.02	0.87
2	2644.21	50-year	15.02	3.28	260.5	260.89	260.89	260.96	0.016263	1.23	2.94	19.94	0.89
2	2644.21	100-year	16.61	3.73	260.5	260.9	260.9	260.98	0.016279	1.29	3.23	21.5	0.9
2	2644.21	Regional	35.98	10.12	260.5	261.06	261.06	261.19	0.013671	1.72	7.42	28.77	0.9
2	2614.5	2-year	1.49	0.22	260.11	260.28	260.26	260.3	0.011706	0.61	0.36	4.15	0.66
2	2614.5	5-year	2.42	0.39	260.11	260.32	260.29	260.34	0.014862	0.75	0.52	5.21	0.76
2	2614.5	10-year	11.22	2.27	260.11	260.5	260.48	260.56	0.009506	1.13	2.7	20.76	0.71
2	2614.5	25-year	13.34	2.84	260.11	260.54	260.51	260.59	0.008691	1.17	3.41	22.09	0.69
2	2614.5	50-year	14.91	3.28	260.11	260.56	260.54	260.62	0.007961	1.18	4	24.34	0.67
2	2614.5	100-year	16.49	3.73	260.11	260.58	260.55	260.64	0.007508	1.2	4.57	26.09	0.66
2	2614.5	Regional	35.63	10.12	260.11	260.85	260.72	260.9	0.003687	1.24	13.71	39.83	0.5
2	2564.81	2-year	1.47	0.22	259.73	259.94	259.87	259.95	0.004534	0.43	0.52	4.96	0.42
2	2564.81	5-year	2.39	0.39	259.73	260	259.92	260.01	0.003674	0.47	0.83	5.95	0.4
2	2564.81	10-year	11.08	2.27	259.73	260.23	260.11	260.26	0.00408	0.86	3.03	15.37	0.48
2	2564.81	25-year	13.17	2.84	259.73	260.26	260.16	260.31	0.004176	0.93	3.63	16.16	0.5
2	2564.81	50-year	14.71	3.28	259.73	260.29	260.18	260.33	0.004377	0.99	4	16.78	0.51
2	2564.81	100-year	16.27	3.73	259.73	260.31	260.2	260.36	0.004579	1.05	4.35	17.91	0.53
2	2564.81	Regional	35.1	10.12	259.73	260.45	260.45	260.6	0.009459	1.86	7.74	29.24	0.8
2	2515.12	2-year	1.44	0.22	259.48	259.64	259.61	259.65	0.008123	0.53	0.49	7.41	0.55
2	2515.12	5-year	2.35	0.39	259.48	259.65	259.64	259.68	0.015827	0.79	0.59	8.15	0.78
2	2515.12	10-year	10.96	2.27	259.48	259.78	259.78	259.84	0.025541	1.27	2.07	15.2	1.05
2	2515.12	25-year	13.02	2.84	259.48	259.8	259.8	259.88	0.026384	1.4	2.37	16.03	1.09
2	2515.12	50-year	14.55	3.28	259.48	259.82	259.82	259.9	0.022664	1.41	2.76	16.99	1.03
2	2515.12	100-year	16.09	3.73	259.48	259.84	259.84	259.92	0.021697	1.46	3.06	17.66	1.02
2	2515.12	Regional	34.53	10.12	259.48	260.25	260.02	260.28	0.002575	1.03	14.67	35.69	0.42
2	2493	2-year	1.43	0.22	259.12	259.27	259.26	259.29	0.015882	0.65	0.34	4.4	0.75
2	2493	5-year	2.33	0.39	259.12	259.34	259.29	259.35	0.007015	0.53	0.74	7.13	0.52
2	2493	10-year	10.83	2.27	259.12	259.64	259.45	259.65	0.001231	0.49	5.89	26.09	0.27
2	2493	25-year	12.86	2.84	259.12	259.69	259.49	259.7	0.001108	0.51	7.27	27.84	0.26
2	2493	50-year	14.37	3.28	259.12	259.73	259.51	259.74	0.001027	0.52	8.29	28.38	0.25
2	2493	100-year	15.88	3.73	259.12	259.77	259.53	259.78	0.000924	0.53	9.46	29.37	0.24
2	2493	Regional	33.81	10.12	259.12	260.24	259.7	260.25	0.000388	0.54	28.85	49.04	0.18
2	2474	2-year	1.42	0.22	258.85	259.22	259.05	259.23	0.001193	0.35	0.66	3.84	0.24
2	2474	5-year	2.32	0.39	258.85	259.29	259.11	259.3	0.001402	0.46	0.96	4.89	0.27
2	2474	10-year	10.71	2.27	258.85	259.6	259.44	259.62	0.001463	0.76	6.16	32.25	0.31
2	2474	25-year	12.71	2.84	258.85	259.66	259.49	259.68	0.001214	0.74	8.11	35.01	0.29
2	2474	50-year	14.19	3.28	258.85	259.7	259.52	259.72	0.001061	0.72	9.56	35.84	0.27
2	2474	100-year	15.68	3.73	258.85	259.75	259.52	259.76	0.000897	0.69	11.2	36.53	0.26
2	2474	Regional	33.19	10.12	258.85	260.23	259.72	260.24	0.00032	0.58	34.26	53.78	0.17
2	2429	2-year	1.4	0.22	258.92	259.07	259.07	259.11	0.024024	0.87	0.26	2.91	0.94
2	2429	5-year	2.29	0.39	258.92	259.11	259.11	259.16	0.023012	1.02	0.38	3.31	0.96
2	2429	10-year	10.54	2.27	258.92	259.4	259.34	259.5	0.009668	1.41	1.7	5.77	0.75
2	2429	25-year	12.49	2.84	258.92	259.47	259.39	259.57	0.008068	1.45	2.13	6.21	0.7
2	2429	50-year	13.93	3.28	258.92	259.52	259.43	259.62	0.007317	1.48	2.44	6.41	0.68
2	2429	100-year	15.38	3.73	258.92	259.56	259.46	259.67	0.006778	1.52	2.74	6.61	0.67
2	2429	Regional	32.33	10.12	258.92	260.04	259.8	260.19	0.004504	1.9	7.26	17.63	0.6

Reach	River Sta	Profile	Volume	Q Total	Min Ch El	W.S. Elev	Crit W.S.	E.G. Elev	E.G. Slope	Vel Chnl	Flow Area	Top Width	Froude # Chl
			(1000 m3)	(m3/s)	(m)	(m)	(m)	(m)	(m/m)	(m/s)	(m2)	(m)	
2	2380	2-year	1.38	0.22	258.52	258.84	258.67	258.84	0.000843	0.28	0.79	3.98	0.2
2	2380	5-year	2.26	0.39	258.52	258.91	258.72	258.92	0.001046	0.35	1.11	4.48	0.22
2	2380	10-year	10.43	2.27	258.52	259.28	258.97	259.31	0.001656	0.79	3.11	6.1	0.32
2	2380	25-year	12.35	2.84	258.52	259.35	259.02	259.39	0.001791	0.89	3.54	6.39	0.34
2	2380	50-year	13.78	3.28	258.52	259.4	259.05	259.44	0.001878	0.95	3.85	6.59	0.35
2	2380	100-year	15.21	3.73	258.52	259.45	259.09	259.5	0.001959	1.01	4.16	6.79	0.36
2	2380	Regional	31.97	10.12	258.52	259.89	259.46	260.01	0.002817	1.63	7.67	9.66	0.47
2	2364.8	2-year	1.36	0.22	258.55	258.82	258.68	258.83	0.001042	0.31	0.73	3.88	0.22
2	2364.8	5-year	2.24	0.39	258.55	258.89	258.73	258.9	0.001164	0.39	1.01	4.2	0.24
2	2364.8	10-year	10.38	2.27	258.55	259.25	258.97	259.29	0.001767	0.85	2.81	5.79	0.35
2	2364.8	25-year	12.3	2.84	258.55	259.32	259.02	259.36	0.001863	0.94	3.2	6.07	0.36
2	2364.8	50-year	13.73	3.28	258.55	259.37	259.06	259.41	0.001919	0.99	3.49	6.29	0.37
2	2364.8	100-year	15.15	3.73	258.55	259.41	259.1	259.46	0.001964	1.04	3.77	6.5	0.38
2	2364.8	Regional	31.85	10.12	258.55	259.85	259.47	259.97	0.002138	1.47	7.14	9.5	0.43
2	2314	2-year	1.33	0.22	258.53	258.75	258.65	258.76	0.002005	0.38	0.59	3.59	0.3
2	2314	5-year	2.19	0.39	258.53	258.81	258.69	258.82	0.002385	0.48	0.8	3.83	0.34
2	2314	10-year	10.26	2.27	258.53	259.07	258.94	259.14	0.005124	1.2	2	5.6	0.56
2	2314	25-year	12.16	2.84	258.53	259.11	258.99	259.2	0.006055	1.37	2.22	5.79	0.62
2	2314	50-year	13.58	3.28	258.53	259.12	259.03	259.24	0.007528	1.55	2.27	5.82	0.69
2	2314	100-year	14.99	3.73	258.53	259.15	259.07	259.28	0.007822	1.64	2.45	5.94	0.71
2	2314	Regional	31.56	10.12	258.53	259.44	259.44	259.75	0.010723	2.57	4.37	7.1	0.9
2	2264.17	2-year	1.29	0.22	258.46	258.51	258.5	258.52	0.013919	0.26	0.84	26.51	0.57
2	2264.17	5-year	2.14	0.39	258.46	258.52	258.51	258.53	0.021024	0.4	1.15	32.18	0.74
2	2264.17	10-year	10.06	2.27	258.46	258.59	258.57	258.61	0.019207	0.63	4.36	59.66	0.8
2	2264.17	25-year	11.93	2.84	258.46	258.61	258.58	258.62	0.017055	0.68	5.25	61.39	0.78
2	2264.17	50-year	13.31	3.28	258.46	258.62	258.59	258.64	0.01317	0.68	6.31	62.84	0.71
2	2264.17	100-year	14.7	3.73	258.46	258.63	258.59	258.65	0.013875	0.73	6.74	63.38	0.73
2	2264.17	Regional	30.93	10.12	258.46	258.76	258.67	258.78	0.007256	0.92	15.43	69.36	0.61
2	2213.86	2-year	1.24	0.22	258.06	258.17	258.14	258.17	0.003825	0.23	1.28	29.74	0.34
2	2213.86	5-year	2.06	0.39	258.06	258.19	258.15	258.19	0.003262	0.25	2.03	35.31	0.33
2	2213.86	10-year	9.78	2.27	258.06	258.31	258.21	258.31	0.002804	0.46	6.83	43.72	0.36
2	2213.86	25-year	11.6	2.84	258.06	258.33	258.22	258.34	0.002826	0.5	7.86	44.57	0.37
2	2213.86	50-year	12.93	3.28	258.06	258.34	258.23	258.35	0.002913	0.53	8.55	45.59	0.38
2	2213.86	100-year	14.3	3.73	258.06	258.36	258.24	258.37	0.002912	0.56	9.31	46.45	0.38
2	2213.86	Regional	30.08	10.12	258.06	258.53	258.33	258.55	0.003347	0.87	17.8	58.44	0.45
2	2163.54	2-year	1.19	0.22	257.79	257.91	257.87	257.92	0.006719	0.43	0.51	6.49	0.49
2	2163.54	5-year	1.99	0.39	257.79	257.94	257.9	257.95	0.007875	0.5	0.79	9.81	0.54
2	2163.54	10-year	9.52	2.27	257.79	258.06	258.03	258.09	0.008567	0.86	3.74	35	0.64
2	2163.54	25-year	11.29	2.84	257.79	258.08	258.05	258.11	0.00879	0.93	4.39	35.6	0.66
2	2163.54	50-year	12.6	3.28	257.79	258.09	258.06	258.13	0.008621	0.96	4.91	36.12	0.66
2	2163.54	100-year	13.93	3.73	257.79	258.11	258.07	258.14	0.008547	0.99	5.41	36.71	0.66
2	2163.54	Regional	29.34	10.12	257.79	258.28	258.19	258.32	0.006076	1.2	12.23	43.35	0.61
2	2113	2-year	1.16	0.22	257.5	257.68	257.65	257.69	0.003672	0.42	0.81	14.17	0.38
2	2113	5-year	1.94	0.39	257.5	257.72	257.68	257.73	0.003139	0.43	1.45	20.35	0.37
2	2113	10-year	9.27	2.27	257.5	257.83	257.78	257.84	0.003242	0.62	6.06	46.82	0.41
2	2113	25-year	11.01	2.84	257.5	257.85	257.79	257.86	0.003119	0.64	7.1	47.47	0.4
2	2113	50-year	12.28	3.28	257.5	257.86	257.79	257.88	0.003151	0.67	7.75	47.87	0.41
2	2113	100-year	13.58	3.73	257.5	257.88	257.8	257.89	0.003154	0.69	8.42	48.28	0.41
2	2113	Regional	28.7	10.12	257.5	257.97	257.88	258.01	0.005757	1.13	13.09	50.57	0.58
2	2063	2-year	1.13	0.22	257.23	257.36	257.34	257.37	0.012126	0.52	0.53	8.77	0.64
2	2063	5-year	1.88	0.39	257.23	257.39	257.36	257.4	0.017396	0.7	0.77	13.77	0.79
2	2063	10-year	9.02	2.27	257.23	257.48	257.48	257.51	0.016361	1.12	3.91	51.36	0.87
2	2063	25-year	10.72	2.84	257.23	257.49	257.49	257.53	0.019774	1.27	4.33	52.36	0.96
2	2063	50-year	11.97	3.28	257.23	257.5	257.5	257.54	0.020504	1.33	4.75	53.04	0.98
2	2063	100-year	13.24	3.73	257.23	257.51	257.51	257.55	0.021392	1.39	5.14	53.84	1.01
2	2063	Regional	27.99	10.12	257.23	257.68	257.59	257.71	0.006567	1.17	14.94	61.85	0.62

Reach	River Sta	Profile	Volume	Q Total	Min Ch El	W.S. Elev	Crit W.S.	E.G. Elev	E.G. Slope	Vel Chnl	Flow Area	Top Width	Froude # Chl
			(1000 m3)	(m3/s)	(m)	(m)	(m)	(m)	(m/m)	(m/s)	(m2)	(m)	
2	2027	2-year	1.11	0.25	256.94	257.17	257.08	257.18	0.003293	0.4	0.75	11.32	0.37
2	2027	5-year	1.84	0.43	256.94	257.22	257.15	257.23	0.002376	0.37	1.81	33.08	0.32
2	2027	10-year	8.73	2.53	256.94	257.38	257.28	257.38	0.001014	0.39	12.55	85.79	0.24
2	2027	25-year	10.37	3.16	256.94	257.41	257.29	257.41	0.000957	0.4	14.91	88.86	0.23
2	2027	50-year	11.58	3.64	256.94	257.43	257.3	257.43	0.000948	0.41	16.52	92.83	0.23
2	2027	100-year	12.82	4.13	256.94	257.44	257.31	257.45	0.00093	0.42	18.18	98.94	0.23
2	2027	Regional	26.98	11.29	256.94	257.64	257.39	257.64	0.000707	0.49	41.48	131.37	0.21
2	2010	2-year	1.09	0.25	256.89	257.11	257.03	257.12	0.003436	0.44	0.58	6.17	0.38
2	2010	5-year	1.81	0.43	256.89	257.17	257.07	257.18	0.003227	0.42	1.4	20.98	0.37
2	2010	10-year	8.51	2.53	256.89	257.36	257.24	257.37	0.000998	0.36	12.49	90.54	0.23
2	2010	25-year	10.12	3.16	256.89	257.39	257.26	257.4	0.000953	0.38	15.11	96.06	0.23
2	2010	50-year	11.3	3.64	256.89	257.41	257.27	257.41	0.000909	0.39	16.88	97.74	0.22
2	2010	100-year	12.51	4.13	256.89	257.43	257.28	257.43	0.000877	0.39	18.65	100.14	0.22
2	2010	Regional	26.27	11.29	256.89	257.63	257.37	257.63	0.000674	0.48	40.87	121.06	0.21
2	1979	2-year	1.08	0.25	256.79	257.01	256.94	257.02	0.003522	0.46	0.57	6	0.39
2	1979	5-year	1.77	0.43	256.79	257.07	256.98	257.09	0.002614	0.51	1.03	8.23	0.36
2	1979	10-year	8.22	2.53	256.79	257.29	257.22	257.31	0.002748	0.85	6.14	40.93	0.41
2	1979	25-year	9.77	3.16	256.79	257.32	257.24	257.34	0.002761	0.89	7.39	42.64	0.42
2	1979	50-year	10.91	3.64	256.79	257.34	257.25	257.36	0.002727	0.91	8.27	43.29	0.42
2	1979	100-year	12.08	4.13	256.79	257.36	257.28	257.38	0.002746	0.93	9.05	43.83	0.42
2	1979	Regional	25.35	11.29	256.79	257.56	257.41	257.59	0.002802	1.18	18.27	49.27	0.45
2	1959	2-year	1.06	0.25	256.68	256.97		256.98	0.001282	0.34	0.73	3.82	0.25
2	1959	5-year	1.75	0.43	256.68	257.04		257.05	0.001479	0.44	1.03	7.9	0.28
2	1959	10-year	8.11	2.53	256.68	257.22		257.25	0.003229	0.93	5.37	38.09	0.45
2	1959	25-year	9.63	3.16	256.68	257.25		257.28	0.00335	0.99	6.45	40.21	0.46
2	1959	50-year	10.75	3.64	256.68	257.27		257.3	0.003329	1.01	7.31	40.96	0.46
2	1959	100-year	11.91	4.13	256.68	257.29		257.32	0.003336	1.04	8.06	41.28	0.47
2	1959	Regional	25.01	11.29	256.68	257.49		257.52	0.003474	1.32	16.9	49.04	0.5
2	1911.97	2-year	1.04	0.25	256.62	256.8	256.79	256.82	0.018732	0.72	0.44	8.32	0.81
2	1911.97	5-year	1.71	0.43	256.62	256.82	256.81	256.85	0.025291	0.92	0.67	13.37	0.98
2	1911.97	10-year	7.9	2.53	256.62	256.95	256.93	256.99	0.013073	1.09	3.63	27.2	0.78
2	1911.97	25-year	9.39	3.16	256.62	256.98	256.95	257.02	0.013017	1.17	4.31	29.44	0.8
2	1911.97	50-year	10.48	3.64	256.62	256.99	256.96	257.03	0.013428	1.23	4.68	29.64	0.82
2	1911.97	100-year	11.61	4.13	256.62	257	256.96	257.05	0.013063	1.26	5.12	29.87	0.81
2	1911.97	Regional	24.39	11.29	256.62	257.17		257.24	0.012465	1.71	10.32	35.2	0.86
2	1861.65	2-year	0.99	0.25	256.27	256.36		256.36	0.004378	0.3	1.05	16.43	0.38
2	1861.65	5-year	1.64	0.43	256.27	256.39		256.39	0.003854	0.35	1.67	21.55	0.38
2	1861.65	10-year	7.64	2.53	256.27	256.51		256.53	0.005299	0.71	5.53	35.05	0.51
2	1861.65	25-year	9.08	3.16	256.27	256.54		256.56	0.005077	0.75	6.46	35.66	0.5
2	1861.65	50-year	10.15	3.64	256.27	256.56		256.57	0.00512	0.79	7.06	36.04	0.51
2	1861.65	100-year	11.24	4.13	256.27	256.57		256.59	0.005122	0.83	7.68	36.86	0.52
2	1861.65	Regional	23.66	11.29	256.27	256.76		256.8	0.004851	1.16	15.3	43.67	0.55
2	1811.34	2-year	0.96	0.25	256.05	256.17		256.18	0.005517	0.35	0.92	17.19	0.43
2	1811.34	5-year	1.58	0.43	256.05	256.2		256.21	0.005199	0.43	1.5	24.54	0.44
2	1811.34	10-year	7.39	2.53	256.05	256.35		256.36	0.003201	0.63	6.61	39.64	0.41
2	1811.34	25-year	8.79	3.16	256.05	256.37		256.39	0.003343	0.69	7.63	41.85	0.42
2	1811.34	50-year	9.82	3.64	256.05	256.4		256.41	0.003153	0.7	8.56	42.71	0.42
2	1811.34	100-year	10.89	4.13	256.05	256.42		256.43	0.003066	0.72	9.39	43.46	0.41
2	1811.34	Regional	22.94	11.29	256.05	256.61		256.63	0.003057	1	18.8	52.96	0.45
2	1761.02	2-year	0.9	0.25	255.86	256.01	255.97	256.02	0.00207	0.29	1.2	20.58	0.28
2	1761.02	5-year	1.5	0.43	255.86	256.04	255.99	256.05	0.002048	0.34	1.89	25.07	0.29
2	1761.02	10-year	7.06	2.53	255.86	256.2	256.09	256.21	0.002547	0.62	6.63	37.06	0.37
2	1761.02	25-year	8.4	3.16	255.86	256.23	256.11	256.24	0.002599	0.68	7.8	39.56	0.38
2	1761.02	50-year	9.39	3.64	255.86	256.25	256.12	256.26	0.002736	0.72	8.66	43.21	0.4
2	1761.02	100-year	10.41	4.13	255.86	256.27	256.14	256.28	0.002815	0.76	9.48	45.58	0.41
2	1761.02	Regional	22.01	11.29	255.86	256.44	256.28	256.46	0.003585	1.11	18.2	58.63	0.49

Reach	River Sta	Profile	Volume	Q Total	Min Ch El	W.S. Elev	Crit W.S.	E.G. Elev	E.G. Slope	Vel Chnl	Flow Area	Top Width	Froude # Chl
			(1000 m3)	(m3/s)	(m)	(m)	(m)	(m)	(m/m)	(m/s)	(m2)	(m)	
2	1710.71	2-year	0.85	0.25	255.72	255.86		255.87	0.004858	0.39	0.9	16.61	0.42
2	1710.71	5-year	1.41	0.43	255.72	255.89		255.9	0.004918	0.47	1.49	26.43	0.45
2	1710.71	10-year	6.72	2.53	255.72	256.02		256.04	0.004389	0.75	5.93	43.7	0.48
2	1710.71	25-year	8	3.16	255.72	256.05		256.06	0.004285	0.79	7.19	52.16	0.48
2	1710.71	50-year	8.94	3.64	255.72	256.06		256.08	0.004293	0.82	8.02	56.02	0.49
2	1710.71	100-year	9.92	4.13	255.72	256.08		256.09	0.004319	0.85	8.86	60.26	0.49
2	1710.71	Regional	21.02	11.29	255.72	256.22		256.25	0.00465	1.14	19	78.71	0.54
2	1660.39	2-year	0.79	0.25	255.63	255.67		255.68	0.003426	0.15	1.4	28.65	0.29
2	1660.39	5-year	1.32	0.43	255.63	255.69		255.7	0.003721	0.19	2.04	35.77	0.32
2	1660.39	10-year	6.43	2.53	255.63	255.79		255.8	0.005537	0.54	6.03	48.68	0.48
2	1660.39	25-year	7.65	3.16	255.63	255.8		255.82	0.005712	0.6	6.95	50.47	0.5
2	1660.39	50-year	8.55	3.64	255.63	255.82		255.83	0.005641	0.64	7.77	51.86	0.51
2	1660.39	100-year	9.49	4.13	255.63	255.83		255.85	0.005498	0.67	8.5	52.27	0.51
2	1660.39	Regional	20.12	11.29	255.63	255.99		256.02	0.004923	0.96	17.4	62.09	0.53
2	1610.08	2-year	0.72	0.25	255.38	255.44		255.44	0.006351	0.19	1.23	30.61	0.39
2	1610.08	5-year	1.22	0.45	255.38	255.46		255.47	0.005136	0.2	2.04	37.73	0.36
2	1610.08	10-year	6.07	2.61	255.38	255.58		255.59	0.003248	0.43	8	57.7	0.37
2	1610.08	25-year	7.23	3.27	255.38	255.61		255.61	0.002983	0.47	9.49	58.85	0.37
2	1610.08	50-year	8.08	3.77	255.38	255.62		255.63	0.002914	0.49	10.47	60.04	0.37
2	1610.08	100-year	8.99	4.29	255.38	255.64		255.65	0.002998	0.52	11.26	60.81	0.38
2	1610.08	Regional	19.08	12	255.38	255.82		255.84	0.002456	0.74	23.12	65.93	0.38
2	1559	2-year	0.68	0.25	255.06	255.24	255.19	255.25	0.003392	0.33	0.98	17.62	0.35
2	1559	5-year	1.14	0.45	255.06	255.27	255.23	255.27	0.004046	0.42	1.43	19.96	0.4
2	1559	10-year	5.78	2.61	255.06	255.41		255.43	0.00409	0.74	5.49	39.64	0.46
2	1559	25-year	6.88	3.27	255.06	255.45		255.47	0.003909	0.78	6.89	41.68	0.46
2	1559	50-year	7.7	3.77	255.06	255.46		255.48	0.00393	0.81	7.61	42.54	0.47
2	1559	100-year	8.57	4.29	255.06	255.48		255.5	0.003976	0.85	8.33	43.1	0.48
2	1559	Regional	18.23	12	255.06	255.67		255.7	0.004123	1.17	17	52.07	0.52
2	1509	2-year	0.64	0.25	254.93	254.99	254.96	254.99	0.010874	0.28	0.78	13.58	0.53
2	1509	5-year	1.08	0.45	254.93	255.02	254.98	255.03	0.007222	0.34	1.31	17.9	0.47
2	1509	10-year	5.54	2.61	254.93	255.16	255.09	255.17	0.00817	0.71	4.69	33.28	0.6
2	1509	25-year	6.59	3.27	254.93	255.18	255.1	255.2	0.008922	0.83	5.67	38.63	0.64
2	1509	50-year	7.38	3.77	254.93	255.2	255.11	255.22	0.009247	0.89	6.16	39.29	0.66
2	1509	100-year	8.22	4.29	254.93	255.21	255.12	255.23	0.009306	0.94	6.69	40	0.67
2	1509	Regional	17.55	12	254.93	255.34	255.26	255.39	0.012166	1.49	12.11	44.81	0.83
2	1459	2-year	0.61	0.25	254.55	254.72		254.73	0.005053	0.53	0.58	10.92	0.46
2	1459	5-year	1.04	0.45	254.55	254.75	254.71	254.77	0.006404	0.68	1.02	19.57	0.54
2	1459	10-year	5.35	2.61	254.55	254.88		254.9	0.006064	0.98	5.44	47.66	0.58
2	1459	25-year	6.36	3.27	254.55	254.9		254.92	0.00604	1.03	6.52	50.43	0.58
2	1459	50-year	7.13	3.77	254.55	254.92		254.94	0.005991	1.06	7.32	53.06	0.59
2	1459	100-year	7.96	4.29	254.55	254.93		254.96	0.006111	1.1	8.07	54.42	0.6
2	1459	Regional	17.02	12	254.55	255.11		255.14	0.004507	1.24	18.2	59.27	0.55
2	1408.82	2-year	0.58	0.25	254.26	254.38		254.39	0.0097	0.53	0.55	7.59	0.59
2	1408.82	5-year	0.98	0.45	254.26	254.43		254.44	0.006548	0.54	1.07	13.53	0.51
2	1408.82	10-year	5.08	2.61	254.26	254.58		254.6	0.005883	0.87	5.32	38.74	0.55
2	1408.82	25-year	6.03	3.27	254.26	254.61		254.63	0.005773	0.92	6.28	39.82	0.56
2	1408.82	50-year	6.76	3.77	254.26	254.62		254.65	0.005655	0.95	6.98	40.59	0.56
2	1408.82	100-year	7.55	4.29	254.26	254.64		254.67	0.00551	0.97	7.68	41.02	0.56
2	1408.82	Regional	16.2	12	254.26	254.77		254.83	0.008182	1.5	13.25	43.24	0.72
2	1358.5	2-year	0.56	0.25	253.8	254.02		254.03	0.006141	0.55	0.45	3.65	0.5
2	1358.5	5-year	0.94	0.45	253.8	254.06		254.08	0.008146	0.72	0.62	4.43	0.6
2	1358.5	10-year	4.87	2.61	253.8	254.21	254.21	254.26	0.009996	1.25	3.92	35.54	0.74
2	1358.5	25-year	5.79	3.27	253.8	254.23	254.23	254.28	0.009887	1.3	4.71	35.88	0.74
2	1358.5	50-year	6.5	3.77	253.8	254.24	254.24	254.3	0.011462	1.42	4.96	36.01	0.8
2	1358.5	100-year	7.26	4.29	253.8	254.25	254.25	254.31	0.011603	1.47	5.45	36.36	0.81
2	1358.5	Regional	15.61	12	253.8	254.46		254.51	0.006451	1.51	14.37	45.74	0.66

Reach	River Sta	Profile	Volume	Q Total	Min Ch El	W.S. Elev	Crit W.S.	E.G. Elev	E.G. Slope	Vel Chnl	Flow Area	Top Width	Froude # Chl
			(1000 m3)	(m3/s)	(m)	(m)	(m)	(m)	(m/m)	(m/s)	(m2)	(m)	
2	1308.19	2-year	0.54	0.25	253.56	253.76		253.77	0.004659	0.47	0.54	4.73	0.43
2	1308.19	5-year	0.9	0.45	253.56	253.82		253.83	0.003334	0.47	1.11	12.75	0.38
2	1308.19	10-year	4.54	2.61	253.56	254.03		254.04	0.001317	0.53	8.76	44.27	0.28
2	1308.19	25-year	5.4	3.27	253.56	254.07		254.08	0.001255	0.55	10.41	45.24	0.28
2	1308.19	50-year	6.08	3.77	253.56	254.09		254.1	0.001275	0.57	11.42	45.81	0.28
2	1308.19	100-year	6.79	4.29	253.56	254.12		254.12	0.001276	0.59	12.47	46.42	0.28
2	1308.19	Regional	14.63	12	253.56	254.34		254.35	0.001553	0.85	22.99	49.47	0.33
2	1257.87	2-year	0.5	0.47	253.18	253.47		253.49	0.0061	0.66	0.71	4.32	0.52
2	1257.87	5-year	0.84	0.83	253.18	253.54		253.57	0.006533	0.78	1.07	5.37	0.56
2	1257.87	10-year	4.05	4.42	253.18	253.74	253.74	253.82	0.009267	1.39	5.44	44.29	0.73
2	1257.87	25-year	4.79	5.61	253.18	253.77	253.76	253.85	0.0099	1.51	6.77	53.9	0.77
2	1257.87	50-year	5.36	6.48	253.18	253.8	253.8	253.87	0.00903	1.51	8.38	59.33	0.74
2	1257.87	100-year	6	7.37	253.18	253.82	253.82	253.89	0.008798	1.53	9.53	68.07	0.74
2	1257.87	Regional	13	20.72	253.18	253.96	253.96	254.05	0.010806	2.05	21.97	97.66	0.86
2	1207.56	2-year	0.47	0.47	252.71	252.94	252.94	252.99	0.018679	1.02	0.46	3.42	0.89
2	1207.56	5-year	0.79	0.83	252.71	253.01	252.98	253.07	0.01635	1.15	0.72	4.04	0.87
2	1207.56	10-year	3.73	4.42	252.71	253.34	253.34	253.39	0.005489	1.26	7.2	57.66	0.59
2	1207.56	25-year	4.42	5.61	252.71	253.35	253.35	253.42	0.007535	1.49	7.78	59.02	0.69
2	1207.56	50-year	4.94	6.48	252.71	253.36	253.36	253.44	0.00824	1.59	8.54	65.41	0.73
2	1207.56	100-year	5.5	7.37	252.71	253.39	253.39	253.46	0.007648	1.59	10.35	70.35	0.71
2	1207.56	Regional	11.81	20.72	252.71	253.58		253.64	0.006175	1.76	24.81	81.17	0.67
2	1157.24	2-year	0.45	0.47	252.16	252.45		252.48	0.005961	0.76	0.64	3.38	0.53
2	1157.24	5-year	0.75	0.83	252.16	252.52		252.56	0.00688	0.98	0.91	4.82	0.6
2	1157.24	10-year	3.42	4.42	252.16	252.79	252.78	252.9	0.009171	1.79	4.32	22.02	0.77
2	1157.24	25-year	4.07	5.61	252.16	252.84	252.84	252.96	0.008997	1.89	5.82	31.33	0.78
2	1157.24	50-year	4.54	6.48	252.16	252.9	252.9	252.99	0.006909	1.76	7.65	34.7	0.69
2	1157.24	100-year	5.02	7.37	252.16	252.93	252.93	253.02	0.006564	1.76	8.73	35.99	0.68
2	1157.24	Regional	10.75	20.72	252.16	253.14		253.27	0.009356	2.51	16.87	42.01	0.85
2	1107	2-year	0.4	0.47	252	252.27		252.28	0.002424	0.39	1.24	9.73	0.32
2	1107	5-year	0.69	0.83	252	252.32		252.33	0.002896	0.5	1.86	18.05	0.37
2	1107	10-year	3.14	4.42	252	252.5		252.54	0.004758	1.01	6.17	29.99	0.53
2	1107	25-year	3.72	5.61	252	252.55		252.59	0.004664	1.07	7.58	34.29	0.53
2	1107	50-year	4.1	6.48	252	252.57		252.62	0.004632	1.12	8.55	35.99	0.54
2	1107	100-year	4.52	7.37	252	252.6		252.65	0.004538	1.15	9.59	39.68	0.54
2	1107	Regional	9.65	20.72	252	252.87		252.94	0.003919	1.46	22.99	50.81	0.54
2	1057	2-year	0.35	0.47	251.83	252.05		252.06	0.008133	0.62	0.87	9.66	0.57
2	1057	5-year	0.59	0.83	251.83	252.1		252.12	0.006345	0.65	1.76	21.76	0.53
2	1057	10-year	2.81	4.42	251.83	252.31		252.34	0.003673	0.88	7.72	31.52	0.46
2	1057	25-year	3.33	5.61	251.83	252.34		252.37	0.004249	1	8.64	31.98	0.51
2	1057	50-year	3.68	6.48	251.83	252.36		252.4	0.004456	1.06	9.38	32.8	0.52
2	1057	100-year	4.06	7.37	251.83	252.38		252.42	0.004855	1.14	9.99	34.82	0.55
2	1057	Regional	8.64	20.72	251.83	252.61		252.7	0.006472	1.74	18.98	44.03	0.68
2	1007	2-year	0.31	0.47	251.49	251.8		251.81	0.003695	0.54	0.86	5.18	0.41
2	1007	5-year	0.53	0.83	251.49	251.86		251.88	0.004157	0.71	1.21	6.26	0.46
2	1007	10-year	2.45	4.42	251.49	252.05	252.04	252.1	0.005967	1.25	6.98	47.47	0.61
2	1007	25-year	2.91	5.61	251.49	252.09		252.13	0.005829	1.3	8.58	48.74	0.61
2	1007	50-year	3.2	6.48	251.49	252.11		252.16	0.005585	1.32	9.82	51.65	0.6
2	1007	100-year	3.53	7.37	251.49	252.14		252.18	0.005255	1.32	11.22	56.06	0.59
2	1007	Regional	7.33	20.72	251.49	252.4		252.44	0.003523	1.43	28.62	71.47	0.52
2	955.98	2-year	0.26	0.47	251.35	251.62		251.63	0.003636	0.54	0.98	13.09	0.41
2	955.98	5-year	0.44	0.83	251.35	251.67	251.58	251.69	0.003382	0.61	2.09	30.2	0.41
2	955.98	10-year	2.05	4.42	251.35	251.85		251.87	0.003324	0.9	8.65	38.46	0.45
2	955.98	25-year	2.43	5.61	251.35	251.89		251.92	0.003214	0.95	10.36	39.76	0.45
2	955.98	50-year	2.67	6.48	251.35	251.92		251.94	0.003255	0.99	11.36	40.03	0.46
2	955.98	100-year	2.93	7.37	251.35	251.94		251.97	0.003365	1.04	12.31	40.97	0.47
2	955.98	Regional	6	20.72	251.35	252.21		252.26	0.003687	1.45	24.16	47.22	0.53

Reach	River Sta	Profile	Volume	Q Total	Min Ch El	W.S. Elev	Crit W.S.	E.G. Elev	E.G. Slope	Vel Chnl	Flow Area	Top Width	Froude # Chl
			(1000 m3)	(m3/s)	(m)	(m)	(m)	(m)	(m/m)	(m/s)	(m2)	(m)	
2	906	2-year	0.21	0.47	251.1	251.37	251.29	251.4	0.006287	0.64	0.78	9	0.52
2	906	5-year	0.33	0.83	251.1	251.42	251.39	251.45	0.006438	0.72	1.56	20.42	0.54
2	906	10-year	1.45	4.42	251.1	251.61	251.55	251.64	0.003964	0.92	8.57	43.43	0.48
2	906	25-year	1.71	5.61	251.1	251.65	251.56	251.67	0.004073	0.98	10	44.06	0.5
2	906	50-year	1.88	6.48	251.1	251.67	251.59	251.7	0.004049	1.02	11.04	44.39	0.5
2	906	100-year	2.08	7.37	251.1	251.69	251.6	251.72	0.004123	1.06	11.97	44.7	0.51
2	906	Regional	4.34	20.72	251.1	251.92	251.76	251.97	0.004869	1.51	22.66	49.49	0.59
2	855.35	2-year	0.18	0.47	250.77	250.98		251.02	0.008788	0.79	0.63	6.01	0.62
2	855.35	5-year	0.27	0.83	250.77	251.05	251.01	251.08	0.008324	0.9	1.13	9.74	0.63
2	855.35	10-year	1.16	4.42	250.77	251.23	251.23	251.32	0.01426	1.56	4.61	27.88	0.89
2	855.35	25-year	1.37	5.61	250.77	251.27	251.27	251.35	0.013414	1.63	5.65	29.19	0.87
2	855.35	50-year	1.51	6.48	250.77	251.28	251.28	251.38	0.015058	1.77	6.01	29.4	0.93
2	855.35	100-year	1.67	7.37	250.77	251.31	251.3	251.4	0.01331	1.75	6.88	30.21	0.89
2	855.35	Regional	3.42	20.72	250.77	251.68		251.75	0.004986	1.66	19.85	38.65	0.61
2	805.04	2-year	0.14	0.47	250.31	250.65		250.68	0.005274	0.71	0.66	3.2	0.5
2	805.04	5-year	0.21	0.83	250.31	250.76		250.79	0.004346	0.73	1.37	12.24	0.47
2	805.04	10-year	0.77	4.42	250.31	251.1		251.11	0.001211	0.68	11.75	39.13	0.28
2	805.04	25-year	0.9	5.61	250.31	251.15		251.17	0.001225	0.72	13.82	40.06	0.29
2	805.04	50-year	0.99	6.48	250.31	251.19		251.2	0.001233	0.75	15.26	40.87	0.29
2	805.04	100-year	1.1	7.37	250.31	251.23		251.24	0.001188	0.77	16.87	41.31	0.29
2	805.04	Regional	2.13	20.72	250.31	251.61		251.63	0.001246	1.04	33.69	47.69	0.32
1	751	2-year	0.91	0.9	249.78	250.35		250.35	0.006398	0.14	4.63	12.51	0.06
1	751	5-year	1.37	1.58	249.78	250.46		250.47	0.006711	0.16	6.16	14.08	0.07
1	751	10-year	5.57	8.54	249.78	250.89		250.92	0.008811	0.27	16.42	45.77	0.09
1	751	25-year	6.82	10.73	249.78	250.94		250.98	0.0082	0.27	19.16	47.22	0.08
1	751	50-year	7.79	12.52	249.78	250.99		251.02	0.00788	0.27	21.17	48.14	0.08
1	751	100-year	8.86	14.36	249.78	251.03		251.06	0.007721	0.28	23.33	50.22	0.08
1	751	Regional	19.79	37.6	249.78	251.42		251.47	0.00528	0.28	44.27	57.07	0.07
1	704.41	2-year	0.78	0.9	249.62	249.95		250	0.009401	0.97	0.93	4.37	0.67
1	704.41	5-year	1.2	1.58	249.62	250.06		250.12	0.008372	1.07	1.48	5.49	0.66
1	704.41	10-year	5	8.54	249.62	250.56		250.64	0.004379	1.38	8.39	30.81	0.55
1	704.41	25-year	6.12	10.73	249.62	250.65		250.73	0.003833	1.4	11.31	36.47	0.53
1	704.41	50-year	6.99	12.52	249.62	250.71		250.79	0.003463	1.41	13.73	39.81	0.51
1	704.41	100-year	7.96	14.36	249.62	250.77		250.84	0.003191	1.42	16.22	44.23	0.49
1	704.41	Regional	17.88	37.6	249.62	251.24		251.32	0.002253	1.61	38.96	50.96	0.45
1	654	2-year	0.73	0.9	249.32	249.71		249.74	0.003083	0.72	1.27	4.4	0.41
1	654	5-year	1.11	1.58	249.32	249.83		249.87	0.003137	0.9	1.84	5.22	0.44
1	654	10-year	4.61	8.54	249.32	250.26		250.4	0.0053	1.86	6.89	16.68	0.64
1	654	25-year	5.62	10.73	249.32	250.34		250.49	0.005404	1.99	8.34	18.89	0.65
1	654	50-year	6.4	12.52	249.32	250.4		250.56	0.005622	2.11	9.4	20.31	0.67
1	654	100-year	7.25	14.36	249.32	250.49	250.36	250.64	0.004905	2.08	11.49	27.26	0.64
1	654	Regional	16.28	37.6	249.32	250.84	250.82	251.11	0.007564	3.12	24.49	52.4	0.83
1	603.78	2-year	0.68	0.9	248.9	249.29	249.29	249.4	0.021615	1.46	0.62	2.89	1.01
1	603.78	5-year	1.04	1.58	248.9	249.4	249.4	249.53	0.02335	1.57	1.01	4.46	1.06
1	603.78	10-year	4.36	8.54	248.9	249.82	249.82	250.03	0.012397	2.08	4.78	13.58	0.9
1	603.78	25-year	5.33	10.73	248.9	249.89	249.89	250.12	0.01234	2.24	5.74	14.31	0.91
1	603.78	50-year	6.07	12.52	248.9	249.95	249.95	250.2	0.011585	2.32	6.64	15.44	0.9
1	603.78	100-year	6.87	14.36	248.9	249.97	249.97	250.27	0.014121	2.59	6.85	15.92	0.99
1	603.78	Regional	15.33	37.6	248.9	250.45	250.45	250.75	0.008999	2.94	21.16	41.15	0.87
1	554	2-year	0.63	0.9	248.63	248.98		248.99	0.002819	0.59	1.55	6.98	0.38
1	554	5-year	0.96	1.58	248.63	249.08		249.11	0.002527	0.71	2.41	9.85	0.38
1	554	10-year	3.93	8.54	248.63	249.56		249.61	0.001817	1.07	12.93	42.45	0.37
1	554	25-year	4.83	10.73	248.63	249.61		249.66	0.002264	1.24	14.94	48.39	0.42
1	554	50-year	5.51	12.52	248.63	249.65		249.71	0.002401	1.31	16.93	49.75	0.44
1	554	100-year	6.27	14.36	248.63	249.69		249.75	0.002493	1.38	18.92	51.35	0.45
1	554	Regional	14.03	37.6	248.63	250		250.1	0.003371	1.93	36.93	60.92	0.55

Reach	River Sta	Profile	Volume	Q Total	Min Ch El	W.S. Elev	Crit W.S.	E.G. Elev	E.G. Slope	Vel Chnl	Flow Area	Top Width	Froude # Chl
			(1000 m3)	(m3/s)	(m)	(m)	(m)	(m)	(m/m)	(m/s)	(m2)	(m)	
1	503.15	2-year	0.56	0.9	248.39	248.76		248.8	0.005769	0.85	1.07	4.3	0.54
1	503.15	5-year	0.86	1.58	248.39	248.87		248.92	0.006328	1.02	1.56	5.08	0.59
1	503.15	10-year	3.4	8.54	248.39	249.27	249.25	249.41	0.008409	1.78	6.79	40.06	0.75
1	503.15	25-year	4.16	10.73	248.39	249.36	249.36	249.47	0.006273	1.69	10.71	46.77	0.66
1	503.15	50-year	4.76	12.52	248.39	249.39	249.39	249.5	0.006577	1.78	12.09	47.25	0.68
1	503.15	100-year	5.45	14.36	248.39	249.41	249.41	249.54	0.006951	1.88	13.32	47.74	0.71
1	503.15	Regional	12.48	37.6	248.39	249.7		249.86	0.007024	2.37	27.8	52.06	0.75
1	453	2-year	0.51	0.9	248.1	248.37		248.42	0.010855	0.95	0.95	5.26	0.71
1	453	5-year	0.78	1.58	248.1	248.45		248.51	0.010564	1.16	1.4	6.77	0.74
1	453	10-year	3.06	8.54	248.1	248.88	248.88	249.03	0.007125	1.87	7.09	27.92	0.72
1	453	25-year	3.69	10.73	248.1	248.94	248.94	249.1	0.007318	2	8.8	30.83	0.74
1	453	50-year	4.21	12.52	248.1	249	248.99	249.15	0.006909	2.03	10.55	35.45	0.73
1	453	100-year	4.79	14.36	248.1	249.08	249.04	249.2	0.005221	1.89	13.86	45.9	0.64
1	453	Regional	10.89	37.6	248.1	249.55		249.63	0.002798	1.84	38.66	55.74	0.5
1	403	2-year	0.46	0.9	247.7	248.03		248.06	0.00493	0.74	1.23	5.74	0.5
1	403	5-year	0.7	1.58	247.7	248.13		248.17	0.004606	0.9	1.83	7.71	0.51
1	403	10-year	2.7	8.54	247.7	248.63		248.72	0.003428	1.46	8.12	16.79	0.51
1	403	25-year	3.27	10.73	247.7	248.68		248.8	0.004425	1.72	8.97	19.04	0.59
1	403	50-year	3.73	12.52	247.7	248.72		248.86	0.004956	1.88	9.85	20.99	0.63
1	403	100-year	4.21	14.36	247.7	248.76		248.93	0.005652	2.07	10.72	24.54	0.68
1	403	Regional	9.44	37.6	247.7	249.16	249.16	249.42	0.006847	2.87	24.23	42.95	0.79
1	353	2-year	0.4	0.9	247.4	247.73		247.77	0.006903	0.91	1	4.43	0.59
1	353	5-year	0.62	1.58	247.4	247.82		247.89	0.006861	1.13	1.46	5.38	0.62
1	353	10-year	2.34	8.54	247.4	248.28	248.28	248.46	0.007488	2.08	6.23	24.29	0.75
1	353	25-year	2.84	10.73	247.4	248.37	248.37	248.53	0.006256	2.06	8.77	27.99	0.7
1	353	50-year	3.26	12.52	247.4	248.42	248.42	248.58	0.006424	2.15	10.15	33.27	0.71
1	353	100-year	3.69	14.36	247.4	248.48	248.48	248.64	0.006054	2.18	12.44	37.88	0.7
1	353	Regional	8.3	37.6	247.4	248.81	248.79	249.02	0.007156	2.88	26.12	45.78	0.8
1	301.89	2-year	0.35	0.9	247.01	247.28		247.33	0.011277	1.04	0.87	4.31	0.73
1	301.89	5-year	0.54	1.58	247.01	247.39		247.45	0.010615	1.1	1.45	6.92	0.73
1	301.89	10-year	2.07	8.54	247.01	247.68	247.68	247.85	0.012841	2.01	5.6	16.89	0.91
1	301.89	25-year	2.51	10.73	247.01	247.74	247.74	247.93	0.012676	2.15	6.64	18.67	0.92
1	301.89	50-year	2.89	12.52	247.01	247.79	247.79	247.98	0.012472	2.25	7.53	20.41	0.92
1	301.89	100-year	3.25	14.36	247.01	247.84	247.84	248.04	0.011774	2.3	8.63	23.43	0.91
1	301.89	Regional	7.48	37.6	247.01	248.1	248.1	248.55	0.018658	3.64	16.59	38.77	1.21
1	251.57	2-year	0.28	0.9	246.49	246.82	246.78	246.85	0.00745	0.83	1.62	16.74	0.59
1	251.57	5-year	0.43	1.58	246.49	246.87	246.85	246.9	0.00921	0.97	2.5	20.4	0.67
1	251.57	10-year	1.55	8.54	246.49	247.15		247.2	0.005758	1.27	10.23	30.98	0.6
1	251.57	25-year	1.87	10.73	246.49	247.23		247.28	0.004447	1.25	12.88	31.56	0.54
1	251.57	50-year	2.15	12.52	246.49	247.3		247.35	0.003711	1.24	15.07	31.98	0.51
1	251.57	100-year	2.4	14.36	246.49	247.37		247.41	0.003269	1.24	17.13	32.29	0.48
1	251.57	Regional	5.68	37.6	246.49	247.97		248.03	0.001903	1.45	37.67	35.47	0.41
1	199	2-year	0.23	0.97	245.93	246.17	246.17	246.24	0.02364	1.15	0.85	6.31	1
1	199	5-year	0.35	1.71	245.93	246.25	246.23	246.33	0.016374	1.25	1.36	6.81	0.89
1	199	10-year	1.3	9.08	245.93	246.68	246.62	246.88	0.00936	2.03	4.93	10.51	0.81
1	199	25-year	1.56	11.43	245.93	246.76	246.73	247	0.009565	2.22	5.87	12.07	0.84
1	199	50-year	1.79	13.37	245.93	246.82	246.8	247.09	0.00998	2.39	6.55	13.09	0.87
1	199	100-year	2.01	15.33	245.93	246.88	246.86	247.17	0.009555	2.47	7.45	13.78	0.86
1	199	Regional	4.79	40.43	245.93	247.48	247.48	247.86	0.007535	3.13	18.95	24.8	0.83
1	191	2-year	0.22	0.97	245.61	246.13		246.15	0.002361	0.76	1.55	7.13	0.38
1	191	5-year	0.33	1.71	245.61	246.22	246.07	246.27	0.003014	0.99	2.33	8.61	0.44
1	191	10-year	1.23	9.08	245.61	246.66	246.54	246.8	0.005343	1.98	7.27	13.63	0.65
1	191	25-year	1.48	11.43	245.61	246.75	246.62	246.91	0.005659	2.17	8.52	14.5	0.68
1	191	50-year	1.71	13.37	245.61	246.81	246.69	246.99	0.006073	2.33	9.43	15.5	0.71
1	191	100-year	1.91	15.33	245.61	246.87	246.73	247.06	0.006318	2.46	10.39	16.42	0.73
1	191	Regional	4.56	40.43	245.61	247.43	247.32	247.73	0.007177	3.4	21.3	23.12	0.83

Reach	River Sta	Profile	Volume	Q Total	Min Ch El	W.S. Elev	Crit W.S.	E.G. Elev	E.G. Slope	Vel Chnl	Flow Area	Top Width	Froude # Chl
			(1000 m3)	(m3/s)	(m)	(m)	(m)	(m)	(m/m)	(m/s)	(m2)	(m)	
1	146	2-year	0.16	0.97	245.62	245.83	245.83	245.89	0.027833	1.09	0.89	8.2	1.05
1	146	5-year	0.24	1.71	245.62	245.89	245.89	245.96	0.022656	1.2	1.42	9.66	1
1	146	10-year	0.93	9.08	245.62	246.19	246.19	246.39	0.014847	2.01	4.78	12.8	0.97
1	146	25-year	1.12	11.43	245.62	246.25	246.25	246.49	0.014184	2.17	5.69	13.56	0.97
1	146	50-year	1.3	13.37	245.62	246.31	246.31	246.56	0.013228	2.25	6.5	14.24	0.95
1	146	100-year	1.46	15.33	245.62	246.36	246.36	246.63	0.012836	2.34	7.23	14.71	0.95
1	146	Regional	3.57	40.43	245.62	246.88	246.88	247.3	0.009855	3.08	16.47	22.35	0.92
1	119	2-year	0.12	0.97	244.95	245.35		245.36	0.001584	0.51	1.91	6.64	0.3
1	119	5-year	0.19	1.71	244.95	245.46		245.48	0.001785	0.66	2.65	7.17	0.33
1	119	10-year	0.76	9.08	244.95	245.97		246.06	0.002741	1.41	8.32	18.42	0.47
1	119	25-year	0.91	11.43	244.95	246.09		246.19	0.00268	1.51	10.77	26.15	0.47
1	119	50-year	1.06	13.37	244.95	246.15		246.26	0.002854	1.62	12.78	34.49	0.49
1	119	100-year	1.17	15.33	244.95	246.24		246.34	0.002522	1.6	15.91	38.26	0.47
1	119	Regional	2.87	40.43	244.95	246.74		246.85	0.00226	1.92	38.67	48.03	0.47
1	93	2-year	0.09	0.97	244.93	245.21	245.18	245.28	0.011651	1.12	0.92	5.92	0.75
1	93	5-year	0.14	1.71	244.93	245.3	245.28	245.38	0.010934	1.34	1.52	7.7	0.77
1	93	10-year	0.62	9.08	244.93	245.67	245.67	245.93	0.013448	2.51	4.78	9.8	0.97
1	93	25-year	0.74	11.43	244.93	245.76	245.76	246.05	0.013297	2.71	5.69	11.07	0.98
1	93	50-year	0.85	13.37	244.93	245.87	245.87	246.14	0.010848	2.67	7.13	16.35	0.91
1	93	100-year	0.93	15.33	244.93	245.9	245.9	246.21	0.012168	2.9	7.7	17.1	0.97
1	93	Regional	2.29	40.43	244.93	246.51	246.51	246.76	0.007042	3.1	26.86	44.47	0.8
1	50.31	2-year	0.05	0.97	244.35	244.63	244.62	244.69	0.016101	1.14	0.86	4.8	0.85
1	50.31	5-year	0.07	1.71	244.35	244.7	244.69	244.8	0.016636	1.37	1.33	8.15	0.9
1	50.31	10-year	0.3	9.08	244.35	245.02	245	245.14	0.011925	1.8	6.87	21.58	0.86
1	50.31	25-year	0.35	11.43	244.35	245.08		245.22	0.011172	1.9	8.22	22.13	0.85
1	50.31	50-year	0.39	13.37	244.35	245.13		245.27	0.010883	1.98	9.23	22.6	0.85
1	50.31	100-year	0.43	15.33	244.35	245.16	245.12	245.32	0.01158	2.12	9.92	23.2	0.88
1	50.31	Regional	0.9	40.43	244.35	245.48	245.48	245.81	0.014095	3.14	19.25	33.98	1.05
1	0	2-year		0.97	243.72	243.92	243.89	243.97	0.012994	0.92	1.05	6.85	0.75
1	0	5-year		1.71	243.72	243.99	243.95	244.05	0.012989	1.13	1.51	7.21	0.79
1	0	10-year		9.08	243.72	244.34	244.31	244.51	0.012994	1.82	5	13.51	0.89
1	0	25-year		11.43	243.72	244.41	244.39	244.61	0.012997	1.98	5.98	16.75	0.91
1	0	50-year		13.37	243.72	244.45	244.45	244.67	0.012925	2.09	6.82	19.67	0.92
1	0	100-year		15.33	243.72	244.51	244.51	244.73	0.011817	2.14	7.94	21.38	0.89
1	0	Regional		40.43	243.72	244.94	244.94	245.25	0.009129	2.71	20.5	37.82	0.86

APPENDIX 6-4-4

HECRAS Summary Output Tables

Proposed Riparian Model Output

Reach	River Sta	Profile	Volume	Q Total	Min Ch El	W.S. Elev	Crit W.S.	E.G. Elev	E.G. Slope	Vel Chnl	Flow Area	Top Width	Froude # Chl
			(1000 m3)	(m3/s)	(m)	(m)	(m)	(m)	(m/m)	(m/s)	(m2)	(m)	
North MVSP	5139	2-year	0.33	0.09	275.88	275.95	275.95	275.97	0.064736	0.65	0.14	3.43	0.97
North MVSP	5139	5-year	0.51	0.16	275.88	275.98	275.98	276	0.041501	0.62	0.26	4.72	0.81
North MVSP	5139	10-year	1.95	0.9	275.88	276.1	276.07	276.14	0.022904	0.85	1.1	7.71	0.7
North MVSP	5139	25-year	2.29	1.12	275.88	276.13	276.09	276.17	0.021518	0.9	1.29	7.93	0.69
North MVSP	5139	50-year	2.56	1.3	275.88	276.14	276.1	276.19	0.023255	0.97	1.38	8.04	0.73
North MVSP	5139	100-year	2.81	1.48	275.88	276.16	276.12	276.21	0.020929	0.98	1.57	8.42	0.7
North MVSP	5139	Regional	5.26	3.39	275.88	276.3	276.23	276.37	0.021344	1.32	3.08	14.81	0.76
North MVSP	5080	2-year	0.31	0.09	274.88	275.06	274.98	275.06	0.00692	0.35	0.25	2.51	0.36
North MVSP	5080	5-year	0.49	0.16	274.88	275.1	275.02	275.11	0.008269	0.44	0.36	2.97	0.4
North MVSP	5080	10-year	1.88	0.9	274.88	275.26	275.2	275.29	0.010802	0.76	1.42	13.13	0.51
North MVSP	5080	25-year	2.21	1.12	274.88	275.28	275.24	275.31	0.01132	0.82	1.7	15.7	0.53
North MVSP	5080	50-year	2.46	1.3	274.88	275.3	275.26	275.33	0.010963	0.85	2	17.53	0.53
North MVSP	5080	100-year	2.7	1.48	274.88	275.31	275.28	275.34	0.011849	0.9	2.16	17.87	0.55
North MVSP	5080	Regional	5.07	3.39	274.88	275.4	275.36	275.45	0.013087	1.16	3.94	20.26	0.61
North MVSP	5045	2-year	0.31	0.09	274.55	274.62		274.63	0.026831	0.39	0.25	7.24	0.62
North MVSP	5045	5-year	0.47	0.16	274.55	274.64		274.65	0.022893	0.42	0.39	8.44	0.59
North MVSP	5045	10-year	1.83	0.9	274.55	274.72		274.74	0.023703	0.66	1.49	21.11	0.67
North MVSP	5045	25-year	2.15	1.12	274.55	274.73		274.76	0.023421	0.7	1.78	22.6	0.67
North MVSP	5045	50-year	2.39	1.3	274.55	274.74		274.77	0.023368	0.69	2.04	25.03	0.67
North MVSP	5045	100-year	2.62	1.48	274.55	274.76		274.78	0.021324	0.68	2.35	26.2	0.65
North MVSP	5045	Regional	4.91	3.39	274.55	274.83		274.86	0.01906	0.9	4.42	33.3	0.66
North MVSP	5008	2-year	0.29	0.09	274.26	274.33		274.33	0.003864	0.14	0.57	12.96	0.23
North MVSP	5008	5-year	0.45	0.16	274.26	274.35		274.35	0.004345	0.15	0.85	16.92	0.24
North MVSP	5008	10-year	1.74	0.9	274.26	274.45		274.45	0.003722	0.22	3.54	40.81	0.25
North MVSP	5008	25-year	2.03	1.12	274.26	274.47		274.47	0.003646	0.23	4.22	43.15	0.26
North MVSP	5008	50-year	2.26	1.3	274.26	274.48		274.48	0.003638	0.25	4.68	44.2	0.26
North MVSP	5008	100-year	2.48	1.48	274.26	274.48		274.49	0.003752	0.27	5.07	45.77	0.27
North MVSP	5008	Regional	4.64	3.39	274.26	274.56		274.57	0.003747	0.37	8.92	52.44	0.29
North MVSP	4946.01	2-year	0.26	0.09	273.73	273.83		273.83	0.01289	0.31	0.29	6.6	0.44
North MVSP	4946.01	5-year	0.4	0.16	273.73	273.85		273.86	0.010529	0.33	0.51	11.1	0.42
North MVSP	4946.01	10-year	1.54	0.9	273.73	273.92	273.9	273.94	0.017679	0.65	1.76	26.77	0.6
North MVSP	4946.01	25-year	1.8	1.12	273.73	273.93	273.92	273.95	0.019027	0.71	2.04	28.97	0.63
North MVSP	4946.01	50-year	2	1.3	273.73	273.94	273.93	273.96	0.018991	0.74	2.29	29.29	0.63
North MVSP	4946.01	100-year	2.2	1.48	273.73	273.95	273.94	273.97	0.018736	0.77	2.52	29.73	0.64
North MVSP	4946.01	Regional	4.16	3.39	273.73	274.01	273.99	274.04	0.020962	1.01	4.36	34.4	0.71
North MVSP	4885.21	2-year	0.24	0.09	273.02	273.19		273.2	0.008719	0.26	0.35	6.85	0.36
North MVSP	4885.21	5-year	0.37	0.16	273.02	273.21		273.22	0.010798	0.33	0.48	7.93	0.42
North MVSP	4885.21	10-year	1.41	0.9	273.02	273.32		273.33	0.006675	0.47	2.38	29.27	0.38
North MVSP	4885.21	25-year	1.65	1.12	273.02	273.34		273.34	0.00624	0.49	2.97	34.3	0.38
North MVSP	4885.21	50-year	1.84	1.3	273.02	273.34		273.35	0.006476	0.52	3.3	38.63	0.39
North MVSP	4885.21	100-year	2.02	1.48	273.02	273.35		273.36	0.006537	0.54	3.66	40.97	0.39
North MVSP	4885.21	Regional	3.84	3.39	273.02	273.43		273.44	0.006329	0.66	7.34	55.93	0.41
North MVSP	4831.92	2-year	0.22	0.09	272.78	272.81		272.81	0.005376	0.08	0.36	5.8	0.22
North MVSP	4831.92	5-year	0.34	0.16	272.78	272.84		272.85	0.0045	0.13	0.65	9.91	0.24
North MVSP	4831.92	10-year	1.27	0.9	272.78	272.96		272.96	0.006347	0.32	2.62	28.42	0.34
North MVSP	4831.92	25-year	1.49	1.12	272.78	272.97		272.97	0.007197	0.36	2.94	30.43	0.37
North MVSP	4831.92	50-year	1.65	1.3	272.78	272.98		272.99	0.006522	0.37	3.46	35.27	0.36
North MVSP	4831.92	100-year	1.81	1.48	272.78	272.99	272.92	273	0.006493	0.39	3.82	37.34	0.36
North MVSP	4831.92	Regional	3.42	3.39	272.78	273.07	272.98	273.08	0.00689	0.53	7.95	64.54	0.4
North MVSP	4800.81	2-year	0.21	0.09	272.63	272.64	272.6	272.65	0.008714	0.05	0.35	14.83	0.24
North MVSP	4800.81	5-year	0.32	0.16	272.63	272.66	272.64	272.66	0.00892	0.13	0.73	26.65	0.31
North MVSP	4800.81	10-year	1.18	0.9	272.63	272.72	272.68	272.72	0.008466	0.28	3.04	49.8	0.37
North MVSP	4800.81	25-year	1.38	1.12	272.63	272.73	272.69	272.73	0.008163	0.31	3.6	53.42	0.37
North MVSP	4800.81	50-year	1.53	1.3	272.63	272.73	272.7	272.74	0.009223	0.34	3.82	55.15	0.4
North MVSP	4800.81	100-year	1.68	1.48	272.63	272.74		272.74	0.009984	0.37	4.07	57.01	0.42
North MVSP	4800.81	Regional	3.19	3.39	272.63	272.78		272.79	0.012252	0.55	6.9	67.26	0.5
North MVSP	4749.98	2-year	0.16	0.09	272.21	272.32		272.32	0.001816	0.13	0.78	19.33	0.17
North MVSP	4749.98	5-year	0.24	0.16	272.21	272.34		272.34	0.00207	0.17	1.18	30.57	0.19
North MVSP	4749.98	10-year	0.84	0.9	272.21	272.41		272.41	0.002052	0.26	5	65.1	0.21
North MVSP	4749.98	25-year	0.97	1.12	272.21	272.43		272.43	0.002009	0.27	5.88	67.39	0.21

Reach	River Sta	Profile	Volume	Q Total	Min Ch El	W.S. Elev	Crit W.S.	E.G. Elev	E.G. Slope	Vel Chnl	Flow Area	Top Width	Froude # Chl
			(1000 m3)	(m3/s)	(m)	(m)	(m)	(m)	(m/m)	(m/s)	(m2)	(m)	
North MVSP	4749.98	50-year	1.08	1.3	272.21	272.44		272.44	0.001886	0.27	6.66	69.18	0.21
North MVSP	4749.98	100-year	1.19	1.48	272.21	272.45		272.45	0.001832	0.28	7.39	70.89	0.21
North MVSP	4749.98	Regional	2.21	3.39	272.21	272.54		272.55	0.001247	0.3	15.15	88.28	0.18
North MVSP	4701.43	2-year	0.13	0.09	272.05	272.18		272.18	0.004732	0.19	0.5	11.56	0.27
North MVSP	4701.43	5-year	0.19	0.16	272.05	272.2		272.2	0.004222	0.2	0.81	15.11	0.26
North MVSP	4701.43	10-year	0.66	0.9	272.05	272.3		272.31	0.003095	0.32	3.36	32.17	0.26
North MVSP	4701.43	25-year	0.76	1.12	272.05	272.32		272.33	0.003054	0.34	3.92	32.71	0.26
North MVSP	4701.43	50-year	0.84	1.3	272.05	272.34		272.34	0.002835	0.35	4.44	33.54	0.26
North MVSP	4701.43	100-year	0.92	1.48	272.05	272.35		272.36	0.0027	0.36	4.95	35.63	0.25
North MVSP	4701.43	Regional	1.69	3.39	272.05	272.46		272.47	0.00235	0.45	9.38	44.58	0.25
North MVSP	4651.75	2-year	0.1	0.09	271.87	272.01		272.01	0.002654	0.15	0.58	10.18	0.2
North MVSP	4651.75	5-year	0.15	0.16	271.87	272.04		272.04	0.002694	0.18	0.86	12.82	0.21
North MVSP	4651.75	10-year	0.51	0.9	271.87	272.14		272.15	0.003597	0.37	2.62	19.35	0.29
North MVSP	4651.75	25-year	0.6	1.12	271.87	272.16		272.17	0.003919	0.41	2.96	19.87	0.3
North MVSP	4651.75	50-year	0.66	1.3	271.87	272.18		272.18	0.004001	0.44	3.25	20.72	0.31
North MVSP	4651.75	100-year	0.72	1.48	271.87	272.19		272.2	0.00402	0.46	3.55	21.12	0.31
North MVSP	4651.75	Regional	1.32	3.39	271.87	272.31		272.33	0.003805	0.6	6.52	26.79	0.33
North MVSP	4602.06	2-year	0.08	0.09	271.67	271.75	271.73	271.76	0.015648	0.35	0.26	6.03	0.49
North MVSP	4602.06	5-year	0.11	0.16	271.67	271.77	271.75	271.78	0.013682	0.38	0.44	7.99	0.47
North MVSP	4602.06	10-year	0.4	0.9	271.67	271.91	271.83	271.92	0.006509	0.5	2.02	14.84	0.38
North MVSP	4602.06	25-year	0.47	1.12	271.67	271.93	271.83	271.94	0.005854	0.52	2.42	15.55	0.37
North MVSP	4602.06	50-year	0.51	1.3	271.67	271.95	271.87	271.96	0.005472	0.54	2.73	16.14	0.37
North MVSP	4602.06	100-year	0.56	1.48	271.67	271.97	271.88	271.98	0.005313	0.55	3.01	16.65	0.36
North MVSP	4602.06	Regional	1.03	3.39	271.67	272.09	271.95	272.11	0.005637	0.75	5.22	20.2	0.4
North MVSP	4559.74	2-year	0.07	0.09	271.26	271.39		271.39	0.005635	0.23	0.38	6.13	0.3
North MVSP	4559.74	5-year	0.09	0.16	271.26	271.41	271.35	271.42	0.005824	0.29	0.53	6.43	0.32
North MVSP	4559.74	10-year	0.33	0.9	271.26	271.51		271.54	0.014479	0.74	1.26	9.18	0.57
North MVSP	4559.74	25-year	0.39	1.12	271.26	271.52		271.56	0.018032	0.86	1.36	9.56	0.64
North MVSP	4559.74	50-year	0.43	1.3	271.26	271.53	271.5	271.58	0.019879	0.94	1.46	10.75	0.68
North MVSP	4559.74	100-year	0.47	1.48	271.26	271.54	271.51	271.59	0.02112	1	1.58	11.82	0.71
North MVSP	4559.74	Regional	0.87	3.39	271.26	271.64	271.64	271.72	0.023095	1.35	3.09	18.85	0.79
North MVSP	4492.85	2-year	0.05	0.09	270.66	270.74		270.74	0.020815	0.35	0.25	6	0.54
North MVSP	4492.85	5-year	0.06	0.16	270.66	270.76		270.76	0.019344	0.42	0.38	6.71	0.55
North MVSP	4492.85	10-year	0.23	0.9	270.66	270.9		270.91	0.006873	0.56	1.95	17.3	0.4
North MVSP	4492.85	25-year	0.27	1.12	270.66	270.92		270.94	0.005956	0.56	2.43	18.16	0.38
North MVSP	4492.85	50-year	0.3	1.3	270.66	270.94		270.95	0.005669	0.58	2.76	18.62	0.38
North MVSP	4492.85	100-year	0.33	1.48	270.66	270.96		270.97	0.005502	0.6	3.06	19.55	0.38
North MVSP	4492.85	Regional	0.61	3.39	270.66	271.08		271.1	0.004779	0.73	5.89	24.33	0.38
North MVSP	4460.53	2-year	0.03	0.09	270.52	270.62	270.56	270.63	0.001316	0.14	0.73	11.27	0.15
North MVSP	4460.53	5-year	0.04	0.16	270.52	270.65		270.65	0.001374	0.17	1.04	12.94	0.16
North MVSP	4460.53	10-year	0.15	0.9	270.52	270.77		270.77	0.002579	0.38	2.87	18.11	0.25
North MVSP	4460.53	25-year	0.17	1.12	270.52	270.79		270.8	0.00259	0.4	3.32	18.7	0.26
North MVSP	4460.53	50-year	0.19	1.3	270.52	270.8		270.81	0.002881	0.44	3.54	18.96	0.27
North MVSP	4460.53	100-year	0.21	1.48	270.52	270.82		270.83	0.003057	0.47	3.79	19.37	0.28
North MVSP	4460.53	Regional	0.39	3.39	270.52	270.92		270.93	0.004583	0.7	5.84	21.99	0.37
North MVSP	4397.62	2-year		0.12	270.27	270.32	270.32	270.33	0.05453	0.4	0.32	15.38	0.81
North MVSP	4397.62	5-year		0.2	270.27	270.33	270.33	270.34	0.071429	0.52	0.44	18.63	0.95
North MVSP	4397.62	10-year		1.19	270.27	270.4	270.37	270.41	0.019679	0.55	2.47	36.3	0.6
North MVSP	4397.62	25-year		1.47	270.27	270.41	270.39	270.42	0.019578	0.59	2.84	36.74	0.6
North MVSP	4397.62	50-year		1.69	270.27	270.42	270.39	270.43	0.017412	0.59	3.21	37.18	0.58
North MVSP	4397.62	100-year		1.9	270.27	270.43	270.4	270.44	0.015767	0.6	3.57	37.61	0.56
North MVSP	4397.62	Regional		4.94	270.27	270.54	270.46	270.56	0.008635	0.69	8	42.52	0.46
WH-37.12-Prop	3459.49	2-year	2.52	0.17	263.47	263.71		263.72	0.003731	0.46	1.03	18.24	0.38
WH-37.12-Prop	3459.49	5-year	3.99	0.3	263.47	263.74		263.75	0.003403	0.48	1.71	26.03	0.37
WH-37.12-Prop	3459.49	10-year	16.56	1.79	263.47	263.91		263.91	0.002793	0.68	6.76	31.54	0.38
WH-37.12-Prop	3459.49	25-year	19.68	2.23	263.47	263.94		263.95	0.002635	0.71	7.92	31.73	0.37
WH-37.12-Prop	3459.49	50-year	21.98	2.56	263.47	263.97		263.98	0.002515	0.73	8.77	31.86	0.37
WH-37.12-Prop	3459.49	100-year	24.24	2.89	263.47	264		264	0.002392	0.74	9.62	32	0.37
WH-37.12-Prop	3459.49	Regional	52.49	7.76	263.47	264.4		264.41	0.001096	0.79	22.95	34.05	0.28

Reach	River Sta	Profile	Volume	Q Total	Min Ch El	W.S. Elev	Crit W.S.	E.G. Elev	E.G. Slope	Vel Chnl	Flow Area	Top Width	Froude # Chl
			(1000 m3)	(m3/s)	(m)	(m)	(m)	(m)	(m/m)	(m/s)	(m2)	(m)	
WH-37.12-Prop	3410	2-year	2.49	0.17	263.44	263.66		263.66	0.001755	0.33	1.73	32.75	0.27
WH-37.12-Prop	3410	5-year	3.94	0.3	263.44	263.68		263.68	0.002095	0.39	2.41	32.87	0.3
WH-37.12-Prop	3410	10-year	16.37	1.79	263.44	263.85		263.86	0.001702	0.57	8.24	33.91	0.31
WH-37.12-Prop	3410	25-year	19.45	2.23	263.44	263.89		263.9	0.001629	0.59	9.59	34.15	0.3
WH-37.12-Prop	3410	50-year	21.73	2.56	263.44	263.92		263.93	0.001562	0.61	10.58	34.32	0.3
WH-37.12-Prop	3410	100-year	23.97	2.89	263.44	263.95		263.96	0.001489	0.62	11.59	34.5	0.3
WH-37.12-Prop	3410	Regional	51.86	7.76	263.44	264.38		264.38	0.000735	0.69	26.93	37.06	0.23
WH-37.12-Prop	3359.83	2-year	2.39	0.17	263.38	263.59		263.59	0.001063	0.26	2.3	40.82	0.21
WH-37.12-Prop	3359.83	5-year	3.81	0.3	263.38	263.61		263.61	0.001312	0.31	3.12	40.96	0.24
WH-37.12-Prop	3359.83	10-year	15.92	1.79	263.38	263.8		263.8	0.000924	0.43	10.92	42.26	0.23
WH-37.12-Prop	3359.83	25-year	18.93	2.23	263.38	263.84		263.84	0.000876	0.45	12.73	42.55	0.23
WH-37.12-Prop	3359.83	50-year	21.15	2.56	263.38	263.87		263.87	0.000832	0.46	14.09	42.78	0.22
WH-37.12-Prop	3359.83	100-year	23.33	2.89	263.38	263.9		263.91	0.000786	0.47	15.46	43	0.22
WH-37.12-Prop	3359.83	Regional	50.38	7.76	263.38	264.36		264.36	0.000393	0.52	35.67	46.14	0.17
WH-37.12-Prop	3310.14	2-year	2.31	0.17	263.32	263.54		263.54	0.001144	0.28	2	32.05	0.22
WH-37.12-Prop	3310.14	5-year	3.7	0.3	263.32	263.56		263.56	0.00158	0.35	2.62	32.17	0.27
WH-37.12-Prop	3310.14	10-year	15.55	1.79	263.32	263.76		263.76	0.001225	0.51	9.03	33.37	0.26
WH-37.12-Prop	3310.14	25-year	18.49	2.23	263.32	263.8		263.8	0.001166	0.53	10.52	33.64	0.26
WH-37.12-Prop	3310.14	50-year	20.67	2.56	263.32	263.83		263.84	0.001106	0.55	11.66	33.85	0.26
WH-37.12-Prop	3310.14	100-year	22.81	2.89	263.32	263.87		263.87	0.001041	0.56	12.82	34.06	0.25
WH-37.12-Prop	3310.14	Regional	49.17	7.76	263.32	264.34		264.34	0.000538	0.63	29.47	36.94	0.2
WH-37.12-Prop	3260	2-year	2.21	0.17	263.25	263.46		263.46	0.00159	0.32	1.75	30.37	0.26
WH-37.12-Prop	3260	5-year	3.55	0.3	263.25	263.49		263.49	0.00135	0.33	2.72	30.57	0.25
WH-37.12-Prop	3260	10-year	15.05	1.79	263.25	263.69		263.69	0.001184	0.51	8.96	31.86	0.26
WH-37.12-Prop	3260	25-year	17.92	2.23	263.25	263.74		263.74	0.001101	0.53	10.52	32.17	0.26
WH-37.12-Prop	3260	50-year	20.03	2.56	263.25	263.78		263.78	0.001021	0.54	11.75	32.41	0.25
WH-37.12-Prop	3260	100-year	22.1	2.89	263.25	263.81		263.82	0.000945	0.54	12.99	32.66	0.24
WH-37.12-Prop	3260	Regional	47.54	7.76	263.25	264.31		264.31	0.000492	0.62	29.93	35.87	0.2
WH-37.12-Prop	3210.77	2-year	2.11	0.17	263.18	263.4		263.4	0.001021	0.26	2.04	30.48	0.21
WH-37.12-Prop	3210.77	5-year	3.4	0.3	263.18	263.44		263.44	0.000729	0.26	3.33	30.76	0.18
WH-37.12-Prop	3210.77	10-year	14.58	1.79	263.18	263.64		263.64	0.000967	0.47	9.56	32.1	0.24
WH-37.12-Prop	3210.77	25-year	17.37	2.23	263.18	263.69		263.69	0.000887	0.49	11.27	32.46	0.23
WH-37.12-Prop	3210.77	50-year	19.41	2.56	263.18	263.73		263.74	0.000812	0.5	12.64	32.75	0.23
WH-37.12-Prop	3210.77	100-year	21.42	2.89	263.18	263.77		263.78	0.000746	0.5	14.01	33.03	0.22
WH-37.12-Prop	3210.77	Regional	45.98	7.76	263.18	264.29		264.29	0.000409	0.58	31.85	36.51	0.18
WH-37.12-Prop	3165.68	2-year	1.92	0.17	263.09	263.38		263.38	0.000119	0.11	4.19	30.94	0.08
WH-37.12-Prop	3165.68	5-year	3.13	0.3	263.09	263.42		263.42	0.000161	0.15	5.42	31.23	0.09
WH-37.12-Prop	3165.68	10-year	13.96	1.79	263.09	263.59		263.59	0.000653	0.41	10.84	32.45	0.2
WH-37.12-Prop	3165.68	25-year	16.64	2.23	263.09	263.65		263.65	0.000615	0.43	12.68	32.86	0.2
WH-37.12-Prop	3165.68	50-year	18.6	2.56	263.09	263.69		263.69	0.000576	0.44	14.12	33.17	0.19
WH-37.12-Prop	3165.68	100-year	20.51	2.89	263.09	263.74		263.74	0.000533	0.45	15.61	33.5	0.19
WH-37.12-Prop	3165.68	Regional	43.96	7.76	263.09	264.27		264.27	0.000329	0.54	34.35	37.31	0.16
WH-37.12-Prop	3160	2-year	1.89	0.17	263.07	263.38		263.38	0.001405	0.25	0.86	18.21	0.24
WH-37.12-Prop	3160	5-year	3.09	0.3	263.07	263.41		263.42	0.001343	0.27	1.7	25.75	0.24
WH-37.12-Prop	3160	10-year	13.86	1.79	263.07	263.57		263.58	0.001938	0.55	5.87	27.58	0.33
WH-37.12-Prop	3160	25-year	16.51	2.23	263.07	263.63		263.64	0.001446	0.54	7.53	28.15	0.29
WH-37.12-Prop	3160	50-year	18.46	2.56	263.07	263.68		263.68	0.001188	0.53	8.82	28.58	0.27
WH-37.12-Prop	3160	100-year	20.36	2.89	263.07	263.72		263.73	0.00099	0.52	10.16	28.94	0.25
WH-37.12-Prop	3160	Regional	43.59	7.76	263.07	264.26		264.26	0.000386	0.55	26.65	32.89	0.18
WH-37.12-Prop	3122	2-year	1.87	0.19	263.02	263.23		263.25	0.010254	0.57	0.32	3.65	0.61
WH-37.12-Prop	3122	5-year	3.05	0.32	263.02	263.25	263.24	263.28	0.01734	0.79	0.42	6.3	0.81
WH-37.12-Prop	3122	10-year	13.57	1.91	263.02	263.52		263.52	0.00115	0.46	8.56	34.65	0.26
WH-37.12-Prop	3122	25-year	16.14	2.39	263.02	263.59		263.6	0.000792	0.44	11.22	35.57	0.22
WH-37.12-Prop	3122	50-year	18.02	2.75	263.02	263.64		263.65	0.000648	0.43	13.11	35.9	0.2
WH-37.12-Prop	3122	100-year	19.86	3.11	263.02	263.7		263.7	0.000552	0.43	14.96	36.22	0.19
WH-37.12-Prop	3122	Regional	42.35	8.44	263.02	264.25		264.25	0.000271	0.49	35.8	39.68	0.15
WH-37.12-Prop	3111.39	2-year	1.86	0.19	262.98	263.18	263.17	263.19	0.004273	0.51	1.23	32.76	0.43
WH-37.12-Prop	3111.39	5-year	3.04	0.32	262.98	263.2		263.21	0.00412	0.55	2	35.15	0.43
WH-37.12-Prop	3111.39	10-year	13.48	1.91	262.98	263.51		263.51	0.000459	0.37	13.23	37.09	0.17
WH-37.12-Prop	3111.39	25-year	16.02	2.39	262.98	263.59		263.59	0.000384	0.37	16.09	37.57	0.16

Reach	River Sta	Profile	Volume	Q Total	Min Ch El	W.S. Elev	Crit W.S.	E.G. Elev	E.G. Slope	Vel Chnl	Flow Area	Top Width	Froude # Chl
			(1000 m3)	(m3/s)	(m)	(m)	(m)	(m)	(m/m)	(m/s)	(m2)	(m)	
WH-37.12-Prop	3111.39	50-year	17.88	2.75	262.98	263.64		263.64	0.00035	0.38	18.1	37.9	0.15
WH-37.12-Prop	3111.39	100-year	19.7	3.11	262.98	263.69		263.7	0.000323	0.38	20.07	38.22	0.15
WH-37.12-Prop	3111.39	Regional	42	8.44	262.98	264.24		264.25	0.000232	0.49	42.04	41.55	0.14
WH-37.12-Prop	3061.7	2-year	1.8	0.19	262.82	263.11		263.11	0.001042	0.3	2.09	35.47	0.21
WH-37.12-Prop	3061.7	5-year	2.93	0.32	262.82	263.15		263.15	0.000698	0.28	3.65	35.75	0.18
WH-37.12-Prop	3061.7	10-year	12.9	1.91	262.82	263.5		263.5	0.000225	0.29	16.57	38.01	0.12
WH-37.12-Prop	3061.7	25-year	15.32	2.39	262.82	263.58		263.58	0.000208	0.3	19.55	38.51	0.12
WH-37.12-Prop	3061.7	50-year	17.11	2.75	262.82	263.63		263.63	0.0002	0.31	21.64	38.86	0.12
WH-37.12-Prop	3061.7	100-year	18.85	3.11	262.82	263.69		263.69	0.000193	0.32	23.68	39.2	0.12
WH-37.12-Prop	3061.7	Regional	40.28	8.44	262.82	264.24		264.24	0.000175	0.44	46.31	42.76	0.12
WH-37.12-Prop	3041	2-year	1.75	0.19	262.74	263.1		263.1	0.000477	0.23	2.93	42.39	0.15
WH-37.12-Prop	3041	5-year	2.85	0.32	262.74	263.14		263.14	0.000342	0.22	4.95	42.79	0.13
WH-37.12-Prop	3041	10-year	12.58	1.91	262.74	263.5		263.5	0.000141	0.24	20.68	45.79	0.09
WH-37.12-Prop	3041	25-year	14.95	2.39	262.74	263.58		263.58	0.000132	0.25	24.28	46.45	0.09
WH-37.12-Prop	3041	50-year	16.69	2.75	262.74	263.63		263.63	0.000128	0.26	26.8	46.91	0.09
WH-37.12-Prop	3041	100-year	18.39	3.11	262.74	263.68		263.68	0.000125	0.26	29.27	47.35	0.09
WH-37.12-Prop	3041	Regional	39.39	8.44	262.74	264.24		264.24	0.000117	0.36	56.74	52.03	0.1
WH-37.12-Prop	3022.08	2-year	1.69	0.22	262.67	263.09		263.09	0.000265	0.2	3.77	39.05	0.11
WH-37.12-Prop	3022.08	5-year	2.75	0.38	262.67	263.14		263.14	0.000262	0.21	5.65	39.25	0.11
WH-37.12-Prop	3022.08	10-year	12.2	2.21	262.67	263.49		263.5	0.000184	0.28	20.03	41.91	0.11
WH-37.12-Prop	3022.08	25-year	14.5	2.76	262.67	263.57		263.57	0.000179	0.3	23.34	42.87	0.11
WH-37.12-Prop	3022.08	50-year	16.2	3.18	262.67	263.63		263.63	0.000178	0.31	25.68	43.53	0.11
WH-37.12-Prop	3022.08	100-year	17.86	3.61	262.67	263.68		263.68	0.000176	0.32	27.98	44.17	0.11
WH-37.12-Prop	3022.08	Regional	38.36	9.71	262.67	264.23		264.23	0.000172	0.44	54.22	50.52	0.12
WH-37.12-Prop	2934.09	2-year	1.51	0.22	262.84	263.02		263.03	0.004056	0.44	0.48	3.99	0.41
WH-37.12-Prop	2934.09	5-year	2.48	0.38	262.84	263.07		263.08	0.004055	0.54	0.7	4.24	0.43
WH-37.12-Prop	2934.09	10-year	11.25	2.21	262.84	263.4		263.45	0.003729	0.96	2.29	5.33	0.47
WH-37.12-Prop	2934.09	25-year	13.4	2.76	262.84	263.47		263.53	0.003687	1.03	2.68	5.56	0.47
WH-37.12-Prop	2934.09	50-year	14.99	3.18	262.84	263.52		263.58	0.003681	1.08	2.96	5.72	0.48
WH-37.12-Prop	2934.09	100-year	16.54	3.61	262.84	263.57		263.63	0.003654	1.12	3.23	5.88	0.48
WH-37.12-Prop	2934.09	Regional	35.78	9.71	262.84	264.07		264.18	0.002985	1.53	6.57	7.59	0.48
WH-37.12-Prop	2912.72	2-year	1.5	0.22	262.6	262.78	262.78	262.83	0.03224	1.05	0.21	2.19	1.09
WH-37.12-Prop	2912.72	5-year	2.47	0.38	262.6	262.83	262.83	262.9	0.024116	1.13	0.33	2.56	1
WH-37.12-Prop	2912.72	10-year	11.21	2.21	262.6	263.1	263.1	263.26	0.017797	1.8	1.24	3.99	0.99
WH-37.12-Prop	2912.72	25-year	13.35	2.76	262.6	263.16	263.16	263.34	0.016339	1.92	1.47	4.18	0.98
WH-37.12-Prop	2912.72	50-year	14.94	3.18	262.6	263.19	263.19	263.4	0.015831	2	1.63	4.3	0.98
WH-37.12-Prop	2912.72	100-year	16.48	3.61	262.6	263.23	263.23	263.45	0.015211	2.08	1.79	4.43	0.97
WH-37.12-Prop	2912.72	Regional	35.67	9.71	262.6	263.64	263.64	264	0.011465	2.75	3.9	5.88	0.94
WH-37.12-Prop	2855.23	2-year	1.48	0.22	262.13	262.33	262.25	262.33	0.003706	0.4	0.54	4.92	0.38
WH-37.12-Prop	2855.23	5-year	2.44	0.38	262.13	262.37	262.3	262.38	0.004051	0.5	0.78	8.34	0.42
WH-37.12-Prop	2855.23	10-year	11.11	2.21	262.13	262.53	262.48	262.56	0.005374	0.86	3.18	18.73	0.53
WH-37.12-Prop	2855.23	25-year	13.24	2.76	262.13	262.55	262.49	262.59	0.005462	0.91	3.69	18.97	0.54
WH-37.12-Prop	2855.23	50-year	14.81	3.18	262.13	262.57	262.51	262.61	0.005785	0.97	3.98	19.11	0.56
WH-37.12-Prop	2855.23	100-year	16.35	3.61	262.13	262.59	262.53	262.63	0.005645	0.99	4.35	19.24	0.56
WH-37.12-Prop	2855.23	Regional	35.41	9.71	262.13	262.78	262.67	262.86	0.005625	1.36	8.12	20.2	0.61
WH-37.12-Prop	2813.79	2-year	1.46	0.22	261.77	261.88	261.88	261.91	0.076361	0.73	0.3	6.33	1.07
WH-37.12-Prop	2813.79	5-year	2.42	0.38	261.77	261.91	261.91	261.94	0.066298	0.82	0.46	7.34	1.05
WH-37.12-Prop	2813.79	10-year	11	2.21	261.77	262.05	262.05	262.11	0.030102	1.17	2.2	17.42	0.86
WH-37.12-Prop	2813.79	25-year	13.11	2.76	261.77	262.07	262.07	262.14	0.029742	1.24	2.62	18.75	0.88
WH-37.12-Prop	2813.79	50-year	14.67	3.18	261.77	262.1	262.1	262.16	0.026568	1.23	3.02	19.3	0.85
WH-37.12-Prop	2813.79	100-year	16.19	3.61	261.77	262.1	262.1	262.18	0.030862	1.34	3.13	19.36	0.92
WH-37.12-Prop	2813.79	Regional	35.12	9.71	261.77	262.24	262.24	262.39	0.032314	1.83	5.94	20.7	0.99
WH-37.12-Prop	2764.7	2-year	1.43	0.22	261.54	261.55		261.55	0.002048	0.03	1.11	20.95	0.16
WH-37.12-Prop	2764.7	5-year	2.36	0.38	261.54	261.58		261.58	0.001488	0.08	1.9	29.56	0.18
WH-37.12-Prop	2764.7	10-year	10.79	2.21	261.54	261.71		261.71	0.001498	0.29	6.17	35.48	0.25
WH-37.12-Prop	2764.7	25-year	12.87	2.76	261.54	261.73		261.74	0.00159	0.33	6.98	35.96	0.27
WH-37.12-Prop	2764.7	50-year	14.4	3.18	261.54	261.75		261.76	0.00151	0.35	7.76	36.21	0.27
WH-37.12-Prop	2764.7	100-year	15.91	3.61	261.54	261.77		261.78	0.001562	0.38	8.32	36.4	0.27
WH-37.12-Prop	2764.7	Regional	34.61	9.71	261.54	261.94		261.96	0.001905	0.64	14.58	37.86	0.34

Reach	River Sta	Profile	Volume	Q Total	Min Ch El	W.S. Elev	Crit W.S.	E.G. Elev	E.G. Slope	Vel Chnl	Flow Area	Top Width	Froude # Chl
			(1000 m3)	(m3/s)	(m)	(m)	(m)	(m)	(m/m)	(m/s)	(m2)	(m)	
WH-37.12-Prop	2721.34	2-year	1.41	0.22	261.16	261.35	261.35	261.39	0.020298	0.89	0.25	2.43	0.88
WH-37.12-Prop	2721.34	5-year	2.32	0.39	261.16	261.39	261.39	261.45	0.025142	1.08	0.36	3.03	1.01
WH-37.12-Prop	2721.34	10-year	10.64	2.27	261.16	261.55	261.55	261.59	0.016883	1.12	3.14	30.32	0.88
WH-37.12-Prop	2721.34	25-year	12.7	2.84	261.16	261.56	261.56	261.61	0.02122	1.23	3.46	31.05	0.98
WH-37.12-Prop	2721.34	50-year	14.22	3.28	261.16	261.57	261.57	261.63	0.025547	1.37	3.58	31.18	1.07
WH-37.12-Prop	2721.34	100-year	15.71	3.73	261.16	261.58	261.58	261.64	0.02468	1.38	3.97	31.67	1.06
WH-37.12-Prop	2721.34	Regional	34.25	10.12	261.16	261.69	261.69	261.79	0.025583	1.8	7.7	35.54	1.15
WH-37.12-Prop	2678.01	2-year	1.38	0.22	260.42	260.77		260.77	0.000829	0.2	1.09	9.01	0.19
WH-37.12-Prop	2678.01	5-year	2.28	0.39	260.42	260.81		260.82	0.000912	0.26	1.52	9.62	0.2
WH-37.12-Prop	2678.01	10-year	10.5	2.27	260.42	261.03		261.05	0.001625	0.56	4.4	19.55	0.31
WH-37.12-Prop	2678.01	25-year	12.54	2.84	260.42	261.07		261.09	0.001721	0.61	5.25	24.73	0.32
WH-37.12-Prop	2678.01	50-year	14.05	3.28	260.42	261.09		261.12	0.001834	0.65	5.88	26.7	0.33
WH-37.12-Prop	2678.01	100-year	15.53	3.73	260.42	261.12		261.14	0.001867	0.68	6.58	29.91	0.34
WH-37.12-Prop	2678.01	Regional	33.93	10.12	260.42	261.34		261.38	0.002374	0.99	14.34	39.62	0.4
WH-37.12-Prop	2644.21	2-year	1.36	0.22	260.5	260.67	260.65	260.69	0.015505	0.62	0.36	4.88	0.73
WH-37.12-Prop	2644.21	5-year	2.24	0.39	260.5	260.72	260.68	260.74	0.011704	0.58	0.67	8.07	0.65
WH-37.12-Prop	2644.21	10-year	10.39	2.27	260.5	260.86	260.84	260.91	0.015045	1.05	2.31	18.13	0.83
WH-37.12-Prop	2644.21	25-year	12.41	2.84	260.5	260.88	260.86	260.94	0.015953	1.16	2.66	19.02	0.87
WH-37.12-Prop	2644.21	50-year	13.9	3.28	260.5	260.89	260.89	260.96	0.016263	1.23	2.94	19.94	0.89
WH-37.12-Prop	2644.21	100-year	15.36	3.73	260.5	260.9	260.9	260.98	0.016279	1.29	3.23	21.5	0.9
WH-37.12-Prop	2644.21	Regional	33.55	10.12	260.5	261.06	261.06	261.19	0.013671	1.72	7.42	28.77	0.9
WH-37.12-Prop	2614.5	2-year	1.34	0.22	260.11	260.28	260.26	260.3	0.011706	0.61	0.36	4.15	0.66
WH-37.12-Prop	2614.5	5-year	2.23	0.39	260.11	260.32	260.29	260.34	0.014862	0.75	0.52	5.21	0.76
WH-37.12-Prop	2614.5	10-year	10.31	2.27	260.11	260.5	260.48	260.56	0.009506	1.13	2.7	20.76	0.71
WH-37.12-Prop	2614.5	25-year	12.31	2.84	260.11	260.54	260.51	260.59	0.008691	1.17	3.41	22.09	0.69
WH-37.12-Prop	2614.5	50-year	13.79	3.28	260.11	260.56	260.54	260.62	0.007961	1.18	4	24.34	0.67
WH-37.12-Prop	2614.5	100-year	15.23	3.73	260.11	260.58	260.55	260.64	0.007508	1.2	4.57	26.09	0.66
WH-37.12-Prop	2614.5	Regional	33.19	10.12	260.11	260.85	260.72	260.9	0.003687	1.24	13.71	39.83	0.5
WH-37.12-Prop	2564.81	2-year	1.32	0.22	259.73	259.94	259.87	259.95	0.004534	0.43	0.52	4.96	0.42
WH-37.12-Prop	2564.81	5-year	2.19	0.39	259.73	260	259.92	260.01	0.003674	0.47	0.83	5.95	0.4
WH-37.12-Prop	2564.81	10-year	10.17	2.27	259.73	260.23	260.11	260.26	0.00408	0.86	3.03	15.37	0.48
WH-37.12-Prop	2564.81	25-year	12.14	2.84	259.73	260.26	260.16	260.31	0.004176	0.93	3.63	16.16	0.5
WH-37.12-Prop	2564.81	50-year	13.59	3.28	259.73	260.29	260.18	260.33	0.004377	0.99	4	16.78	0.51
WH-37.12-Prop	2564.81	100-year	15.01	3.73	259.73	260.31	260.2	260.36	0.004579	1.05	4.35	17.91	0.53
WH-37.12-Prop	2564.81	Regional	32.67	10.12	259.73	260.45	260.45	260.6	0.009459	1.86	7.74	29.24	0.8
WH-37.12-Prop	2515.12	2-year	1.3	0.22	259.48	259.64	259.61	259.65	0.008123	0.53	0.49	7.41	0.55
WH-37.12-Prop	2515.12	5-year	2.16	0.39	259.48	259.65	259.64	259.68	0.015827	0.79	0.59	8.15	0.78
WH-37.12-Prop	2515.12	10-year	10.04	2.27	259.48	259.78	259.78	259.84	0.025541	1.27	2.07	15.2	1.05
WH-37.12-Prop	2515.12	25-year	11.99	2.84	259.48	259.8	259.8	259.88	0.026384	1.4	2.37	16.03	1.09
WH-37.12-Prop	2515.12	50-year	13.43	3.28	259.48	259.82	259.82	259.9	0.022664	1.41	2.76	16.99	1.03
WH-37.12-Prop	2515.12	100-year	14.83	3.73	259.48	259.84	259.84	259.92	0.021697	1.46	3.06	17.66	1.02
WH-37.12-Prop	2515.12	Regional	32.1	10.12	259.48	260.25	260.02	260.28	0.002575	1.03	14.67	35.69	0.42
WH-37.12-Prop	2493	2-year	1.28	0.22	259.12	259.27	259.26	259.29	0.015882	0.65	0.34	4.4	0.75
WH-37.12-Prop	2493	5-year	2.14	0.39	259.12	259.34	259.29	259.35	0.007015	0.53	0.74	7.13	0.52
WH-37.12-Prop	2493	10-year	9.91	2.27	259.12	259.64	259.45	259.65	0.001231	0.49	5.89	26.09	0.27
WH-37.12-Prop	2493	25-year	11.83	2.84	259.12	259.69	259.49	259.7	0.001108	0.51	7.27	27.84	0.26
WH-37.12-Prop	2493	50-year	13.25	3.28	259.12	259.73	259.51	259.74	0.001027	0.52	8.29	28.38	0.25
WH-37.12-Prop	2493	100-year	14.63	3.73	259.12	259.77	259.53	259.78	0.000924	0.53	9.46	29.37	0.24
WH-37.12-Prop	2493	Regional	31.38	10.12	259.12	260.24	259.7	260.25	0.000388	0.54	28.85	49.04	0.18
WH-37.12-Prop	2474	2-year	1.27	0.22	258.85	259.22	259.05	259.23	0.001193	0.35	0.66	3.84	0.24
WH-37.12-Prop	2474	5-year	2.12	0.39	258.85	259.29	259.11	259.3	0.001402	0.46	0.96	4.89	0.27
WH-37.12-Prop	2474	10-year	9.79	2.27	258.85	259.6	259.44	259.62	0.001463	0.76	6.16	32.25	0.31
WH-37.12-Prop	2474	25-year	11.68	2.84	258.85	259.66	259.49	259.68	0.001214	0.74	8.12	35.01	0.29
WH-37.12-Prop	2474	50-year	13.07	3.28	258.85	259.7	259.52	259.72	0.001061	0.72	9.56	35.84	0.27
WH-37.12-Prop	2474	100-year	14.42	3.73	258.85	259.75	259.52	259.76	0.000897	0.69	11.2	36.53	0.26
WH-37.12-Prop	2474	Regional	30.76	10.12	258.85	260.23	259.72	260.24	0.00032	0.58	34.26	53.78	0.17
WH-37.12-Prop	2429	2-year	1.26	0.22	258.92	259.07	259.07	259.11	0.024024	0.87	0.26	2.91	0.94
WH-37.12-Prop	2429	5-year	2.1	0.39	258.92	259.11	259.11	259.16	0.023012	1.02	0.38	3.31	0.96
WH-37.12-Prop	2429	10-year	9.63	2.27	258.92	259.4	259.34	259.5	0.009664	1.41	1.7	5.77	0.75
WH-37.12-Prop	2429	25-year	11.46	2.84	258.92	259.47	259.39	259.57	0.008066	1.45	2.13	6.21	0.7

Reach	River Sta	Profile	Volume	Q Total	Min Ch El	W.S. Elev	Crit W.S.	E.G. Elev	E.G. Slope	Vel Chnl	Flow Area	Top Width	Froude # Chl
			(1000 m3)	(m3/s)	(m)	(m)	(m)	(m)	(m/m)	(m/s)	(m2)	(m)	
WH-37.12-Prop	2429	50-year	12.81	3.28	258.92	259.52	259.43	259.62	0.007318	1.48	2.44	6.41	0.68
WH-37.12-Prop	2429	100-year	14.12	3.73	258.92	259.56	259.46	259.67	0.006776	1.52	2.74	6.61	0.67
WH-37.12-Prop	2429	Regional	29.89	10.12	258.92	260.04	259.8	260.19	0.004504	1.9	7.26	17.63	0.6
WH-37.12-Prop	2380	2-year	1.23	0.22	258.52	258.84	258.67	258.84	0.000843	0.28	0.79	3.98	0.2
WH-37.12-Prop	2380	5-year	2.06	0.39	258.52	258.91	258.72	258.92	0.001046	0.35	1.11	4.48	0.22
WH-37.12-Prop	2380	10-year	9.51	2.27	258.52	259.28	258.97	259.32	0.001654	0.79	3.11	6.1	0.32
WH-37.12-Prop	2380	25-year	11.32	2.84	258.52	259.35	259.02	259.39	0.001789	0.89	3.54	6.39	0.34
WH-37.12-Prop	2380	50-year	12.66	3.28	258.52	259.4	259.05	259.44	0.001879	0.95	3.85	6.59	0.35
WH-37.12-Prop	2380	100-year	13.95	3.73	258.52	259.45	259.09	259.5	0.001959	1.01	4.16	6.79	0.36
WH-37.12-Prop	2380	Regional	29.53	10.12	258.52	259.89	259.46	260.01	0.002817	1.63	7.67	9.66	0.47
WH-37.12-Prop	2364.8	2-year	1.22	0.22	258.55	258.82	258.68	258.83	0.001042	0.31	0.73	3.88	0.22
WH-37.12-Prop	2364.8	5-year	2.04	0.39	258.55	258.89	258.73	258.9	0.001164	0.39	1.01	4.2	0.24
WH-37.12-Prop	2364.8	10-year	9.46	2.27	258.55	259.25	258.97	259.29	0.001764	0.85	2.81	5.79	0.35
WH-37.12-Prop	2364.8	25-year	11.27	2.84	258.55	259.32	259.02	259.36	0.001862	0.94	3.21	6.07	0.36
WH-37.12-Prop	2364.8	50-year	12.6	3.28	258.55	259.37	259.06	259.41	0.00192	0.99	3.49	6.29	0.37
WH-37.12-Prop	2364.8	100-year	13.89	3.73	258.55	259.41	259.1	259.46	0.001963	1.04	3.77	6.5	0.38
WH-37.12-Prop	2364.8	Regional	29.42	10.12	258.55	259.85	259.47	259.97	0.002138	1.47	7.14	9.5	0.43
WH-37.12-Prop	2314	2-year	1.19	0.22	258.53	258.75	258.65	258.76	0.002005	0.38	0.59	3.59	0.3
WH-37.12-Prop	2314	5-year	2	0.39	258.53	258.81	258.69	258.82	0.002385	0.48	0.8	3.83	0.34
WH-37.12-Prop	2314	10-year	9.34	2.27	258.53	259.07	258.94	259.15	0.005048	1.19	2.01	5.61	0.56
WH-37.12-Prop	2314	25-year	11.14	2.84	258.53	259.11	258.99	259.2	0.00593	1.36	2.23	5.8	0.61
WH-37.12-Prop	2314	50-year	12.46	3.28	258.53	259.12	259.03	259.24	0.00745	1.54	2.28	5.83	0.69
WH-37.12-Prop	2314	100-year	13.74	3.73	258.53	259.15	259.07	259.28	0.007827	1.64	2.45	5.94	0.71
WH-37.12-Prop	2314	Regional	29.13	10.12	258.53	259.44	259.44	259.75	0.010723	2.57	4.37	7.1	0.9
WH-37.12-Prop	2264.17	2-year	1.15	0.22	258.46	258.51	258.5	258.52	0.013919	0.26	0.84	26.51	0.57
WH-37.12-Prop	2264.17	5-year	1.94	0.39	258.46	258.52	258.51	258.53	0.021024	0.4	1.15	32.18	0.74
WH-37.12-Prop	2264.17	10-year	9.15	2.27	258.46	258.59	258.57	258.61	0.0199	0.63	4.31	59.52	0.81
WH-37.12-Prop	2264.17	25-year	10.91	2.84	258.46	258.61	258.58	258.62	0.017792	0.69	5.18	61.27	0.79
WH-37.12-Prop	2264.17	50-year	12.19	3.28	258.46	258.62	258.59	258.64	0.013434	0.68	6.28	62.81	0.71
WH-37.12-Prop	2264.17	100-year	13.45	3.73	258.46	258.63	258.59	258.65	0.01386	0.73	6.74	63.38	0.73
WH-37.12-Prop	2264.17	Regional	28.5	10.12	258.46	258.76	258.67	258.78	0.007256	0.92	15.43	69.36	0.61
WH-37.12-Prop	2213.86	2-year	1.09	0.22	258.06	258.17	258.14	258.17	0.003825	0.23	1.28	29.74	0.34
WH-37.12-Prop	2213.86	5-year	1.86	0.39	258.06	258.19	258.15	258.19	0.003262	0.25	2.03	35.31	0.33
WH-37.12-Prop	2213.86	10-year	8.86	2.27	258.06	258.31	258.21	258.31	0.002719	0.45	6.9	43.81	0.35
WH-37.12-Prop	2213.86	25-year	10.57	2.84	258.06	258.33	258.22	258.34	0.002738	0.49	7.94	44.63	0.36
WH-37.12-Prop	2213.86	50-year	11.81	3.28	258.06	258.35	258.23	258.35	0.002867	0.53	8.6	45.68	0.37
WH-37.12-Prop	2213.86	100-year	13.04	3.73	258.06	258.36	258.24	258.37	0.002914	0.56	9.3	46.44	0.38
WH-37.12-Prop	2213.86	Regional	27.65	10.12	258.06	258.53	258.33	258.55	0.003347	0.87	17.8	58.44	0.45
WH-37.12-Prop	2163.54	2-year	1.05	0.22	257.79	257.91	257.87	257.92	0.006724	0.43	0.51	6.49	0.49
WH-37.12-Prop	2163.54	5-year	1.79	0.39	257.79	257.94	257.9	257.95	0.007845	0.49	0.79	9.83	0.54
WH-37.12-Prop	2163.54	10-year	8.6	2.27	257.79	258.05	258.03	258.09	0.009574	0.89	3.58	34.77	0.67
WH-37.12-Prop	2163.54	25-year	10.27	2.84	257.79	258.07	258.05	258.11	0.009473	0.95	4.27	35.51	0.68
WH-37.12-Prop	2163.54	50-year	11.48	3.28	257.79	258.09	258.06	258.13	0.00884	0.97	4.86	36.06	0.66
WH-37.12-Prop	2163.54	100-year	12.67	3.73	257.79	258.11	258.07	258.14	0.008541	0.99	5.41	36.71	0.66
WH-37.12-Prop	2163.54	Regional	26.9	10.12	257.79	258.28	258.19	258.32	0.006104	1.21	12.21	43.3	0.61
WH-37.12-Prop	2113	2-year	1.02	0.22	257.5	257.68	257.65	257.69	0.003672	0.42	0.81	14.17	0.38
WH-37.12-Prop	2113	5-year	1.74	0.39	257.5	257.72	257.68	257.73	0.003151	0.43	1.45	20.17	0.37
WH-37.12-Prop	2113	10-year	8.36	2.27	257.5	257.83	257.78	257.84	0.002934	0.59	6.26	46.95	0.39
WH-37.12-Prop	2113	25-year	9.98	2.84	257.5	257.85	257.79	257.86	0.002883	0.62	7.28	47.58	0.39
WH-37.12-Prop	2113	50-year	11.16	3.28	257.5	257.87	257.79	257.88	0.003079	0.66	7.81	47.91	0.4
WH-37.12-Prop	2113	100-year	12.33	3.73	257.5	257.88	257.8	257.89	0.003168	0.69	8.4	48.27	0.41
WH-37.12-Prop	2113	Regional	26.26	10.12	257.5	257.97	257.88	258.01	0.005784	1.13	13.07	50.56	0.59
WH-37.12-Prop	2063	2-year	0.99	0.22	257.23	257.36	257.35	257.37	0.012199	0.53	0.53	8.67	0.64
WH-37.12-Prop	2063	5-year	1.69	0.39	257.23	257.39	257.37	257.4	0.017327	0.69	0.78	13.92	0.78
WH-37.12-Prop	2063	10-year	8.11	2.27	257.23	257.47	257.47	257.51	0.023484	1.14	3.43	49.5	0.99
WH-37.12-Prop	2063	25-year	9.7	2.84	257.23	257.49	257.49	257.53	0.025592	1.25	3.97	51.39	1.04
WH-37.12-Prop	2063	50-year	10.85	3.28	257.23	257.5	257.5	257.54	0.023744	1.27	4.54	52.73	1.02
WH-37.12-Prop	2063	100-year	11.99	3.73	257.23	257.51	257.51	257.55	0.022298	1.28	5.09	53.75	1
WH-37.12-Prop	2063	Regional	25.56	10.12	257.23	257.68	257.58	257.7	0.006511	1.1	14.93	61.86	0.61

Reach	River Sta	Profile	Volume	Q Total	Min Ch El	W.S. Elev	Crit W.S.	E.G. Elev	E.G. Slope	Vel Chnl	Flow Area	Top Width	Froude # Chl
			(1000 m3)	(m3/s)	(m)	(m)	(m)	(m)	(m/m)	(m/s)	(m2)	(m)	
WH-37.12-Prop	2027	2-year	0.96	0.25	256.94	257.17	257.08	257.18	0.003285	0.4	0.76	11.52	0.37
WH-37.12-Prop	2027	5-year	1.64	0.43	256.94	257.22	257.15	257.23	0.002389	0.38	1.79	32.16	0.33
WH-37.12-Prop	2027	10-year	7.83	2.53	256.94	257.38	257.28	257.38	0.001003	0.39	12.56	85.79	0.23
WH-37.12-Prop	2027	25-year	9.36	3.16	256.94	257.41	257.29	257.41	0.000947	0.4	14.92	88.86	0.23
WH-37.12-Prop	2027	50-year	10.47	3.64	256.94	257.43	257.3	257.43	0.000939	0.41	16.52	92.73	0.23
WH-37.12-Prop	2027	100-year	11.57	4.13	256.94	257.44	257.31	257.45	0.000922	0.42	18.18	98.69	0.23
WH-37.12-Prop	2027	Regional	24.55	11.29	256.94	257.64	257.39	257.64	0.000701	0.49	41.5	131.38	0.21
WH-37.12-Prop	2010	2-year	0.95	0.25	256.89	257.11	257.03	257.12	0.003435	0.44	0.58	6.18	0.38
WH-37.12-Prop	2010	5-year	1.61	0.43	256.89	257.17	257.07	257.18	0.003214	0.42	1.4	21.04	0.37
WH-37.12-Prop	2010	10-year	7.61	2.53	256.89	257.36	257.24	257.37	0.000998	0.36	12.49	90.47	0.23
WH-37.12-Prop	2010	25-year	9.1	3.16	256.89	257.39	257.26	257.4	0.000953	0.38	15.12	96.06	0.23
WH-37.12-Prop	2010	50-year	10.18	3.64	256.89	257.41	257.27	257.41	0.00091	0.39	16.88	97.69	0.22
WH-37.12-Prop	2010	100-year	11.25	4.13	256.89	257.43	257.28	257.43	0.000878	0.39	18.65	100.09	0.22
WH-37.12-Prop	2010	Regional	23.84	11.29	256.89	257.63	257.37	257.63	0.000674	0.48	40.86	121.04	0.21
WH-37.12-Prop	1979	2-year	0.93	0.25	256.79	257.01	256.94	257.02	0.003522	0.46	0.57	6	0.39
WH-37.12-Prop	1979	5-year	1.57	0.43	256.79	257.07	256.98	257.09	0.002667	0.51	1.03	8.21	0.36
WH-37.12-Prop	1979	10-year	7.32	2.53	256.79	257.29	257.22	257.31	0.002748	0.85	6.14	40.93	0.41
WH-37.12-Prop	1979	25-year	8.75	3.16	256.79	257.32	257.24	257.34	0.002761	0.89	7.39	42.64	0.42
WH-37.12-Prop	1979	50-year	9.79	3.64	256.79	257.34	257.25	257.36	0.002727	0.91	8.27	43.29	0.42
WH-37.12-Prop	1979	100-year	10.82	4.13	256.79	257.36	257.28	257.38	0.002746	0.93	9.05	43.83	0.42
WH-37.12-Prop	1979	Regional	22.92	11.29	256.79	257.56	257.41	257.59	0.002802	1.18	18.27	49.27	0.45
WH-37.12-Prop	1959	2-year	0.92	0.25	256.68	256.97		256.98	0.001282	0.34	0.73	3.82	0.25
WH-37.12-Prop	1959	5-year	1.55	0.43	256.68	257.03		257.04	0.001521	0.44	1.02	7.6	0.28
WH-37.12-Prop	1959	10-year	7.21	2.53	256.68	257.22		257.25	0.003229	0.93	5.37	38.09	0.45
WH-37.12-Prop	1959	25-year	8.62	3.16	256.68	257.25		257.28	0.00335	0.99	6.45	40.21	0.46
WH-37.12-Prop	1959	50-year	9.64	3.64	256.68	257.27		257.3	0.003329	1.01	7.31	40.96	0.46
WH-37.12-Prop	1959	100-year	10.66	4.13	256.68	257.29		257.32	0.003336	1.04	8.06	41.28	0.47
WH-37.12-Prop	1959	Regional	22.58	11.29	256.68	257.49		257.52	0.003474	1.32	16.9	49.04	0.5
WH-37.12-Prop	1911.97	2-year	0.89	0.25	256.62	256.8	256.79	256.82	0.01876	0.72	0.44	8.31	0.81
WH-37.12-Prop	1911.97	5-year	1.51	0.43	256.62	256.82	256.81	256.85	0.022773	0.89	0.7	13.57	0.94
WH-37.12-Prop	1911.97	10-year	7.01	2.53	256.62	256.95	256.93	256.99	0.013073	1.09	3.63	27.2	0.78
WH-37.12-Prop	1911.97	25-year	8.37	3.16	256.62	256.98	256.95	257.02	0.013017	1.17	4.31	29.44	0.8
WH-37.12-Prop	1911.97	50-year	9.37	3.64	256.62	256.99	256.96	257.03	0.013428	1.23	4.68	29.64	0.82
WH-37.12-Prop	1911.97	100-year	10.36	4.13	256.62	257	256.96	257.05	0.013063	1.26	5.12	29.87	0.81
WH-37.12-Prop	1911.97	Regional	21.96	11.29	256.62	257.17		257.24	0.012465	1.71	10.32	35.2	0.86
WH-37.12-Prop	1861.65	2-year	0.85	0.25	256.27	256.36		256.36	0.004375	0.3	1.05	16.43	0.38
WH-37.12-Prop	1861.65	5-year	1.45	0.43	256.27	256.39		256.39	0.003919	0.35	1.66	21.49	0.38
WH-37.12-Prop	1861.65	10-year	6.74	2.53	256.27	256.51		256.53	0.005299	0.71	5.53	35.05	0.51
WH-37.12-Prop	1861.65	25-year	8.06	3.16	256.27	256.54		256.56	0.005077	0.75	6.46	35.66	0.5
WH-37.12-Prop	1861.65	50-year	9.03	3.64	256.27	256.56		256.57	0.00512	0.79	7.06	36.04	0.51
WH-37.12-Prop	1861.65	100-year	9.99	4.13	256.27	256.57		256.59	0.005122	0.83	7.68	36.86	0.52
WH-37.12-Prop	1861.65	Regional	21.23	11.29	256.27	256.76		256.8	0.004851	1.16	15.3	43.67	0.55
WH-37.12-Prop	1811.34	2-year	0.81	0.25	256.05	256.17		256.18	0.005522	0.35	0.92	17.18	0.43
WH-37.12-Prop	1811.34	5-year	1.38	0.43	256.05	256.2		256.21	0.005115	0.43	1.51	24.63	0.44
WH-37.12-Prop	1811.34	10-year	6.49	2.53	256.05	256.35		256.36	0.003201	0.63	6.61	39.64	0.41
WH-37.12-Prop	1811.34	25-year	7.77	3.16	256.05	256.37		256.39	0.003343	0.69	7.63	41.85	0.42
WH-37.12-Prop	1811.34	50-year	8.71	3.64	256.05	256.4		256.41	0.003153	0.7	8.56	42.71	0.42
WH-37.12-Prop	1811.34	100-year	9.63	4.13	256.05	256.42		256.43	0.003066	0.72	9.39	43.46	0.41
WH-37.12-Prop	1811.34	Regional	20.51	11.29	256.05	256.61		256.63	0.003057	1	18.8	52.96	0.45
WH-37.12-Prop	1761.02	2-year	0.76	0.25	255.86	256.01	255.97	256.02	0.002069	0.29	1.2	20.58	0.28
WH-37.12-Prop	1761.02	5-year	1.3	0.43	255.86	256.04	255.99	256.05	0.002095	0.34	1.88	25.02	0.3
WH-37.12-Prop	1761.02	10-year	6.16	2.53	255.86	256.2	256.09	256.21	0.002547	0.62	6.63	37.06	0.37
WH-37.12-Prop	1761.02	25-year	7.38	3.16	255.86	256.23	256.11	256.24	0.002599	0.68	7.8	39.56	0.38
WH-37.12-Prop	1761.02	50-year	8.27	3.64	255.86	256.25	256.12	256.26	0.002736	0.72	8.66	43.21	0.4
WH-37.12-Prop	1761.02	100-year	9.16	4.13	255.86	256.27	256.14	256.28	0.002815	0.76	9.48	45.58	0.41
WH-37.12-Prop	1761.02	Regional	19.58	11.29	255.86	256.44	256.28	256.46	0.003585	1.11	18.2	58.63	0.49
WH-37.12-Prop	1710.71	2-year	0.71	0.25	255.72	255.86		255.87	0.004879	0.39	0.9	16.59	0.42
WH-37.12-Prop	1710.71	5-year	1.21	0.43	255.72	255.89		255.9	0.004273	0.45	1.58	26.7	0.42
WH-37.12-Prop	1710.71	10-year	5.82	2.53	255.72	256.02		256.04	0.004389	0.75	5.93	43.7	0.48
WH-37.12-Prop	1710.71	25-year	6.98	3.16	255.72	256.05		256.06	0.004285	0.79	7.19	52.16	0.48

Reach	River Sta	Profile	Volume	Q Total	Min Ch El	W.S. Elev	Crit W.S.	E.G. Elev	E.G. Slope	Vel Chnl	Flow Area	Top Width	Froude # Chl
			(1000 m3)	(m3/s)	(m)	(m)	(m)	(m)	(m/m)	(m/s)	(m2)	(m)	
WH-37.12-Prop	1710.71	50-year	7.83	3.64	255.72	256.06		256.08	0.004293	0.82	8.02	56.02	0.49
WH-37.12-Prop	1710.71	100-year	8.67	4.13	255.72	256.08		256.09	0.004319	0.85	8.86	60.26	0.49
WH-37.12-Prop	1710.71	Regional	18.58	11.29	255.72	256.22		256.25	0.00465	1.14	19	78.71	0.54
WH-37.12-Prop	1660.39	2-year	0.65	0.25	255.63	255.67		255.68	0.003416	0.15	1.4	28.68	0.29
WH-37.12-Prop	1660.39	5-year	1.12	0.43	255.63	255.69		255.7	0.003912	0.19	2	35.54	0.33
WH-37.12-Prop	1660.39	10-year	5.53	2.53	255.63	255.79		255.8	0.005537	0.54	6.03	48.68	0.48
WH-37.12-Prop	1660.39	25-year	6.63	3.16	255.63	255.8		255.82	0.005712	0.6	6.95	50.47	0.5
WH-37.12-Prop	1660.39	50-year	7.44	3.64	255.63	255.82		255.83	0.005641	0.64	7.77	51.86	0.51
WH-37.12-Prop	1660.39	100-year	8.24	4.13	255.63	255.83		255.85	0.005498	0.67	8.5	52.27	0.51
WH-37.12-Prop	1660.39	Regional	17.68	11.29	255.63	255.99		256.02	0.004923	0.96	17.4	62.09	0.53
WH-37.12-Prop	1610.08	2-year	0.58	0.25	255.38	255.44		255.44	0.00639	0.19	1.22	30.57	0.39
WH-37.12-Prop	1610.08	5-year	1.02	0.45	255.38	255.46		255.47	0.005163	0.2	2.03	37.71	0.36
WH-37.12-Prop	1610.08	10-year	5.17	2.61	255.38	255.58		255.59	0.003248	0.43	8	57.7	0.37
WH-37.12-Prop	1610.08	25-year	6.21	3.27	255.38	255.61		255.61	0.002983	0.47	9.49	58.85	0.37
WH-37.12-Prop	1610.08	50-year	6.97	3.77	255.38	255.62		255.63	0.002914	0.49	10.47	60.04	0.37
WH-37.12-Prop	1610.08	100-year	7.73	4.29	255.38	255.64		255.65	0.002998	0.52	11.26	60.81	0.38
WH-37.12-Prop	1610.08	Regional	16.65	12	255.38	255.82		255.84	0.002456	0.74	23.12	65.93	0.38
WH-37.12-Prop	1559	2-year	0.53	0.25	255.06	255.24	255.19	255.25	0.003373	0.33	0.98	17.63	0.35
WH-37.12-Prop	1559	5-year	0.94	0.45	255.06	255.27	255.23	255.27	0.004012	0.42	1.43	19.98	0.4
WH-37.12-Prop	1559	10-year	4.88	2.61	255.06	255.41		255.43	0.00409	0.74	5.49	39.64	0.46
WH-37.12-Prop	1559	25-year	5.86	3.27	255.06	255.45		255.47	0.003909	0.78	6.89	41.68	0.46
WH-37.12-Prop	1559	50-year	6.59	3.77	255.06	255.46		255.48	0.00393	0.81	7.61	42.54	0.47
WH-37.12-Prop	1559	100-year	7.32	4.29	255.06	255.48		255.5	0.003976	0.85	8.33	43.1	0.48
WH-37.12-Prop	1559	Regional	15.8	12	255.06	255.67		255.7	0.004121	1.17	17.01	52.07	0.52
WH-37.12-Prop	1509	2-year	0.49	0.25	254.93	254.99	254.96	254.99	0.010973	0.29	0.78	13.57	0.53
WH-37.12-Prop	1509	5-year	0.88	0.45	254.93	255.02	254.98	255.03	0.007538	0.35	1.29	17.55	0.48
WH-37.12-Prop	1509	10-year	4.64	2.61	254.93	255.16	255.09	255.17	0.00817	0.71	4.69	33.28	0.6
WH-37.12-Prop	1509	25-year	5.57	3.27	254.93	255.18	255.1	255.2	0.008922	0.83	5.67	38.63	0.64
WH-37.12-Prop	1509	50-year	6.27	3.77	254.93	255.2	255.11	255.22	0.009247	0.89	6.16	39.29	0.66
WH-37.12-Prop	1509	100-year	6.97	4.29	254.93	255.21	255.12	255.23	0.009306	0.94	6.69	40	0.67
WH-37.12-Prop	1509	Regional	15.12	12	254.93	255.34	255.26	255.39	0.012173	1.49	12.1	44.81	0.83
WH-37.12-Prop	1459	2-year	0.47	0.25	254.55	254.72		254.73	0.005016	0.53	0.58	11.16	0.46
WH-37.12-Prop	1459	5-year	0.84	0.45	254.55	254.75	254.71	254.77	0.006559	0.69	1	19.43	0.54
WH-37.12-Prop	1459	10-year	4.45	2.61	254.55	254.88		254.9	0.006064	0.98	5.44	47.66	0.58
WH-37.12-Prop	1459	25-year	5.35	3.27	254.55	254.9		254.92	0.00604	1.03	6.52	50.43	0.58
WH-37.12-Prop	1459	50-year	6.02	3.77	254.55	254.92		254.94	0.005991	1.06	7.32	53.06	0.59
WH-37.12-Prop	1459	100-year	6.7	4.29	254.55	254.93		254.96	0.006111	1.1	8.07	54.42	0.6
WH-37.12-Prop	1459	Regional	14.59	12	254.55	255.11		255.14	0.004506	1.24	18.2	59.27	0.55
WH-37.12-Prop	1408.82	2-year	0.44	0.25	254.26	254.38		254.39	0.009795	0.54	0.55	7.55	0.59
WH-37.12-Prop	1408.82	5-year	0.79	0.45	254.26	254.43		254.44	0.006617	0.54	1.06	13.32	0.51
WH-37.12-Prop	1408.82	10-year	4.18	2.61	254.26	254.58		254.6	0.005883	0.87	5.32	38.74	0.55
WH-37.12-Prop	1408.82	25-year	5.02	3.27	254.26	254.61		254.63	0.005773	0.92	6.28	39.82	0.56
WH-37.12-Prop	1408.82	50-year	5.65	3.77	254.26	254.62		254.65	0.005655	0.95	6.98	40.59	0.56
WH-37.12-Prop	1408.82	100-year	6.29	4.29	254.26	254.64		254.67	0.00551	0.97	7.68	41.02	0.56
WH-37.12-Prop	1408.82	Regional	13.77	12	254.26	254.77		254.83	0.008187	1.5	13.24	43.24	0.72
WH-37.12-Prop	1358.5	2-year	0.42	0.25	253.8	254.02		254.03	0.006084	0.55	0.46	3.66	0.5
WH-37.12-Prop	1358.5	5-year	0.75	0.45	253.8	254.06		254.08	0.008491	0.73	0.61	4.38	0.61
WH-37.12-Prop	1358.5	10-year	3.97	2.61	253.8	254.21	254.21	254.26	0.009996	1.25	3.92	35.54	0.74
WH-37.12-Prop	1358.5	25-year	4.78	3.27	253.8	254.23	254.23	254.28	0.009887	1.3	4.71	35.88	0.74
WH-37.12-Prop	1358.5	50-year	5.39	3.77	253.8	254.24	254.24	254.3	0.011462	1.42	4.96	36.01	0.8
WH-37.12-Prop	1358.5	100-year	6.01	4.29	253.8	254.25	254.25	254.31	0.011603	1.47	5.45	36.36	0.81
WH-37.12-Prop	1358.5	Regional	13.17	12	253.8	254.46		254.51	0.006444	1.51	14.37	45.74	0.66
WH-37.12-Prop	1308.19	2-year	0.39	0.25	253.56	253.76		253.77	0.004739	0.47	0.54	4.69	0.44
WH-37.12-Prop	1308.19	5-year	0.7	0.45	253.56	253.82		253.83	0.003221	0.47	1.13	13.01	0.38
WH-37.12-Prop	1308.19	10-year	3.64	2.61	253.56	254.03		254.04	0.001317	0.53	8.76	44.27	0.28
WH-37.12-Prop	1308.19	25-year	4.38	3.27	253.56	254.07		254.08	0.001255	0.55	10.41	45.24	0.28
WH-37.12-Prop	1308.19	50-year	4.96	3.77	253.56	254.09		254.1	0.001275	0.57	11.42	45.81	0.28
WH-37.12-Prop	1308.19	100-year	5.54	4.29	253.56	254.12		254.12	0.001276	0.59	12.47	46.42	0.28
WH-37.12-Prop	1308.19	Regional	12.19	12	253.56	254.34		254.35	0.001548	0.85	23.01	49.48	0.33

Reach	River Sta	Profile	Volume	Q Total	Min Ch El	W.S. Elev	Crit W.S.	E.G. Elev	E.G. Slope	Vel Chnl	Flow Area	Top Width	Froude # Chl
			(1000 m3)	(m3/s)	(m)	(m)	(m)	(m)	(m/m)	(m/s)	(m2)	(m)	
WH-37.12-Prop	1257.87	2-year	0.36	0.47	253.18	253.47		253.49	0.005997	0.66	0.72	4.35	0.52
WH-37.12-Prop	1257.87	5-year	0.64	0.83	253.18	253.54		253.57	0.00699	0.8	1.04	5.32	0.57
WH-37.12-Prop	1257.87	10-year	3.15	4.42	253.18	253.74	253.74	253.82	0.009267	1.39	5.44	44.29	0.73
WH-37.12-Prop	1257.87	25-year	3.77	5.61	253.18	253.77	253.76	253.85	0.0099	1.51	6.77	53.9	0.77
WH-37.12-Prop	1257.87	50-year	4.25	6.48	253.18	253.8	253.8	253.87	0.00903	1.51	8.38	59.33	0.74
WH-37.12-Prop	1257.87	100-year	4.74	7.37	253.18	253.82	253.82	253.89	0.008798	1.53	9.53	68.07	0.74
WH-37.12-Prop	1257.87	Regional	10.57	20.72	253.18	253.96	253.94	254.05	0.010881	2.05	21.92	97.6	0.86
WH-37.12-Prop	1207.56	2-year	0.33	0.47	252.71	252.94	252.94	252.99	0.018679	1.02	0.46	3.42	0.89
WH-37.12-Prop	1207.56	5-year	0.6	0.83	252.71	253.01		253.08	0.014383	1.1	0.75	4.1	0.82
WH-37.12-Prop	1207.56	10-year	2.83	4.42	252.71	253.34	253.34	253.39	0.005489	1.26	7.2	57.66	0.59
WH-37.12-Prop	1207.56	25-year	3.41	5.61	252.71	253.35	253.35	253.42	0.007535	1.49	7.78	59.02	0.69
WH-37.12-Prop	1207.56	50-year	3.82	6.48	252.71	253.36	253.36	253.44	0.00824	1.59	8.54	65.41	0.73
WH-37.12-Prop	1207.56	100-year	4.24	7.37	252.71	253.39	253.39	253.46	0.007648	1.59	10.35	70.35	0.71
WH-37.12-Prop	1207.56	Regional	9.38	20.72	252.71	253.58		253.64	0.006175	1.76	24.81	81.17	0.67
WH-37.12-Prop	1157.24	2-year	0.3	0.47	252.16	252.45		252.48	0.005622	0.74	0.65	3.41	0.52
WH-37.12-Prop	1157.24	5-year	0.56	0.83	252.16	252.51		252.56	0.007482	1	0.88	4.64	0.62
WH-37.12-Prop	1157.24	10-year	2.52	4.42	252.16	252.79	252.78	252.9	0.009156	1.79	4.32	22.06	0.77
WH-37.12-Prop	1157.24	25-year	3.06	5.61	252.16	252.84	252.84	252.96	0.008997	1.89	5.82	31.33	0.78
WH-37.12-Prop	1157.24	50-year	3.43	6.48	252.16	252.9	252.9	252.99	0.006909	1.76	7.65	34.7	0.69
WH-37.12-Prop	1157.24	100-year	3.77	7.37	252.16	252.91	252.91	253.02	0.00789	1.9	8.11	35.72	0.74
WH-37.12-Prop	1157.24	Regional	8.32	20.72	252.16	253.14		253.27	0.009356	2.51	16.87	42.01	0.85
WH-37.12-Prop	1107	2-year	0.26	0.47	252	252.27		252.28	0.002672	0.4	1.2	9.14	0.34
WH-37.12-Prop	1107	5-year	0.49	0.83	252	252.32		252.33	0.002955	0.5	1.84	17.58	0.37
WH-37.12-Prop	1107	10-year	2.24	4.42	252	252.5		252.54	0.004767	1.01	6.17	29.97	0.53
WH-37.12-Prop	1107	25-year	2.7	5.61	252	252.55		252.59	0.004689	1.08	7.56	34.27	0.54
WH-37.12-Prop	1107	50-year	2.99	6.48	252	252.57		252.62	0.004632	1.12	8.55	35.99	0.54
WH-37.12-Prop	1107	100-year	3.29	7.37	252	252.6		252.65	0.004412	1.14	9.71	40.3	0.53
WH-37.12-Prop	1107	Regional	7.22	20.72	252	252.87		252.94	0.003919	1.46	22.99	50.81	0.54
WH-37.12-Prop	1057	2-year	0.2	0.47	251.83	252.05		252.06	0.007593	0.6	0.9	10.23	0.55
WH-37.12-Prop	1057	5-year	0.39	0.83	251.83	252.11		252.12	0.00562	0.63	1.87	22.66	0.5
WH-37.12-Prop	1057	10-year	1.92	4.42	251.83	252.31		252.34	0.003679	0.88	7.72	31.52	0.46
WH-37.12-Prop	1057	25-year	2.32	5.61	251.83	252.35		252.37	0.004088	0.98	8.76	32.05	0.5
WH-37.12-Prop	1057	50-year	2.57	6.48	251.83	252.37		252.4	0.0044	1.05	9.42	32.91	0.52
WH-37.12-Prop	1057	100-year	2.83	7.37	251.83	252.39		252.43	0.004874	1.15	10.11	35.89	0.55
WH-37.12-Prop	1057	Regional	6.21	20.72	251.83	252.61		252.7	0.006471	1.74	18.98	44.03	0.68
WH-37.12-Prop	1007	2-year	0.16	0.47	251.49	251.79		251.81	0.004023	0.56	0.84	5.06	0.43
WH-37.12-Prop	1007	5-year	0.33	0.83	251.49	251.85		251.88	0.004881	0.74	1.14	5.82	0.49
WH-37.12-Prop	1007	10-year	1.56	4.42	251.49	252.05	252.04	252.1	0.006534	1.3	6.71	47.3	0.63
WH-37.12-Prop	1007	25-year	1.88	5.61	251.49	252.09		252.14	0.005644	1.28	8.7	49.23	0.6
WH-37.12-Prop	1007	50-year	2.08	6.48	251.49	252.11		252.16	0.005267	1.29	10.05	52.4	0.58
WH-37.12-Prop	1007	100-year	2.28	7.37	251.49	252.14		252.18	0.005052	1.3	11.4	56.56	0.58
WH-37.12-Prop	1007	Regional	4.9	20.72	251.49	252.4		252.44	0.00352	1.43	28.63	71.47	0.52
WH-37.12-Prop	955.98	2-year	0.11	0.47	251.35	251.62		251.64	0.003103	0.51	1.08	14.28	0.38
WH-37.12-Prop	955.98	5-year	0.23	0.83	251.35	251.68		251.69	0.002523	0.55	2.5	32.86	0.36
WH-37.12-Prop	955.98	10-year	1.15	4.42	251.35	251.87		251.89	0.002705	0.84	9.34	39.48	0.41
WH-37.12-Prop	955.98	25-year	1.39	5.61	251.35	251.91		251.93	0.002806	0.9	10.84	39.89	0.42
WH-37.12-Prop	955.98	50-year	1.53	6.48	251.35	251.93		251.95	0.003001	0.96	11.67	40.11	0.44
WH-37.12-Prop	955.98	100-year	1.67	7.37	251.35	251.95		251.98	0.003053	1	12.72	41.14	0.45
WH-37.12-Prop	955.98	Regional	3.57	20.72	251.35	252.21		252.26	0.003685	1.45	24.16	47.22	0.53
WH-37.12-Prop	906	2-year	0.07	0.47	251.1	251.34	251.29	251.37	0.011675	0.83	0.56	3.95	0.7
WH-37.12-Prop	906	5-year	0.12	0.83	251.1	251.4	251.39	251.44	0.012195	0.9	1.12	16.16	0.73
WH-37.12-Prop	906	10-year	0.59	4.42	251.1	251.58	251.55	251.61	0.007287	1.16	6.91	42.65	0.64
WH-37.12-Prop	906	25-year	0.71	5.61	251.1	251.62	251.56	251.65	0.006294	1.16	8.61	43.46	0.61
WH-37.12-Prop	906	50-year	0.79	6.48	251.1	251.64	251.59	251.67	0.006195	1.19	9.56	43.88	0.61
WH-37.12-Prop	906	100-year	0.86	7.37	251.1	251.66	251.6	251.7	0.006003	1.22	10.55	44.23	0.6
WH-37.12-Prop	906	Regional	1.89	20.72	251.1	251.92	251.76	251.98	0.004628	1.49	23.04	49.6	0.58
WH-37.12-Prop	855.35	2-year	0.03	0.47	250.77	251.03		251.04	0.003977	0.59	0.94	8.2	0.43
WH-37.12-Prop	855.35	5-year	0.06	0.83	250.77	251.09		251.11	0.003785	0.67	1.67	13.13	0.44
WH-37.12-Prop	855.35	10-year	0.29	4.42	250.77	251.31		251.34	0.005126	1.08	6.72	30.03	0.55
WH-37.12-Prop	855.35	25-year	0.34	5.61	250.77	251.35		251.38	0.00513	1.15	7.96	32.03	0.56

Reach	River Sta	Profile	Volume	Q Total	Min Ch El	W.S. Elev	Crit W.S.	E.G. Elev	E.G. Slope	Vel Chnl	Flow Area	Top Width	Froude # Chl
			(1000 m3)	(m3/s)	(m)	(m)	(m)	(m)	(m/m)	(m/s)	(m2)	(m)	
WH-37.12-Prop	855.35	50-year	0.38	6.48	250.77	251.38		251.42	0.004968	1.18	8.92	32.91	0.56
WH-37.12-Prop	855.35	100-year	0.42	7.37	250.77	251.39		251.44	0.005704	1.29	9.31	33.19	0.6
WH-37.12-Prop	855.35	Regional	1.03	20.72	250.77	251.6		251.71	0.007931	1.95	16.96	37.31	0.75
WH-37.12-Prop	805.04	2-year		0.47	250.31	250.56	250.56	250.63	0.023394	1.21	0.39	2.57	1
WH-37.12-Prop	805.04	5-year		0.83	250.31	250.63	250.63	250.73	0.022189	1.39	0.6	3.09	1.01
WH-37.12-Prop	805.04	10-year		4.42	250.31	250.91	250.91	250.99	0.010763	1.55	5.02	31.99	0.79
WH-37.12-Prop	805.04	25-year		5.61	250.31	250.95	250.95	251.03	0.010653	1.64	6.19	33.32	0.8
WH-37.12-Prop	805.04	50-year		6.48	250.31	250.97	250.97	251.05	0.011135	1.72	6.79	33.72	0.82
WH-37.12-Prop	805.04	100-year		7.37	250.31	251		251.08	0.009085	1.64	8.14	36.09	0.75
WH-37.12-Prop	805.04	Regional		20.72	250.31	251.43		251.47	0.002778	1.38	25.57	44.82	0.46
1	751	2-year	0.91	0.9	249.78	250.35		250.35	0.006398	0.14	4.63	12.51	0.06
1	751	5-year	1.37	1.58	249.78	250.46		250.47	0.006711	0.16	6.16	14.08	0.07
1	751	10-year	5.57	8.54	249.78	250.89		250.92	0.008811	0.27	16.42	45.77	0.09
1	751	25-year	6.82	10.73	249.78	250.94		250.98	0.0082	0.27	19.16	47.22	0.08
1	751	50-year	7.79	12.52	249.78	250.99		251.02	0.00788	0.27	21.17	48.14	0.08
1	751	100-year	8.86	14.36	249.78	251.03		251.06	0.007721	0.28	23.33	50.22	0.08
1	751	Regional	19.79	37.6	249.78	251.42		251.47	0.00528	0.28	44.27	57.07	0.07
1	704.41	2-year	0.78	0.9	249.62	249.95		250	0.009401	0.97	0.93	4.37	0.67
1	704.41	5-year	1.2	1.58	249.62	250.06		250.12	0.008372	1.07	1.48	5.49	0.66
1	704.41	10-year	5	8.54	249.62	250.56		250.64	0.004379	1.38	8.39	30.81	0.55
1	704.41	25-year	6.12	10.73	249.62	250.65		250.73	0.003833	1.4	11.31	36.47	0.53
1	704.41	50-year	6.99	12.52	249.62	250.71		250.79	0.003463	1.41	13.73	39.81	0.51
1	704.41	100-year	7.96	14.36	249.62	250.77		250.84	0.003191	1.42	16.22	44.23	0.49
1	704.41	Regional	17.88	37.6	249.62	251.24		251.32	0.002253	1.61	38.96	50.96	0.45
1	654	2-year	0.73	0.9	249.32	249.71		249.74	0.003083	0.72	1.27	4.4	0.41
1	654	5-year	1.11	1.58	249.32	249.83		249.87	0.003137	0.9	1.84	5.22	0.44
1	654	10-year	4.61	8.54	249.32	250.26		250.4	0.0053	1.86	6.89	16.68	0.64
1	654	25-year	5.62	10.73	249.32	250.34		250.49	0.005404	1.99	8.34	18.89	0.65
1	654	50-year	6.4	12.52	249.32	250.4		250.56	0.005622	2.11	9.4	20.31	0.67
1	654	100-year	7.25	14.36	249.32	250.49	250.36	250.64	0.004905	2.08	11.49	27.26	0.64
1	654	Regional	16.28	37.6	249.32	250.84	250.82	251.11	0.007564	3.12	24.49	52.4	0.83
1	603.78	2-year	0.68	0.9	248.9	249.29	249.29	249.4	0.021615	1.46	0.62	2.89	1.01
1	603.78	5-year	1.04	1.58	248.9	249.4	249.4	249.53	0.02335	1.57	1.01	4.46	1.06
1	603.78	10-year	4.36	8.54	248.9	249.82	249.82	250.03	0.012397	2.08	4.78	13.58	0.9
1	603.78	25-year	5.33	10.73	248.9	249.89	249.89	250.12	0.01234	2.24	5.74	14.31	0.91
1	603.78	50-year	6.07	12.52	248.9	249.95	249.95	250.2	0.011585	2.32	6.64	15.44	0.9
1	603.78	100-year	6.87	14.36	248.9	249.97	249.97	250.27	0.014121	2.59	6.85	15.92	0.99
1	603.78	Regional	15.33	37.6	248.9	250.45	250.45	250.75	0.008999	2.94	21.16	41.15	0.87
1	554	2-year	0.63	0.9	248.63	248.98		248.99	0.002819	0.59	1.55	6.98	0.38
1	554	5-year	0.96	1.58	248.63	249.08		249.11	0.002527	0.71	2.41	9.85	0.38
1	554	10-year	3.93	8.54	248.63	249.56		249.61	0.001817	1.07	12.93	42.45	0.37
1	554	25-year	4.83	10.73	248.63	249.61		249.66	0.002264	1.24	14.94	48.39	0.42
1	554	50-year	5.51	12.52	248.63	249.65		249.71	0.002401	1.31	16.93	49.75	0.44
1	554	100-year	6.27	14.36	248.63	249.69		249.75	0.002493	1.38	18.92	51.35	0.45
1	554	Regional	14.03	37.6	248.63	250		250.1	0.003371	1.93	36.93	60.92	0.55
1	503.15	2-year	0.56	0.9	248.39	248.76		248.8	0.005769	0.85	1.07	4.3	0.54
1	503.15	5-year	0.86	1.58	248.39	248.87		248.92	0.006328	1.02	1.56	5.08	0.59
1	503.15	10-year	3.4	8.54	248.39	249.27	249.25	249.41	0.008409	1.78	6.79	40.06	0.75
1	503.15	25-year	4.16	10.73	248.39	249.36	249.36	249.47	0.006273	1.69	10.71	46.77	0.66
1	503.15	50-year	4.76	12.52	248.39	249.39	249.39	249.5	0.006577	1.78	12.09	47.25	0.68
1	503.15	100-year	5.45	14.36	248.39	249.41	249.41	249.54	0.006951	1.88	13.32	47.74	0.71
1	503.15	Regional	12.48	37.6	248.39	249.7		249.86	0.007024	2.37	27.8	52.06	0.75
1	453	2-year	0.51	0.9	248.1	248.37		248.42	0.010855	0.95	0.95	5.26	0.71
1	453	5-year	0.78	1.58	248.1	248.45		248.51	0.010564	1.16	1.4	6.77	0.74
1	453	10-year	3.06	8.54	248.1	248.88	248.88	249.03	0.007125	1.87	7.09	27.92	0.72
1	453	25-year	3.69	10.73	248.1	248.94	248.94	249.1	0.007318	2	8.8	30.83	0.74
1	453	50-year	4.21	12.52	248.1	249	248.99	249.15	0.006909	2.03	10.55	35.45	0.73
1	453	100-year	4.79	14.36	248.1	249.08	249.04	249.2	0.005221	1.89	13.86	45.9	0.64
1	453	Regional	10.89	37.6	248.1	249.55		249.63	0.002798	1.84	38.66	55.74	0.5

Reach	River Sta	Profile	Volume	Q Total	Min Ch El	W.S. Elev	Crit W.S.	E.G. Elev	E.G. Slope	Vel Chnl	Flow Area	Top Width	Froude # Chl
			(1000 m3)	(m3/s)	(m)	(m)	(m)	(m)	(m/m)	(m/s)	(m2)	(m)	
1	403	2-year	0.46	0.9	247.7	248.03		248.06	0.00493	0.74	1.23	5.74	0.5
1	403	5-year	0.7	1.58	247.7	248.13		248.17	0.004606	0.9	1.83	7.71	0.51
1	403	10-year	2.7	8.54	247.7	248.63		248.72	0.003428	1.46	8.12	16.79	0.51
1	403	25-year	3.27	10.73	247.7	248.68		248.8	0.004425	1.72	8.97	19.04	0.59
1	403	50-year	3.73	12.52	247.7	248.72		248.86	0.004956	1.88	9.85	20.99	0.63
1	403	100-year	4.21	14.36	247.7	248.76		248.93	0.005652	2.07	10.72	24.54	0.68
1	403	Regional	9.44	37.6	247.7	249.16	249.16	249.42	0.006847	2.87	24.23	42.95	0.79
1	353	2-year	0.4	0.9	247.4	247.73		247.77	0.006903	0.91	1	4.43	0.59
1	353	5-year	0.62	1.58	247.4	247.82		247.89	0.006861	1.13	1.46	5.38	0.62
1	353	10-year	2.34	8.54	247.4	248.28	248.28	248.46	0.007488	2.08	6.23	24.29	0.75
1	353	25-year	2.84	10.73	247.4	248.37	248.37	248.53	0.006256	2.06	8.77	27.99	0.7
1	353	50-year	3.26	12.52	247.4	248.42	248.42	248.58	0.006424	2.15	10.15	33.27	0.71
1	353	100-year	3.69	14.36	247.4	248.48	248.48	248.64	0.006054	2.18	12.44	37.88	0.7
1	353	Regional	8.3	37.6	247.4	248.81	248.79	249.02	0.007156	2.88	26.12	45.78	0.8
1	301.89	2-year	0.35	0.9	247.01	247.28		247.33	0.011277	1.04	0.87	4.31	0.73
1	301.89	5-year	0.54	1.58	247.01	247.39		247.45	0.010615	1.1	1.45	6.92	0.73
1	301.89	10-year	2.07	8.54	247.01	247.68	247.68	247.85	0.012841	2.01	5.6	16.89	0.91
1	301.89	25-year	2.51	10.73	247.01	247.74	247.74	247.93	0.012676	2.15	6.64	18.67	0.92
1	301.89	50-year	2.89	12.52	247.01	247.79	247.79	247.98	0.012472	2.25	7.53	20.41	0.92
1	301.89	100-year	3.25	14.36	247.01	247.84	247.84	248.04	0.011774	2.3	8.63	23.43	0.91
1	301.89	Regional	7.48	37.6	247.01	248.1	248.1	248.55	0.018658	3.64	16.59	38.77	1.21
1	251.57	2-year	0.28	0.9	246.49	246.82	246.78	246.85	0.00745	0.83	1.62	16.74	0.59
1	251.57	5-year	0.43	1.58	246.49	246.87	246.85	246.9	0.00921	0.97	2.5	20.4	0.67
1	251.57	10-year	1.55	8.54	246.49	247.15		247.2	0.005758	1.27	10.23	30.98	0.6
1	251.57	25-year	1.87	10.73	246.49	247.23		247.28	0.004447	1.25	12.88	31.56	0.54
1	251.57	50-year	2.15	12.52	246.49	247.3		247.35	0.003711	1.24	15.07	31.98	0.51
1	251.57	100-year	2.4	14.36	246.49	247.37		247.41	0.003269	1.24	17.13	32.29	0.48
1	251.57	Regional	5.68	37.6	246.49	247.97		248.03	0.001903	1.45	37.67	35.47	0.41
1	199	2-year	0.23	0.97	245.93	246.17	246.17	246.24	0.02364	1.15	0.85	6.31	1
1	199	5-year	0.35	1.71	245.93	246.25	246.23	246.33	0.016374	1.25	1.36	6.81	0.89
1	199	10-year	1.3	9.08	245.93	246.68	246.62	246.88	0.00936	2.03	4.93	10.51	0.81
1	199	25-year	1.56	11.43	245.93	246.76	246.73	247	0.009565	2.22	5.87	12.07	0.84
1	199	50-year	1.79	13.37	245.93	246.82	246.8	247.09	0.00998	2.39	6.55	13.09	0.87
1	199	100-year	2.01	15.33	245.93	246.88	246.86	247.17	0.009555	2.47	7.45	13.78	0.86
1	199	Regional	4.79	40.43	245.93	247.48	247.48	247.86	0.007535	3.13	18.95	24.8	0.83
1	191	2-year	0.22	0.97	245.61	246.13		246.15	0.002361	0.76	1.55	7.13	0.38
1	191	5-year	0.33	1.71	245.61	246.22	246.07	246.27	0.003014	0.99	2.33	8.61	0.44
1	191	10-year	1.23	9.08	245.61	246.66	246.54	246.8	0.005343	1.98	7.27	13.63	0.65
1	191	25-year	1.48	11.43	245.61	246.75	246.62	246.91	0.005659	2.17	8.52	14.5	0.68
1	191	50-year	1.71	13.37	245.61	246.81	246.69	246.99	0.006073	2.33	9.43	15.5	0.71
1	191	100-year	1.91	15.33	245.61	246.87	246.73	247.06	0.006318	2.46	10.39	16.42	0.73
1	191	Regional	4.56	40.43	245.61	247.43	247.32	247.73	0.007177	3.4	21.3	23.12	0.83
1	146	2-year	0.16	0.97	245.62	245.83	245.83	245.89	0.027833	1.09	0.89	8.2	1.05
1	146	5-year	0.24	1.71	245.62	245.89	245.89	245.96	0.022656	1.2	1.42	9.66	1
1	146	10-year	0.93	9.08	245.62	246.19	246.19	246.39	0.014847	2.01	4.78	12.8	0.97
1	146	25-year	1.12	11.43	245.62	246.25	246.25	246.49	0.014184	2.17	5.69	13.56	0.97
1	146	50-year	1.3	13.37	245.62	246.31	246.31	246.56	0.013228	2.25	6.5	14.24	0.95
1	146	100-year	1.46	15.33	245.62	246.36	246.36	246.63	0.012836	2.34	7.23	14.71	0.95
1	146	Regional	3.57	40.43	245.62	246.88	246.88	247.3	0.009855	3.08	16.47	22.35	0.92
1	119	2-year	0.12	0.97	244.95	245.35		245.36	0.001584	0.51	1.91	6.64	0.3
1	119	5-year	0.19	1.71	244.95	245.46		245.48	0.001785	0.66	2.65	7.17	0.33
1	119	10-year	0.76	9.08	244.95	245.97		246.06	0.002741	1.41	8.32	18.42	0.47
1	119	25-year	0.91	11.43	244.95	246.09		246.19	0.00268	1.51	10.77	26.15	0.47
1	119	50-year	1.06	13.37	244.95	246.15		246.26	0.002854	1.62	12.78	34.49	0.49
1	119	100-year	1.17	15.33	244.95	246.24		246.34	0.002522	1.6	15.91	38.26	0.47
1	119	Regional	2.87	40.43	244.95	246.74		246.85	0.00226	1.92	38.67	48.03	0.47
1	93	2-year	0.09	0.97	244.93	245.21	245.18	245.28	0.011651	1.12	0.92	5.92	0.75
1	93	5-year	0.14	1.71	244.93	245.3	245.28	245.38	0.010934	1.34	1.52	7.7	0.77
1	93	10-year	0.62	9.08	244.93	245.67	245.67	245.93	0.013448	2.51	4.78	9.8	0.97
1	93	25-year	0.74	11.43	244.93	245.76	245.76	246.05	0.013297	2.71	5.69	11.07	0.98

Reach	River Sta	Profile	Volume	Q Total	Min Ch El	W.S. Elev	Crit W.S.	E.G. Elev	E.G. Slope	Vel Chnl	Flow Area	Top Width	Froude # Chl
			(1000 m3)	(m3/s)	(m)	(m)	(m)	(m)	(m/m)	(m/s)	(m2)	(m)	
1	93	50-year	0.85	13.37	244.93	245.87	245.87	246.14	0.010848	2.67	7.13	16.35	0.91
1	93	100-year	0.93	15.33	244.93	245.9	245.9	246.21	0.012168	2.9	7.7	17.1	0.97
1	93	Regional	2.29	40.43	244.93	246.51	246.51	246.76	0.007042	3.1	26.86	44.47	0.8
1	50.31	2-year	0.05	0.97	244.35	244.63	244.62	244.69	0.016101	1.14	0.86	4.8	0.85
1	50.31	5-year	0.07	1.71	244.35	244.7	244.69	244.8	0.016636	1.37	1.33	8.15	0.9
1	50.31	10-year	0.3	9.08	244.35	245.02	245	245.14	0.011925	1.8	6.87	21.58	0.86
1	50.31	25-year	0.35	11.43	244.35	245.08		245.22	0.011172	1.9	8.22	22.13	0.85
1	50.31	50-year	0.39	13.37	244.35	245.13		245.27	0.010883	1.98	9.23	22.6	0.85
1	50.31	100-year	0.43	15.33	244.35	245.16	245.12	245.32	0.01158	2.12	9.92	23.2	0.88
1	50.31	Regional	0.9	40.43	244.35	245.48	245.48	245.81	0.014095	3.14	19.25	33.98	1.05
1	0	2-year		0.97	243.72	243.92	243.89	243.97	0.012994	0.92	1.05	6.85	0.75
1	0	5-year		1.71	243.72	243.99	243.95	244.05	0.012989	1.13	1.51	7.21	0.79
1	0	10-year		9.08	243.72	244.34	244.31	244.51	0.012994	1.82	5	13.51	0.89
1	0	25-year		11.43	243.72	244.41	244.39	244.61	0.012997	1.98	5.98	16.75	0.91
1	0	50-year		13.37	243.72	244.45	244.45	244.67	0.012925	2.09	6.82	19.67	0.92
1	0	100-year		15.33	243.72	244.51	244.51	244.73	0.011817	2.14	7.94	21.38	0.89
1	0	Regional		40.43	243.72	244.94	244.94	245.25	0.009129	2.71	20.5	37.82	0.86