TOWN OF CALEDON
PLANNING
RECEIVED
Nov 26, 2021

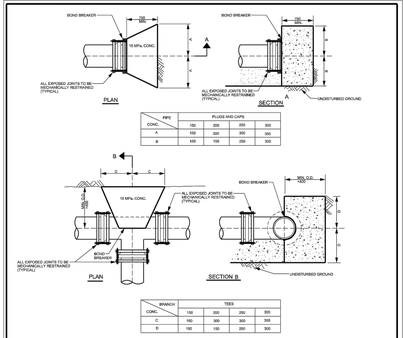

NOTE

1. BLOCKING IS NOT PERMITTED ON NEW INSTALLATIONS.
2. PIPE GREATER THAN 300mm REQUIRES MECHANICAL RESTRAINTS WITH SHOP DRAWING SUBMISSION.
3. ASSUME BEARING AT 19kPa (CLEAN DRY SAND, FAIRLY DRY ETC.).
4. FOR POOR CONDITIONS (SOFT CLAY) LARGER BLOCKING MY BE REQUIRED.
5. ALL CONCRETE TO BE 15MPa.
6. BASED ON WATER TEST PRESSURE OF 1000kPa.
7. ALL DIMENSIONS ARE IN MILLIMETRES.

Region of Peel Working for you	PUBLIC WORKS STANDARD DRAWING	REV. DATE: NOVEMBER 2011	
HORIZONTAL BLOCKING PLUGS, CAPS AND TEES FOR CONNECTION TO EXISTING WATERMAIN ONLY		APPROVED BY: A.P.	DRAWN BY: ASHLEY GROUP
		STD. DWG. NUMBER: 1-5-7	SCALE: N.T.S.

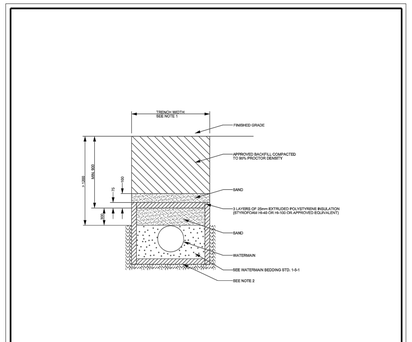

NOTE

1. MINIMUM TRENCH WIDTH TO BE O.D. PLUS 600mm. MAX TRENCH WIDTH TO BE O.D. PLUS 750mm.
2. INSULATING THE BOTTOM OF THE TRENCH MAY BE REQUIRED UNDER CERTAIN CIRCUMSTANCES (i.e. OVER A CULVERT).

Region of Peel Working for you	PUBLIC WORKS STANDARD DRAWING	REV. DATE: NOVEMBER 2011	
WATERMAIN INSULATION DETAILS		APPROVED BY: A.P.	DRAWN BY: ASHLEY GROUP
		STD. DWG. NUMBER: 1-5-8	SCALE: N.T.S.

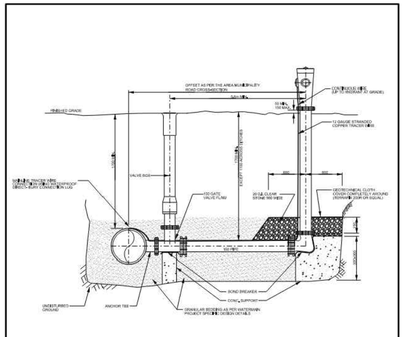

NOTE

1. IF THE WATERMAIN IS NOT AT THE STANDARD OFFSET, THE LOCATION OF THE HYDRANT TO BE AS PER CONSTRUCTION DRAWINGS.
2. BACKFILL TRENCH WITH GRANULAR 'B' COMPACTED TO 100% STD. PROCTOR DENSITY.
3. MECHANICAL RESTRAINTS REQUIRED ON ALL PVC HYDRANT LATERALS INCLUDING VALVES AND FITTINGS AS PER REGION STANDARD DRAWING 1-5-4.
4. ALL PIPE, FITTINGS, VALVES, APPURTENANCES AND MECHANICAL RESTRAINTS TO BE PROTECTED WITH 3 PART CORROSION PREVENTION SYSTEM, APPLIED TO MANUFACTURER'S RECOMMENDATIONS.

Region of Peel Working with you	PUBLIC WORKS STANDARD DRAWING	REV. DATE: MARCH 2018	
HYDRANT SETTING FOR D.I. OR P.V.C. PIPE		APPROVED BY: E.O.	DRAWN BY: ASHLEY GROUP
		STD. DWG. NUMBER: 1-6-1	SCALE: N.T.S.

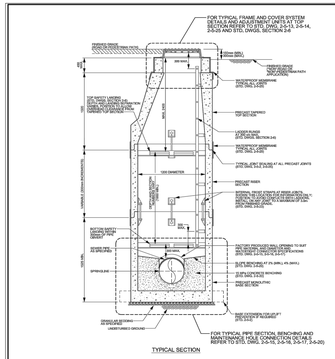

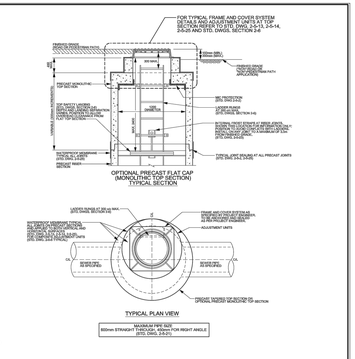

NOTE

1. REFER TO STANDARD DRAWING 2-5-1 FOR GENERAL NOTES PERTAINING TO PRECAST MAINTENANCE HOLES.
2. REFER TO STANDARD DRAWING 2-5-2 FOR TYPICAL INSTALLATION OPTIONS AND REQUIREMENTS.

Region of Peel Working for you	PUBLIC WORKS STANDARD DRAWING	REV. DATE: MARCH 2017	
NEW SANITARY SEWER CONSTRUCTION TYPICAL 1200mm DIAMETER PRECAST CIRCULAR MAINTENANCE HOLE DETAILS		APPROVED BY: A.P.	DRAWN BY: ASHLEY GROUP
		STD. DWG. NUMBER: 2-5-3	SCALE: N.T.S.

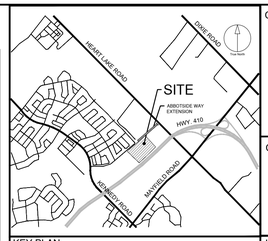

KEY PLAN

CLIENT

BROCCOLINI

2680 SKYMARK AVENUE, SUITE 800
MISSISSAUGA, ON. L4W5L6

COPYRIGHT

This drawing has been prepared solely for the intended use, thus any reproduction or distribution for any purpose other than authorized by IBI Group is Forbidden. Written dimensions shall have precedence over scaled dimensions. Contractor shall verify and take responsibility for all dimensions and conditions on the job, and IBI Group shall be informed of any variations from the dimensions and conditions shown on the drawing. Shop drawings shall be submitted to IBI Group for general conformance before proceeding with fabrication.

IBI Group Professional Services (Canada) Inc.
is a member of the IBI Group of companies

ISSUES

No.	DESCRIPTION	DATE
1	ISSUED FOR SPA SUBMISSION	NOV 15, 2021

LEGEND

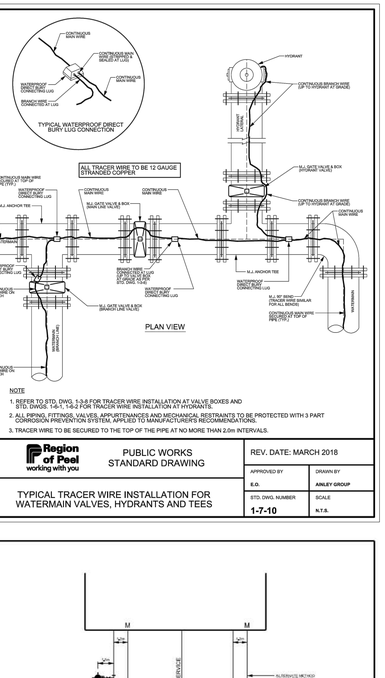

NOTE

1. REFER TO STD. DWG. 1-3-8 FOR TRACER WIRE INSTALLATION AT VALVE BOXES AND STD. DWGS. 1-5-1, 1-6-2 FOR TRACER WIRE INSTALLATION AT HYDRANTS.
2. ALL PIPING, FITTINGS, VALVES, APPURTENANCES AND MECHANICAL RESTRAINTS TO BE PROTECTED WITH 3 PART CORROSION PREVENTION SYSTEM, APPLIED TO MANUFACTURERS RECOMMENDATIONS.
3. TRACER WIRE TO BE SECURED TO THE TOP OF THE PIPE AT NO MORE THAN 2.0m INTERVALS.

Region of Peel Working for you	PUBLIC WORKS STANDARD DRAWING	REV. DATE: MARCH 2018	
TYPICAL TRACER WIRE INSTALLATION FOR WATERMAIN VALVES, HYDRANTS AND TEES		APPROVED BY: E.O.	DRAWN BY: ASHLEY GROUP
		STD. DWG. NUMBER: 1-7-10	SCALE: N.T.S.

GENERAL REFERENCES FOR DRAWINGS:

REGION OF PEEL STANDARD DRAWINGS DELETED - MARCH 2017 REVISION:

DRAWING NUMBER	DRAWING TITLE	DATE DELETED	REPLACED WITH NEW REGION OF PEEL STANDARD DRAWING	REPLACED WITH OPSD
2-1-1	PRECAST MAINTENANCE HOLE 1200mm DIAMETER	MAY 2013	2-5-3	
2-1-2	PRECAST MAINTENANCE HOLE 1800mm AND 1800mm DIAMETER	MAY 2014	2-5-4, 2-5-5	
2-1-3	PRECAST MAINTENANCE HOLE TEES	MAY 2014	2-7-4, 2-7-7, 2-7-8	
2-1-4	MAINTENANCE HOLE BENCHING DETAILS	MAY 2009	2-5-20	
2-1-5	MAINTENANCE HOLE DROP STRUCTURE (EXTERNAL ASSEMBLY)	MAY 2009	2-5-26	
2-1-6	MAINTENANCE HOLE DROP STRUCTURE (INTERNAL ASSEMBLY)	SEPT. 2006	2-5-27	
2-1-7	MAINTENANCE HOLE VENTING DETAILS	MAY 2009	2-5-22	
2-2-1	SAFETY PLATFORM FOR 1200mm DIAMETER PRECAST M.H.	DEC. 2013	2-6-13, 2-6-14	
2-2-2	STANDARD HEAVY DUTY FRAME AND COVER	MAY 2009	2-6-1, 2-6-2, 2-6-3, 2-6-4	
2-2-18	DETAIL OF ANCHORING METHOD FOR WATER TIGHT M.H.	MAY 2009	2-6-8	
2-2-19	DETAIL OF ANCHORING METHOD FOR WATER TIGHT M.H.	MAY 2009	2-6-7	
2-2-4	STANDARD MAINTENANCE HOLE STEPS ALUMINUM	MAY 2009	2-6-11	

ONTARIO PROVINCIAL STANDARD DRAWING REFERENCES TO BE READ IN CONJUNCTION WITH REGION OF PEEL STANDARD DRAWINGS - MARCH 2017 REVISION

DRAWING NUMBER	DRAWING TITLE
404.020	ALUMINUM SAFETY PLATFORM FOR CIRCULAR MAINTENANCE HOLES
404.021	ALUMINUM SAFETY PLATFORM FOR 1800mm CIRCULAR MAINTENANCE HOLES WITH DROP PIPE
406.010	MAINTENANCE HOLE STEPS SPECIAL
406.010	ALUMINUM LADDER FOR MAINTENANCE HOLES
701.021	MAINTENANCE HOLE BENCHING AND PIPE OPENING ALTERNATIVES
1003.010	CAST-IN-PLACE MAINTENANCE HOLE DROP STRUCTURE TEE
1003.020	CAST-IN-PLACE MAINTENANCE HOLE DROP STRUCTURE WYE
1003.030	INTERNAL DROP STRUCTURE FOR EXISTING MAINTENANCE HOLES

NOTE: THIS LIST INCLUDES OPSD REFERENCES THAT APPLY DIRECTLY TO THE NEW AND REVISED REGION OF PEEL STANDARD DRAWINGS, BUT IT DOES NOT PRECLUDE THE APPROVED USE OF ANY APPLICABLE OPSD REFERENCES NOT LISTED ABOVE.

GENERAL NOTES FOR PRECAST CONCRETE MAINTENANCE HOLES AND CHAMBERS:

1. ALL PRECAST CHAMBERS TO BE SUPPLIED BY A MANUFACTURER CERTIFIED UNDER THE OCPA PLANT PREQUALIFICATION PROGRAM.
2. SUBMIT SHOP DRAWINGS TO THE CONTRACT ADMINISTRATOR FOR INFORMATION. ALL DRAWINGS SHALL BEAR THE SIGNATURE AND SEAL OF A PROFESSIONAL ENGINEER LICENSED TO PRACTISE IN ONTARIO.
3. THE MANUFACTURER SHALL PROVIDE LETTERS SIGNED BY A PROFESSIONAL ENGINEER CERTIFYING THE FOLLOWING:
   i) THAT THE DESIGN OF THE PRECAST UNITS MEETS THE REQUIREMENTS OF THE SPECIFICATIONS
   ii) THAT THE PRECAST UNITS HAVE BEEN MANUFACTURED AS PER DESIGN AND INSPECTED IN ACCORDANCE WITH THE PLANT PREQUALIFICATION PROGRAM
4. PROVIDE CONCRETE WITH MINIMUM STRENGTH OF 35 MPa UNLESS A HIGHER STRENGTH IS REQUIRED BY THE MANUFACTURER OR DESIGNER.
5. REINFORCING STEEL SHALL BE IN ACCORDANCE WITH CSA G30.18 WITH A MINIMUM YIELD STRENGTH OF Fy=400 MPa.
6. IF CHAMBER (PRE-EXISTING) IS ANY OTHER CONFIGURATION OTHER THAN ROUND, THE CONTRACTOR SHALL FIRST CAST-IN-PLACE SQUARE TO ROUND TRANSITION TO MATCH SPECIFICATIONS AND REQUIREMENTS OF REHABILITATION PRODUCTS BEING UTILIZED. CAST-IN-PLACE TRANSITION MUST BE ENGINEERED AND STAMPED AND PROVIDED WITH A WATERTIGHT CONNECTION BETWEEN EXISTING AND NEW SECTION.
7. REFER TO STANDARD DRAWINGS IN SECTIONS 2-5 AND 2-6, AND ONTARIO PROVINCIAL STANDARD DRAWINGS FOR ADDITIONAL REQUIREMENTS FOR WATERPROOFING, JOINT SEALING, ADJUSTMENT UNITS, FRAME & COVERS, CHAMBER STEPS AND LADDERS AND FROST BYPASS.
8. ALL PRECAST COMPONENTS SHALL BE DESIGNED AND MANUFACTURED TO CSA STANDARD A23.3 AND CSA STANDARD A23.4. ADDITIONALLY, ALL PRECAST CHAMBERS, CONNECTIONS TO PIPE, SHALL ALSO MEET THE REQUIREMENTS OF CSA STANDARD S6 (CANADIAN HIGHWAY BRIDGE CODE).

GENERAL NOTES FOR PIPING:

1. SUBMIT CONCRETE PRESSURE PIPE SHOP DRAWINGS TO THE CONTRACT ADMINISTRATOR FOR INFORMATION. ALL DRAWINGS SHALL BEAR THE SIGNATURE AND SEAL OF A PROFESSIONAL ENGINEER LICENSED TO PRACTISE IN ONTARIO.
2. REFER TO STANDARD DRAWING 2-5-21 FOR MAXIMUM PIPE SIZES IN PRECAST MAINTENANCE HOLES OR CHAMBERS.

Region of Peel Working for you	PUBLIC WORKS STANDARD DRAWING	REV. DATE: MARCH 2017	
GENERAL NOTES AND REFERENCES		APPROVED BY: A.P.	DRAWN BY: ASHLEY GROUP
		STD. DWG. NUMBER: 2-0-1	SCALE: N.T.S.

GENERAL NOTES FOR PRECAST CIRCULAR OR RECTANGULAR MAINTENANCE HOLES:

1. PRECAST MAINTENANCE HOLES TO BE SUPPLIED BY A MANUFACTURER CERTIFIED UNDER THE OCPA PLANT PREQUALIFICATION PROGRAM (STD. DWGS. 2-5-1).
2. PROVIDE MONOLITHIC BASE SECTIONS FOR ALL MAINTANANCE HOLES UNLESS ALTERNATE APPROVED AND SPECIFIED ON PROJECT SPECIFIC REQUIREMENTS.
3. USE ALTERNATIVE BASE, TOP, PIPE SUPPORT OR CONNECTORS, STEPS, FRAME AND COVER AND/OR BENCHING ONLY WHERE APPROVED AND SPECIFIED ON PROJECT SPECIFIC REQUIREMENTS.
4. PROVIDE BASE EXTENSIONS FOR UPLIFT PREVENTION ON PRECAST MAINTENANCE HOLES 1200mm DIAMETER OR GREATER WHERE REQUIRED. REFER TO CONTRACT DRAWINGS AND SPECIFICATIONS AND GEOTECHNICAL REPORT FOR PROJECT SPECIFIC REQUIREMENTS.
5. SPECIAL BASE DESIGN REQUIRED FOR DEPTHS GREATER THAN 8.0 m.
6. FOR 1500mm DIAMETER AND LARGER SEWERS, PRECAST MAINTENANCE HOLE TEES ARE ACCEPTABLE (STD. DWGS. SECTION 2-7).
7. APPROVED ADJUSTMENT UNITS AND APPROVED FRAME AND COVER SYSTEMS TO BE INSTALLED AS PER MANUFACTURER'S INSTRUCTIONS (STD. DWGS. SECTION 2-6).
8. FILL LIFTING HOLES WITH 13 NON-SHRINK MORTAR MIX.
9. FROST STRAPS SHALL BE INSTALLED AT ALL RISER, TOP AND BASE SECTION JOINTS ON ALL PRECAST MAINTENANCE HOLES TO A MAXIMUM DEPTH OF 3.0m FROM FINISHED GRADE. INTERNAL FROST STRAPS SHALL BE INSTALLED ON ALL PRECAST MAINTENANCE HOLES WITH CONNECTIONS TO EXISTING SEWERS. CONTACT ENGINEER FOR ADDITIONAL COROSION PROTECTION REQUIRED AS PER MANUFACTURER'S RECOMMENDATIONS.
10. VENT PIPES SHALL BE REQUIRED AT EVERY THIRD MAINTENANCE HOLE ON SECTIONS OF SANITARY SEWERS WITH WATERTIGHT COVERS IN EASEMENTS, INSTALLATIONS WITHIN FLOOD PLAINS OR AREAS WITH HIGH LEVELS OF HYDROGEN SULFIDE. REFER TO PROJECT SPECIFIC REQUIREMENTS (STD. DWG. 2-5-22).
11. WATERPROOF MEMBRANE SHALL BE APPLIED EXTERNALLY AROUND ALL RISER, GRADE ADJUSTMENT UNITS,TOP AND BASE SECTION JOINTS ON ALL MAINTENANCE HOLES. WATERPROOF MEMBRANE TO BE "MEL-ROL" BY W.R. MEADOWS OF MILTON ONTARIO OR APPROVED EQUAL. EXTEND COMPLETELY AROUND ALL RISER SECTION JOINTS WITH A MINIMUM 300mm WIDE STRIP OF MEMBRANE CENTERED ON THE JOINT. PROVIDE 300mm WIDE STRIP OF MEL-ROL FABRIC OR EQUAL OVER APPROVED EQUAL (STD. DWG. 2-5-2, 2-5-25). APPLY DETAIL STRIP ON ALL RISER OR OUTSIDE CORNER JOINTS BENEATH WATERPROOF MEMBRANE. CW PRIMER AND SURFACE PREPARATION AS PER MANUFACTURER'S SPECIFICATIONS. DETAIL STRIP TO BE "MEL-ROL DETAIL STRIP" BY W.R. MEADOWS OF MILTON ONTARIO OR APPROVED EQUAL (STD. DWG. 2-5-25).
12. FRP SAFETY PLATFORMS BY ACCESS INDUSTRIAL OF MISSISSAUGA ONTARIO, OR ALUMINUM SAFETY PLATFORMS, WHERE REQUIRED, TO BE INSTALLED IN MAINTENANCE HOLES 1200mm DIAMETER OR GREATER (STD DWGS. SECTION 2-6). PLATFORMS TO BE ANCHORED USING 316 SS HILTI KWIK BOLTS OR ENGINEER APPROVED EQUAL.
13. FRP LADDERS BY ACCESS INDUSTRIAL OF MISSISSAUGA ONTARIO, OR ALUMINUM LADDERS, TO BE INSTALLED IN ALL MAINTENANCE HOLES 1200mm DIAMETER OR GREATER (STD DWGS. SECTION 2-5). LADDERS TO BE ANCHORED USING 316 SS HILTI KWIK BOLTS OR ENGINEER APPROVED EQUAL.
14. BENCHING TO BE CONSTRUCTED TO THE OBVERT OF THE PIPE IN ALL CASES. 15MPa CONCRETE UNLESS OTHERWISE SPECIFIED ON PROJECT SPECIFIC DRAWING AS PER OPSS PROV 1350, MATERIAL SPECIFICATION FOR CONCRETE MATERIALS AND PRODUCTION.
15. FOR PVC PIPE (SEE NOTE 19), USE A FLEXIBLE WATERTIGHT CONNECTOR WITH GRANULAR BEDDING (STD. DWG. 2-5-15).
16. FOR RIGID PIPE (SEE NOTE 19), SUPPORT FROM MAINTENANCE HOLE TO FIRST JOINT WITH MIN. 20 MPa. CONCRETE CRADLE (STD. DWG 2-5-16).
17. IF MONOLITHIC RISER OR PRECAST RISER SECTIONS ARE USED, THEN THE LADDER (OR FIRST STEP) CAN BE ANCHORED INTO THE SECTION TO MEET THE MAX. 300mm DISTANCE FROM SURFACE. IF COMPOSITE SECTIONS ARE USED, THEN FRP LADDER MUST ANCHOR INTO TOP OF CONE OR TOP OF BARREL SECTION AND EXTEND TO WITHIN 300mm OF SURFACE.
18. ALL CHAMBERS LOCATED OUTSIDE OF R.O.W. OR WITHIN PARK SETTINGS MUST HAVE A 1500mm HIGH SANITARY CHAMBER. MARKING POST (GREEN IN COLOUR), WITHIN 600mm OF CHAMBER COVER (STD. DWG. 2-5-24). MARKERS SHALL NOT BE INSTALLED IF ERECTION RESULTS IN AN IMPEDIMENT TO PEDESTRIAN OR VEHICULAR TRAFFIC. NOT INCLUSIVE OF MAINTENANCE EQUIPMENT.
19. FOR CONNECTION OF FLEXIBLE OR RIGID PIPE TO SANITARY CHAMBERS, A FLEXIBLE WATERIGHT RUBBER CONNECTOR SHALL BE USED. THE CONNECTOR DESIGN TO MATCH SPECIFIC PIPE MATERIAL AND DIAMETER. CONNECTOR SHALL BE FACTORY CAST WHERE POSSIBLE. CONNECTOR MAY BE INSTALLED IN A FACTORY PRODUCED OPENING THAT MEETS CONNECTOR MANUFACTURER'S RECOMMENDATIONS. ALTERNATE CONNECTORS MAY BE CONSIDERED IF PROVIDED IN CONJUNCTION WITH FLEXIBLE RUBBER BOOT TO FACILITATE GROUTING OF ANNULAR SPACE IN/BETWEEN CHAMBER (STD. DWG. 2-5-1, 2-5-15, 2-5-17)
20. ALL INTERNAL HORIZONTAL SURFACES ON UNDERSIDE OF PRECAST FLAT CAPS OR TRANSITION SECTIONS TO BE PROVIDED WITH MIC PROTECTION (CEMAQUTE FLEX OR OR APPROVED EQUAL).
21. ALL CHAMBERS LOCATED OUTSIDE OF R.O.W. OR WITHIN PARK SETTINGS SHALL BE CONSTRUCTED SO THAT COVER SURFACE IS 100mm (MIN.) ABOVE FINISHED GRADE UNLESS OTHERWISE APPROVED BY PROJECT ENGINEER, OR IF THIS CREATES AN IMPEDIMENT TO PEDESTRIAN OR VEHICULAR TRAFFIC, NOT INCLUSIVE OF MAINTENANCE EQUIPMENT.

NOTE

1. GENERAL NOTES TO BE READ IN CONJUNCTION WITH ALL STANDARD DRAWINGS PERTAINING TO PRECAST CIRCULAR MAINTENANCE HOLES.

Region of Peel Working for you	PUBLIC WORKS STANDARD DRAWING	REV. DATE: MARCH 2017	
NEW SANITARY SEWER CONSTRUCTION GENERAL NOTES FOR PRECAST MAINTENANCE HOLES		APPROVED BY: A.P.	DRAWN BY: ASHLEY GROUP
		STD. DWG. NUMBER: 2-5-1	SCALE: N.T.S.

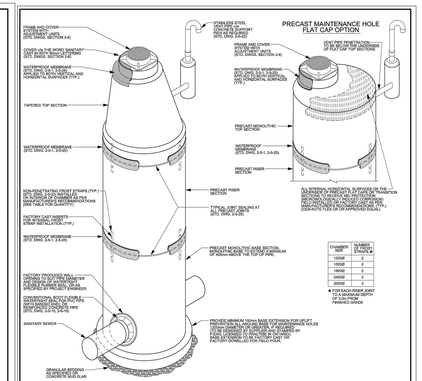

NOTE

1. REFER TO STANDARD DRAWING 2-5-1 FOR GENERAL NOTES PERTAINING TO PRECAST MAINTENANCE HOLES.

Region of Peel Working for you	PUBLIC WORKS STANDARD DRAWING	REV. DATE: MARCH 2017	
NEW SANITARY SEWER CONSTRUCTION TYPICAL PRECAST CIRCULAR MAINTENANCE HOLE DETAILS (1200mm - 3000mm)		APPROVED BY: A.P.	DRAWN BY: ASHLEY GROUP
		STD. DWG. NUMBER: 2-5-2	SCALE: N.T.S.

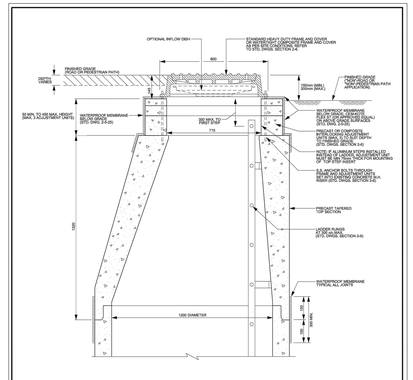

NOTE

1. REFER TO STANDARD DRAWING 2-5-1 FOR GENERAL NOTES PERTAINING TO PRECAST MAINTENANCE HOLES.
2. REFER TO STANDARD DRAWING 2-5-2, 2-5-9 FOR TYPICAL INSTALLATION OPTIONS AND REQUIREMENTS.

NEW CONSTRUCTION		REHABILITATION	
FULL EXCAVATION	TRENCH EXCAVATION	NO EXCAVATION	
INTERNAL		EXTERNAL	
BOW	FLOOD PLAIN	EASEMENT	
IB	ABB	SECURITY	

Region of Peel Working for you	PUBLIC WORKS STANDARD DRAWING	REV. DATE: MARCH 2017	
NEW SANITARY SEWER CONSTRUCTION STANDARD FRAME AND COVER SYSTEM DETAILS		APPROVED BY: A.P.	DRAWN BY: ASHLEY GROUP
		STD. DWG. NUMBER: 2-5-13	SCALE: N.T.S.

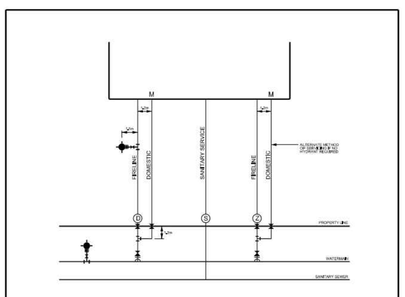

LEGEND

H	VALVE & BOX		FIRE HYDRANT C/W VALVE & BOX
D	DETECTOR CHECK VALVE IN CHAMBER		DIRECTION OF PUMPER NOZZLE
F	CHECK VALVE IN CHAMBER	M	METER IN CHAMBER
	TAPPING SLEEVE & VALVE & BOX	M	METER
	TEE	S	SAMPLING SANITARY MAINTENANCE HOLE

Region of Peel Working for you	PUBLIC WORKS STANDARD DRAWING	REV. DATE: NOVEMBER 2011	
SERVICING FOR INDUSTRIAL BUILDINGS		APPROVED BY: A.P.	DRAWN BY: ASHLEY GROUP
		STD. DWG. NUMBER: 1-8-6	SCALE: N.T.S.

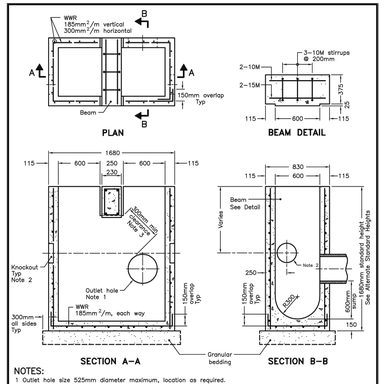

NOTES:

1 Outlet hole size 525mm diameter maximum, location as required.
2 200mm diameter knockout to accommodate subdrain. Knockout shall be 60mm deep.
3 Minimum clearance between beam recess and hole for pipe shall be 300mm or minimum clearance can be 150mm with addition of two 15M size rebar on 45 degree diagonal.
A Centre reinforcing in base slab and walls ±20mm.
B Granular backfill shall be placed to a minimum thickness of 300mm all around the catch basin.
C Frame, grate, and adjustment units shall be installed according to OPSD 704.010.
D Pipe support shall be according to OPSD 708.020.
E All dimensions are nominal.
F All dimensions are in millimetres unless otherwise shown.

ALTERNATE STANDARD HEIGHTS	
ALTERNATIVE	DIMENSION
A	1980
B	1830
C	1680

ONTARIO PROVINCIAL STANDARD DRAWING	Nov 2014	Rev 3
PRECAST CONCRETE TWIN INLET CATCH BASIN 600 x 1450mm	OPSD 705.020	

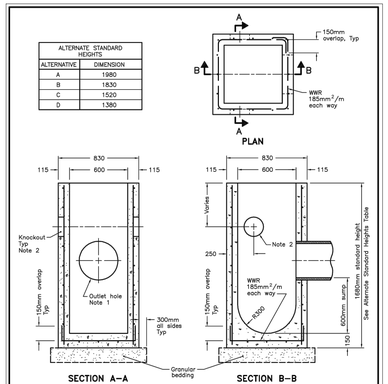

ALTERNATE STANDARD HEIGHTS	
ALTERNATIVE	DIMENSION
A	1980
B	1830
C	1520
D	1380

NOTES:

1 Outlet hole size 525mm diameter maximum, location as required.
2 200mm diameter knockout to accommodate subdrain. Knockout shall be 60mm deep.
A Centre reinforcing in base slab and walls ±20mm.
B Granular backfill shall be placed to a minimum thickness of 300mm all around the catch basin.
C Frame, grate, and adjustment units shall be installed according to OPSD 704.010.
D Pipe support shall be according to OPSD 708.020.
E All dimensions are nominal.
F All dimensions are in millimetres unless otherwise shown.

ONTARIO PROVINCIAL STANDARD DRAWING	Nov 2014	Rev 3
PRECAST CONCRETE CATCH BASIN 600x600mm	OPSD 705.010	

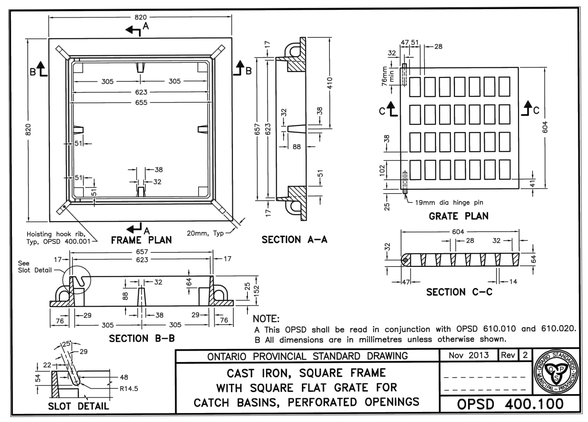

NOTE:
A This OPSD shall be read in conjunction with OPSD 610.010 and 610.020.
B All dimensions are in millimetres unless otherwise shown.

ONTARIO PROVINCIAL STANDARD DRAWING	Nov 2013	Rev 2
CAST IRON, SQUARE FRAME WITH SQUARE FLAT GRATE FOR CATCH BASINS, PERFORATED OPENINGS	OPSD 400.100	

LIST OF DRAWINGS

SG-01 - SITE GRADING PLAN
SG-02 - SITE GRADING PLAN
SG-03 - SITE GRADING PLAN
SG-04 - SITE GRADING PLAN
SS-01 - SITE SERVICING PLAN
SS-02 - SITE SERVICING PLAN
SS-03 - SITE SERVICING PLAN
SS-04 - SITE SERVICING PLAN
EC-01 - EROSION AND SEDIMENT CONTROL PLAN
EC-02 - EROSION AND SEDIMENT CONTROL PLAN
EC-03 - EROSION AND SEDIMENT CONTROL PLAN
EC-04 - EROSION AND SEDIMENT CONTROL PLAN
DD-01 - DETAIL DRAWING
DD-02 - DETAIL DRAWING
DD-03 - DETAIL DRAWING
DD-04 - DETAIL DRAWING

SITE PLAN INFORMATION

WARE MALCOMB
250 UNIVERSITY AVE, SUITE 235
TORONTO, ON. M5H 3E5
PHONE: (437) 537-5700
WEBSITE: www.waremalcomb.com

SURVEYOR INFORMATION

R-PE SURVEYING LTD.
ONTARIO LAND SURVEYORS
643 CHRISLEA ROAD, SUITE 7
WOODBRIDGE, ON. L4L 8A3
PHONE: (416) 635-5000
WEBSITE: www.r-pe.ca

BENCHMARK INFORMATION:
ELEVATIONS ARE GEODETIC AND ARE REFERRED TO MTO VERTICAL BENCHMARK NUMBER 0081999991 HAVING AN ORTHOMETRIC ELEVATION OF 265.112 METRES. ELEVATIONS ARE REFERENCED TO THE CANADIAN GEODETIC VERTICAL DATUM OF 1928, 1978 ADJUSTMENT (CGVD-1928:1978).

SCALE:

SEAL

LICENSED PROFESSIONAL ENGINEER
A. JENKINS
NOV 15, 2021
PROVINCE OF ONTARIO

TOWN OF CALEDON

IBI GROUP
Unit 300 – 8133 Warden Avenue
Markham ON L6G 1B3 Canada
tel 905 763 2322 fax 905 763 9983
ibigroup.com

PROJECT
12304 HEART LAKE ROAD
CALEDON, ON. L7C 2J2

PROJECT NO: 135636	
DRAWN BY: NDS	CHECKED BY: JJ
PROJECT MGR: JJ	APPROVED BY: JJ

SHEET TITLE
GENERAL NOTES AND DETAILS

SHEET NUMBER	ISSUE
DD-03	01

File Location: J:\135636_1230414\Heart\7.0_Production\7.03_Design\04_Civil\Sheets\SPA\Phase 1\135636-SHT-DET-01.dwg Last Saved: November 13, 2021, by kevin.park Plotted: Sunday, November 14, 2021 6:42:44 PM by Nicolas Di Stefano